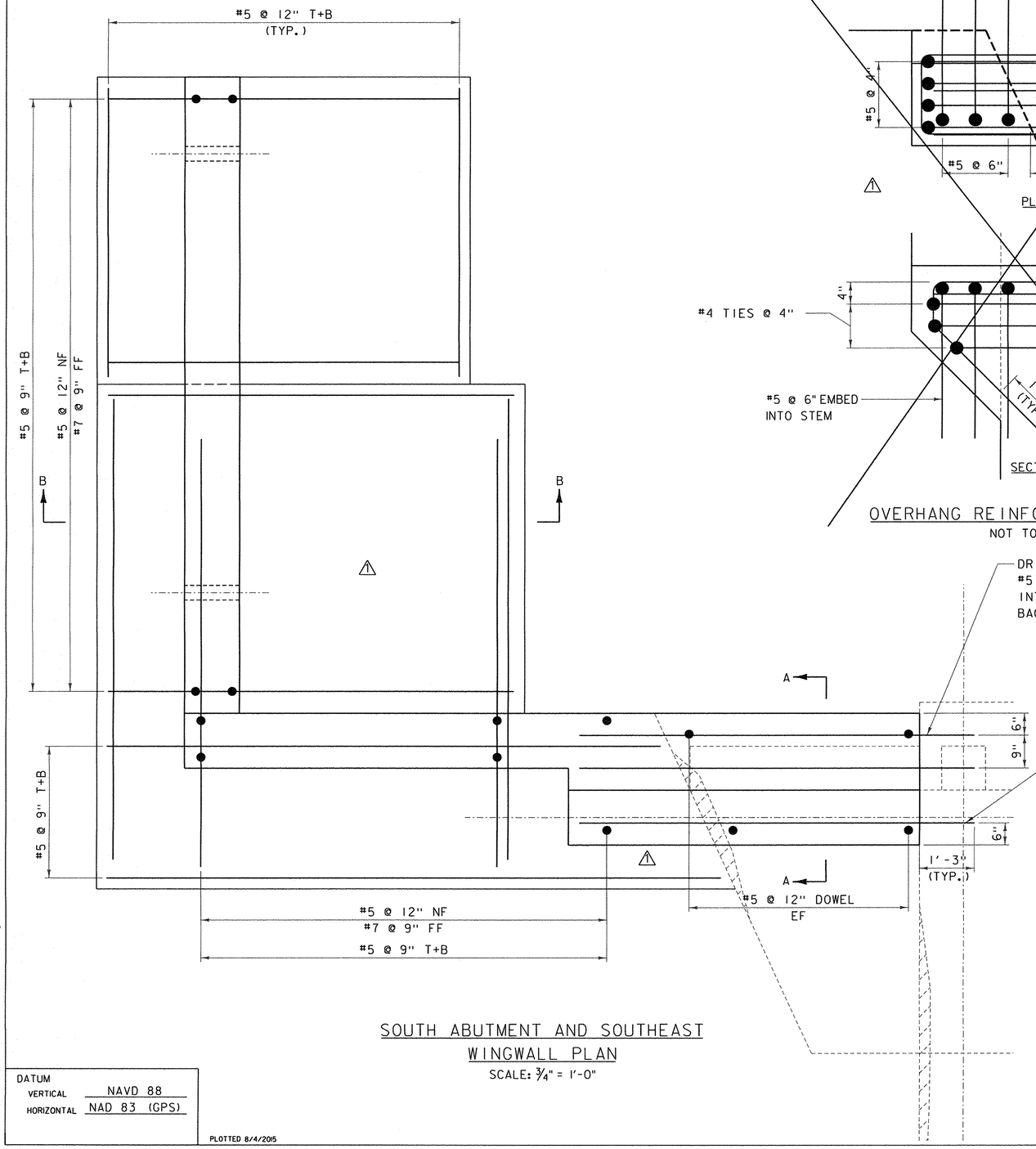

SOUTH ABUTMENT AND SOUTHEAST WINGWALL PLAN

SCALE: 3/4" = 1'-0"

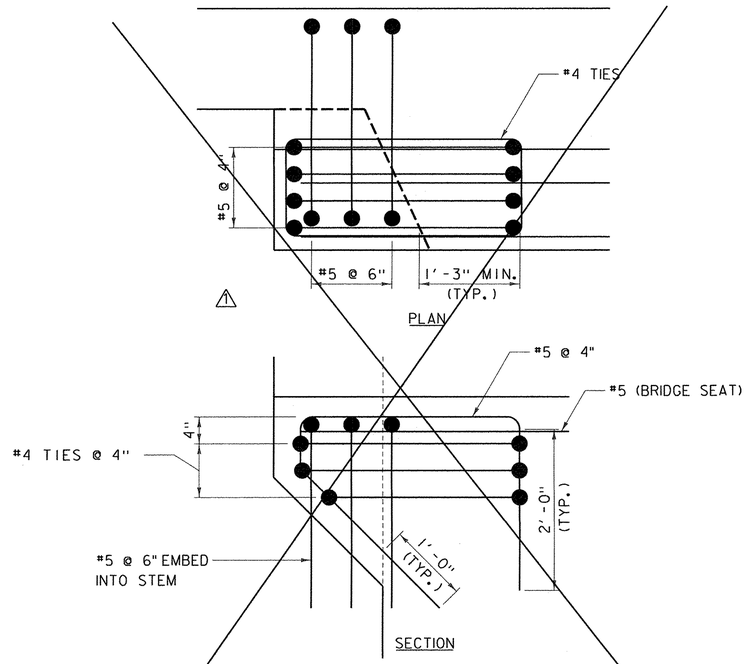

OVERHANG REINFORCEMENT DETAIL

NOT TO SCALE

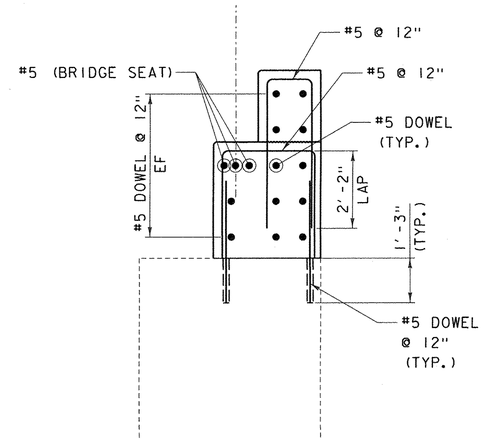

SECTION A-A

SCALE: 1/2" = 1'-0"

NOTE:

NF = NEAR FACE
FF = FAR FACE
EF = EACH FACE
T+B = TOP AND BOTTOM
▲ = CUT TO FIT IN FIELD
3" CLEAR, UNLESS OTHERWISE SPECIFIED ON THE PLANS.
2'-2" BAR LAP UNLESS OTHERWISE SPECIFIED ON THE PLANS.

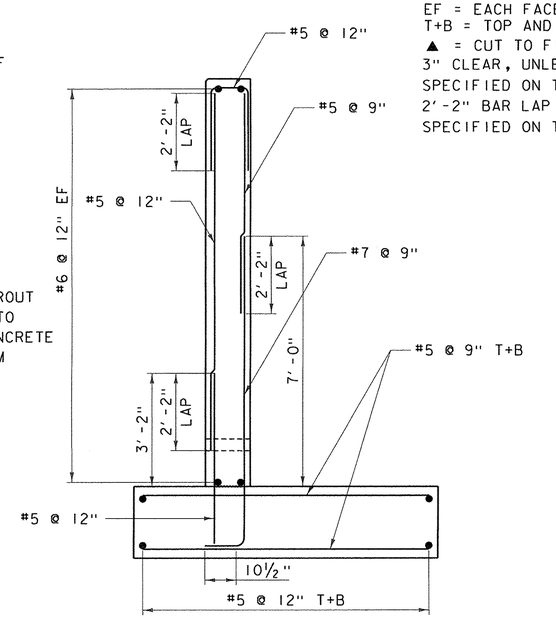

SECTION B-B

SCALE: 1/2" = 1'-0"

DATUM	
VERTICAL	NAVD 88
HORIZONTAL	NAD 83 (GPS)

PLOTTED 8/4/2015

I:\620922 - Waitsfield\DESIGN\CADD FILES\620922.SUB.dgn

DuBois & King inc.
ENGINEERING • PLANNING • MANAGEMENT • DEVELOPMENT
6 GREEN TREE DRIVE
SOUTH BURLINGTON, VT 05403
TEL: (802) 878-7661
FAX: (866) 783-7101
www.dubois-king.com
RANDOLPH, VT
SPRINGFIELD, VT
BEDFORD, NH
LACONIA, NH

© Copyright 2014 Dubois & King Inc.

PROFESSIONAL SEAL

FINAL PLANS

NO.	DATE	DESCRIPTION	BY	CKD
1	7/31/15	WALL UPDATES	PCB	EPD

TOWN OF WAITSFIELD
9 BRIDGE STREET
WAITSFIELD, VT

VILLAGE COVERED BRIDGE REHAB. & BRIDGE STREET STORMWATER IMPROVEMENTS

SHEET TITLE

SOUTH ABUTMENT & SOUTHEAST WINGWALL REINFORCING

DRAWN BY	DATE
RHB/JDG	DEC. 2014
CHECKED BY	D&K PROJECT #
RHD	620922
PROJ. ENG.	D&K ARCHIVE #
RHB	620922

SHEET NUMBER

19