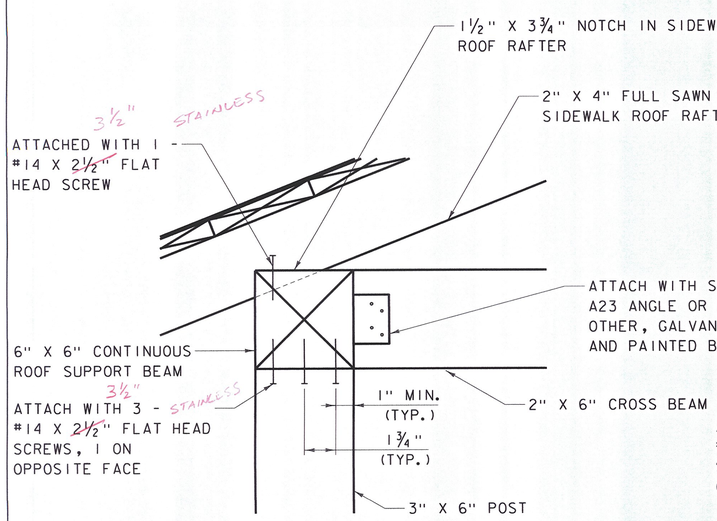

DETAIL A

SCALE: 3"=1'-0"

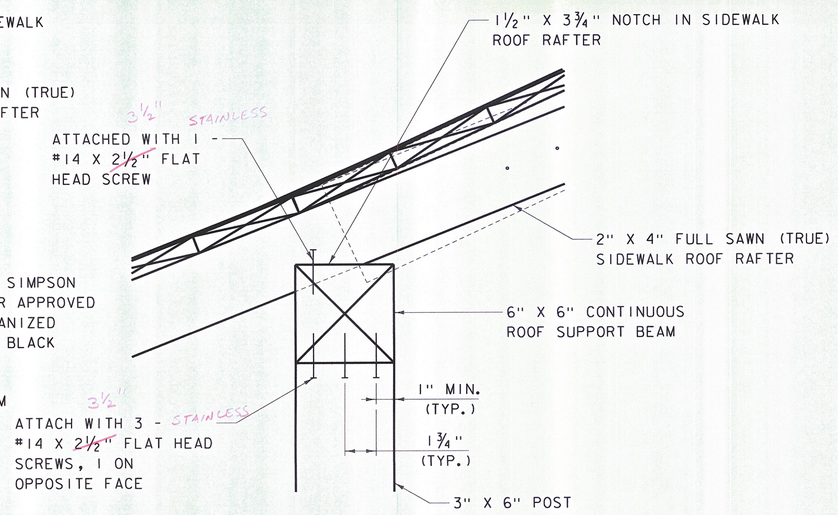

DETAIL B

SCALE: 3"=1'-0"

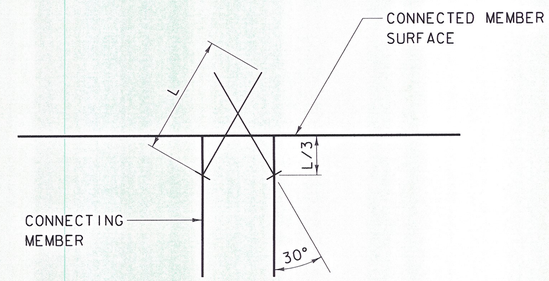

TOE-SCREW CONNECTION DETAIL

NOT TO SCALE

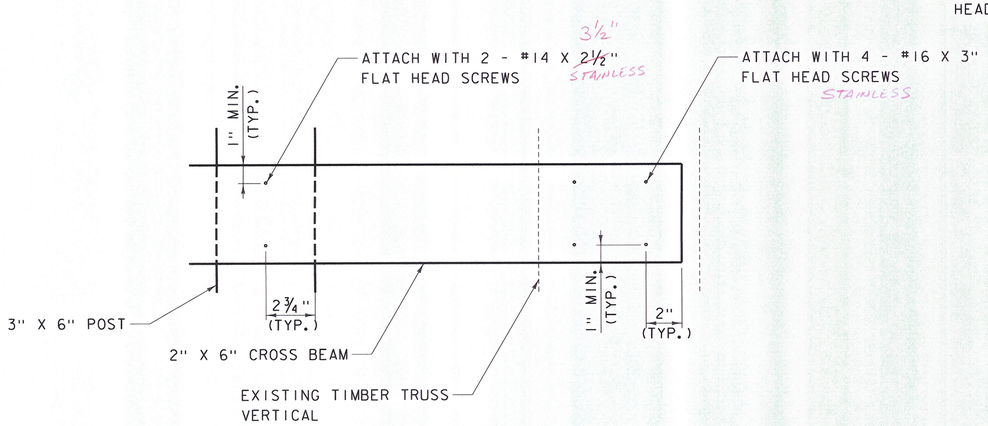

DETAIL C

SCALE: 3"=1'-0"

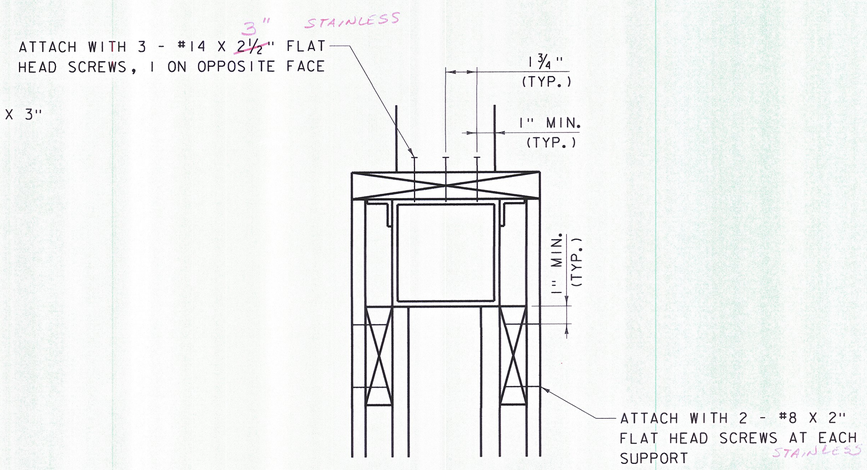

DETAIL D

SCALE: 3"=1'-0"

DATUM	
VERTICAL	NAVD 88
HORIZONTAL	NAD 83 (GPS)

PLOTTED 12/30/2014

H:\620922 - Waitsfield\DESIGN\CADD FILES\620922_SUP.dgn

DuBois & King inc.
ENGINEERING • PLANNING • MANAGEMENT • DEVELOPMENT
6 GREEN TREE DRIVE
SOUTH BURLINGTON, VT 05403
TEL: (802) 878-7661
FAX: (866) 783-7101
www.dubois-king.com
RANDOLPH, VT
SPRINGFIELD, VT
BEDFORD, NH
LACONIA, NH

© Copyright 2014 Dubois & King Inc.

PROFESSIONAL SEAL

FINAL PLANS

TOWN OF WAITSFIELD
9 BRIDGE STREET
WAITSFIELD, VT

VILLAGE COVERED BRIDGE REHAB. & BRIDGE STREET STORMWATER IMPROVEMENTS

SHEET TITLE

TIMBER CONNECTION DETAILS

DRAWN BY	DATE
RHB/JDG	DEC. 2014
CHECKED BY	D&K PROJECT #
RHD	620922
PROJ. ENG.	D&K ARCHIVE #
RHB	620922

SHEET NUMBER

14

SHEET 14 OF 30

12/2015