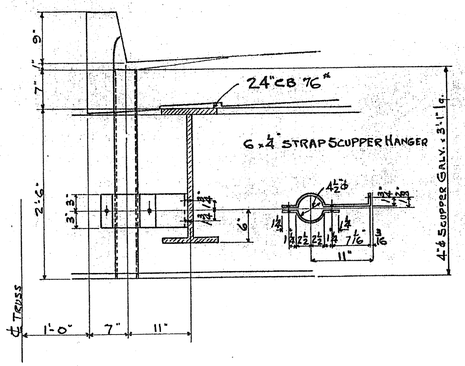

SCUPPER DETAIL 16-REAR.
SCALE 1" = 1'-0"

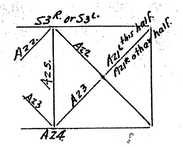

HALF SEC. "B-B"

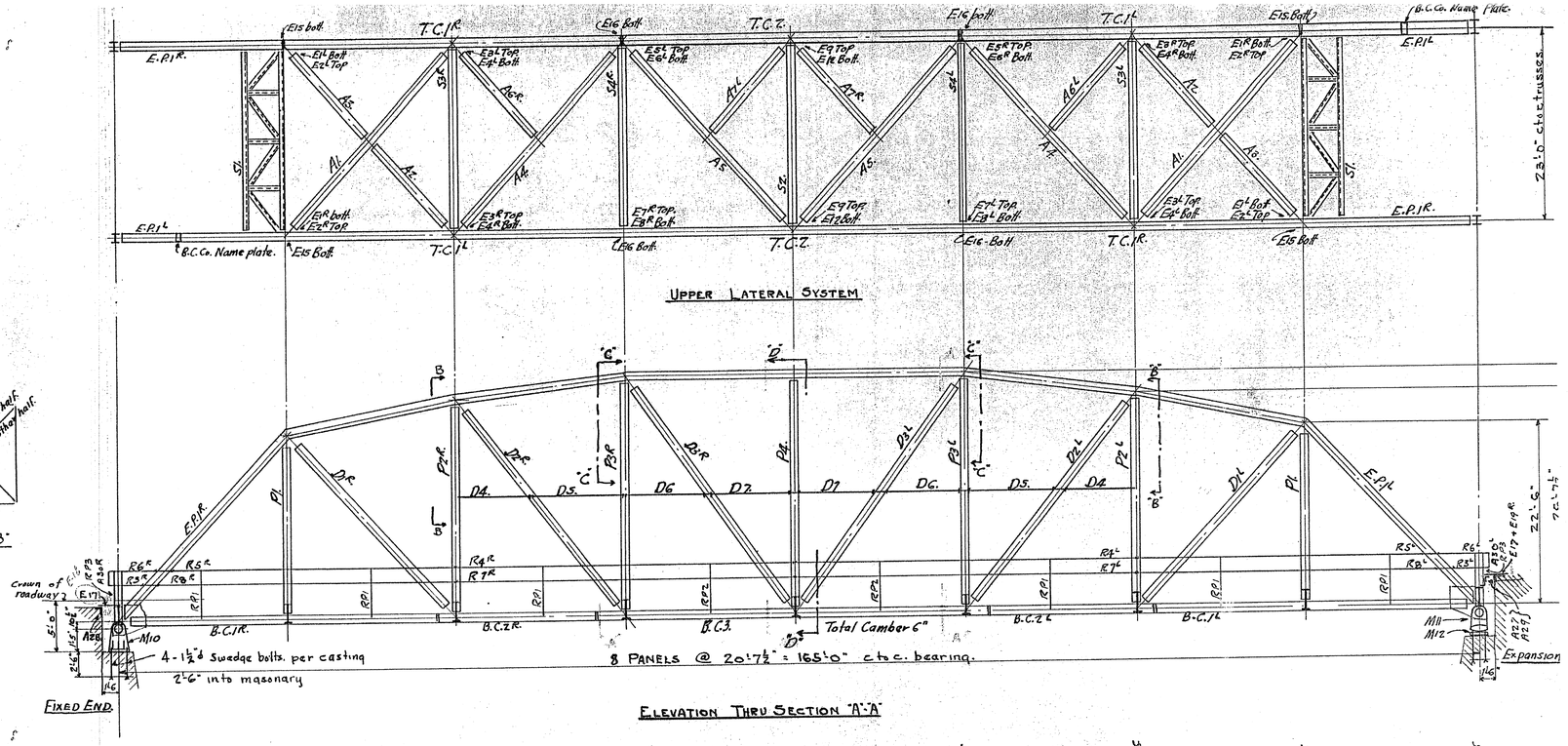

ELEVATION THRU SECTION "A"-"A"

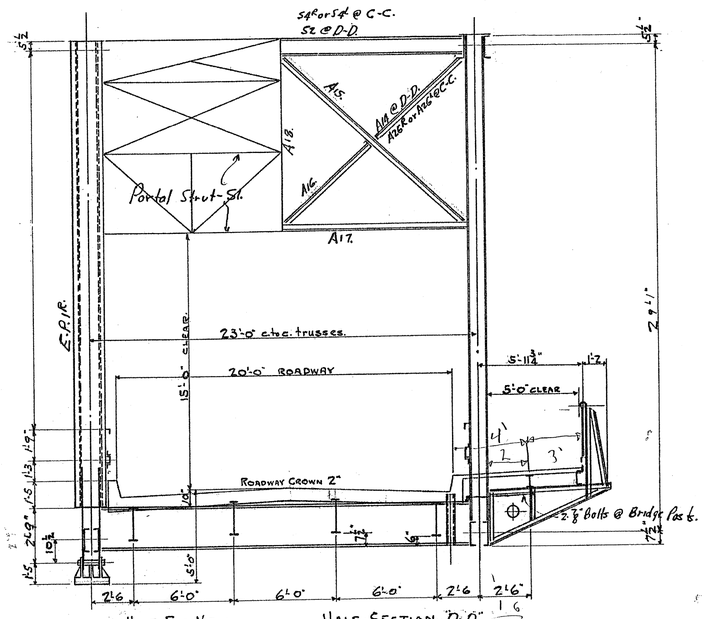

HALF END VIEW

HALF SECTION "D-D"
" " "C-C"

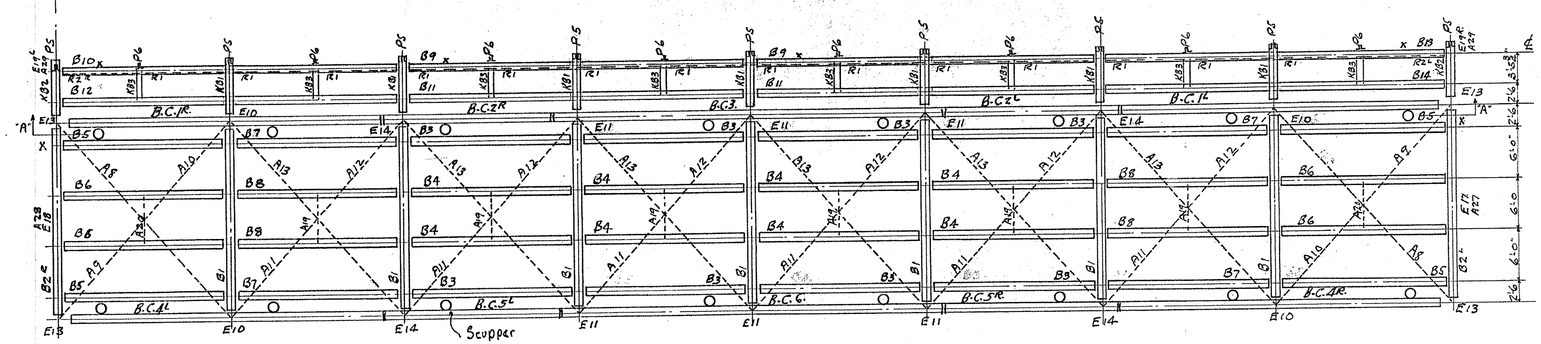

FLOOR AND LOWER LATERAL SYSTEM

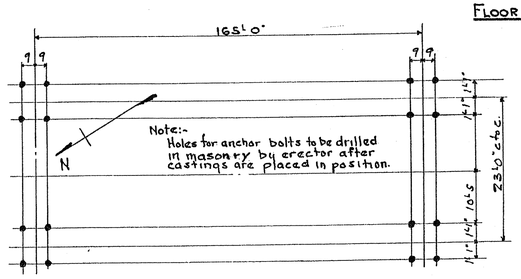

ANCHOR BOLT LOCATION DIAGRAM.

ERECTION NOTES:-
Under each casting 3 layers of duck are required to be laid exactly per specifications attached. Duck to be furnished by erector not B.C. Co.
All beams marked thus-"X" must be erected with X in position shown or steelwork will not fit.

TAYLOR STREET BRIDGE
MONTPELIER VERMONT

RIVETS	THE BERLIN CONSTRUCTION CO
HOLES	DRAWN BY PORTER DATE
FIELD CONNECTIONS: Main Connections Riveted Railing etc. Bolted	CHECKED BY DATE
SHOP PAINT: 1 Coat Red Lead & Oil as per specifications	SCALE 3/4"=1'-0" 1"=1'-0"
Field Paint By others	CONTRACT No. 815
	SHEET NO. 1 OF 6

TO BE INSPECTED.

1. Revised 4/29/29 marks
2. " 5/4/29 per checking & approval.