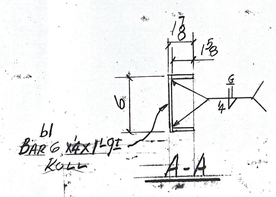

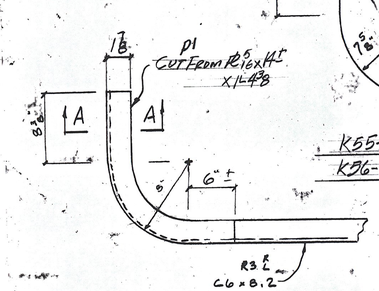

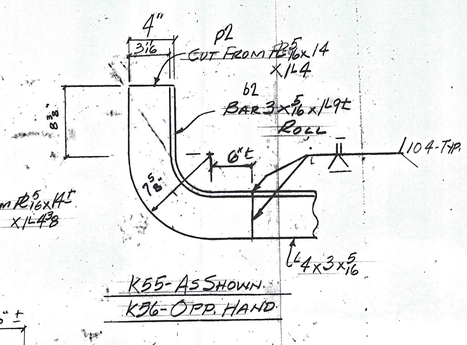

K55 - AS SHOWN.
K56 - OPP. HAND

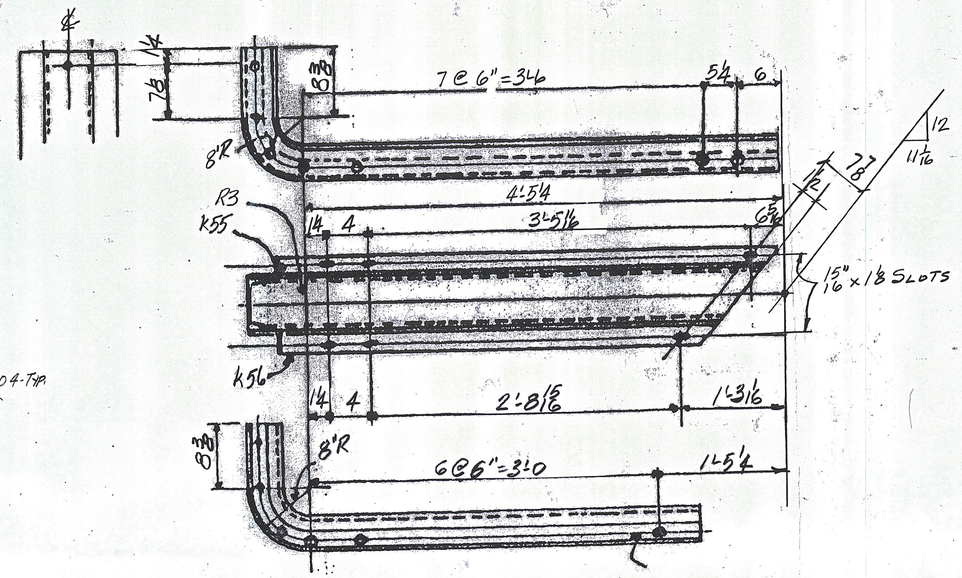

2 - RAILS R3R AS SHOWN
2 - " R3L - OPP HAND

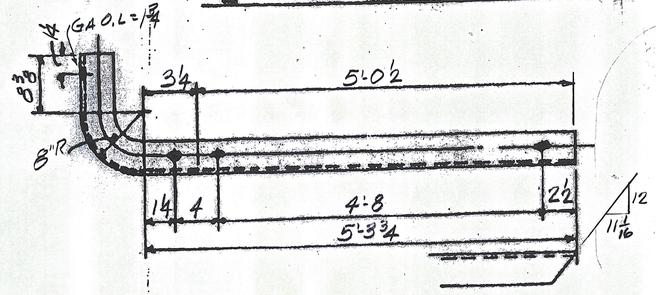

2 - RAILS R6R - AS SHOWN
2 - " R6L OPP HAND

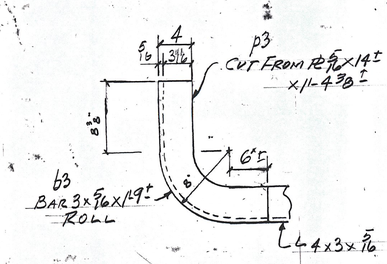

R6R - AS SHOWN
R6L - OPP. HAND

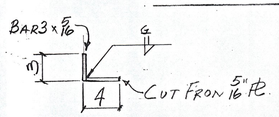

TYP. SECT @ L 4 x 3 x 5/16

ABM INFO PAGE	LINE	NO.	DESCRIPTION	FT	IN	ASSEM. MARK	SHIPPING MARK	REMARKS	WEIGHT
		2	C6 x 8.2	4	0±		R3R		
		2	DO	4	0±		R3L		
		4	BAR 6 x 1/4	1	9±	b1			
		8	PL 5/16 x 14±	1	4 3/8	p1			
		4	L 4 x 3 x 5/16	4	0±	K55 5/16			
		4	DO	3	0±	K56 5/16			
		8	BAR 3 x 5/16	1	9±	b2			
		8	PL 5/16 x 14	1	4	p2			
		2	L 4 x 3 x 5/16	4	10±		R6R		
		2	DO	4	10±		R6L		
		4	BAR 3 x 5/16	1	9±	b3			
		4	PL 5/16 x 14±	1	4 3/8±	p3			
			FOR SHOP & FIELD BOLTS SEE DWG S4						
			PAY ITEM 506.60						

SHOP BILL — JOB NO. 434 — DRG. NO. S4A

REV.	REMARKS	DATE	DWN	CHK	APP	Q.A.	NO.	DIA.	LGT	TYPE	WASHER
	OUT FOR APPROVAL	4/19/10									
	OUT FOR APPROVAL										
	ISSUED TO SHOP										
	FIELD & OFFICE										

PROJECT NO. BHF 6400 (31) STATE PROJECT NO.

MATERIAL: A270 / A270M-GR50 ELECTRODES: HOLES: AS NOTED. SHOP BOLTS: 5/8" P A325-TC GALV.

SURFACE PREP. & PAINT:
BLAST CLEAN - SP10
CARBOLINE #859 ORGANIC ZINC PRIMER 3 TO 5 DFT.

DESCRIPTION: BRIDGE RAIL

JOB: TH9 - TAYLOR ST. BRIDGE #5 MONTPELIER, VERMONT

CUSTOMER: WINTERSET

	DRAWN BY	DATE
	JPF	4-10
	CHKD BY	
	APPROV BY	
	Q.A.	

CASCO BAY STEEL STRUCTURES, INC.
75 SPRING HILL ROAD SACO, MAINE 04072
PHONE (207) 282-7360 FAX. (207) 282-1179

JOB NO. 434 DRG. NO. S4A REV. △

1" = 1'-0

☒ NO EXCEPTIONS TAKEN ☐ MAKE CORRECTIONS NOTED
☐ REJECTED ☐ REVISE & RESUBMIT
☐ SUBMIT SPECIFIED ITEM

CHECKING IS ONLY FOR GENERAL CONFORMANCE WITH THE DESIGN CONCEPT OF THE PROJECT AND GENERAL COMPLIANCE WITH THE INFORMATION GIVEN IN THE CONTRACT DOCUMENTS. ANY ACTION SHOWN IS SUBJECT TO THE REQUIREMENTS OF THE PLANS AND SPECIFICATIONS. CONTRACTOR IS RESPONSIBLE FOR DIMENSIONS WHICH SHALL BE CONFIRMED AND CORRELATED AT THE JOB SITE, FABRICATION PROCESSES AND TECHNIQUES OF CONSTRUCTION, COORDINATION OF THE WORK WITH THAT OF ALL OTHER TRADES AND THE SATISFACTORY PERFORMANCE OF THE WORK.

CLOUGH HARBOUR & ASSOCIATES LLP
ENGINEERS, SURVEYORS, PLANNERS
LANDSCAPE ARCHITECTS

DATE 4/23/10 BY

RECEIVED
CK'D BY CHA CK'D BY
APR 22 2010
RESUBMIT APPROVED ✓
BY WYB DATE 5/4/10