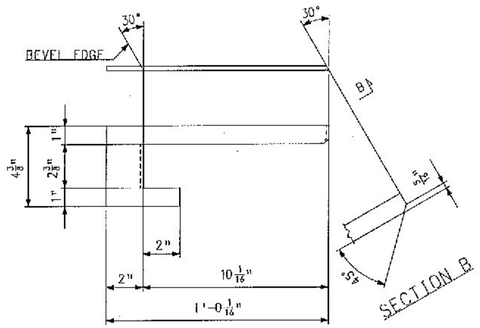

DRIP PLATE MK. x5a

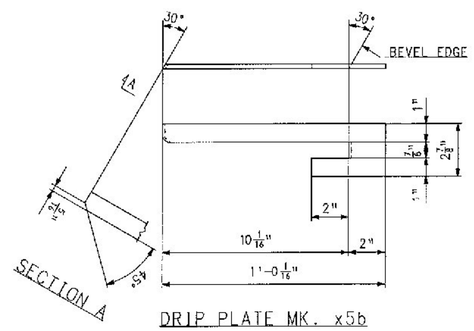

DRIP PLATE MK. x5b

FOR GENERAL SHOP NOTES, SEE DRAWING GN1.

BILL OF MATERIAL

QTY	MARK	COMM.	DESCRIPTION				LENGTH	SPEC	GRADE	TEST	REMARKS	ITEM	WEIGHT EA. (LBS)
1	x5a	PL	1/4	x	4 3/8		1 0 1/16	M270	50W			07003	4
1	x5b	PL	1/4	x	2 7/8		1 0 1/16	M270	50W			07003	2

Vermont Agency of Transportation
RECEIVED
CK'D BY J. CLARK OK'D BY J. GRIFFIN
February 12, 2013
RESUBMIT NO Approved
BY J. LACROIX DATE 02/25/2013

NO.	REVISION	BY	CHK'D	DATE
△				
△				
△				

HOLES: NONE
BOLTS: NONE
COATING: NONE
COCS (S): 30
SCALE: N.T.S.

HIGH STEEL STRUCTURES INC.
1915 Old Philadelphia Pike
Lancaster, PA 17505-0028
Phone (717) 299-5211
www.highsteel.com
An ISO 9001:2000 Certified Company
A MFI Unit of High Industries Inc.

GIRDER JOB STANDARDS
ROUTE NO. TH7 (BRIDGE ST.) OVER STEVENS BRANCH
ROUTE NO. TH7 STA. 13+05.00 TO STA. 14+25.00
BRIDGE NO. 11, TOWN OF BARRE, COUNTY OF WASHINGTON
STATE OF VERMONT
AGENCY OF TRANSPORTATION

STATE CONT. OR REF. NO.		FED. AID PROJ. NO.	
GENERAL CONTRACTOR	MILLER CONSTRUCTION, INC.	HSSI PROJ. MGR	KEN GLIDDEN
DRAWING MANAGER	JOSH VURRY (IH)	MADE BY: CDS	CHK'D. BY: SSL DATE 12/27/12
HSSI PROJECT NUMBER	S-1120266A-1	DRAWING NUMBER	X5 OF X5

VT

SH:PHENT 1 PWGENS: 5025751 PRO: 5025752 SHIPREFCT: 5025753
PLOTTED: WAOLZY Hinsiss DY: XXXXXXXX