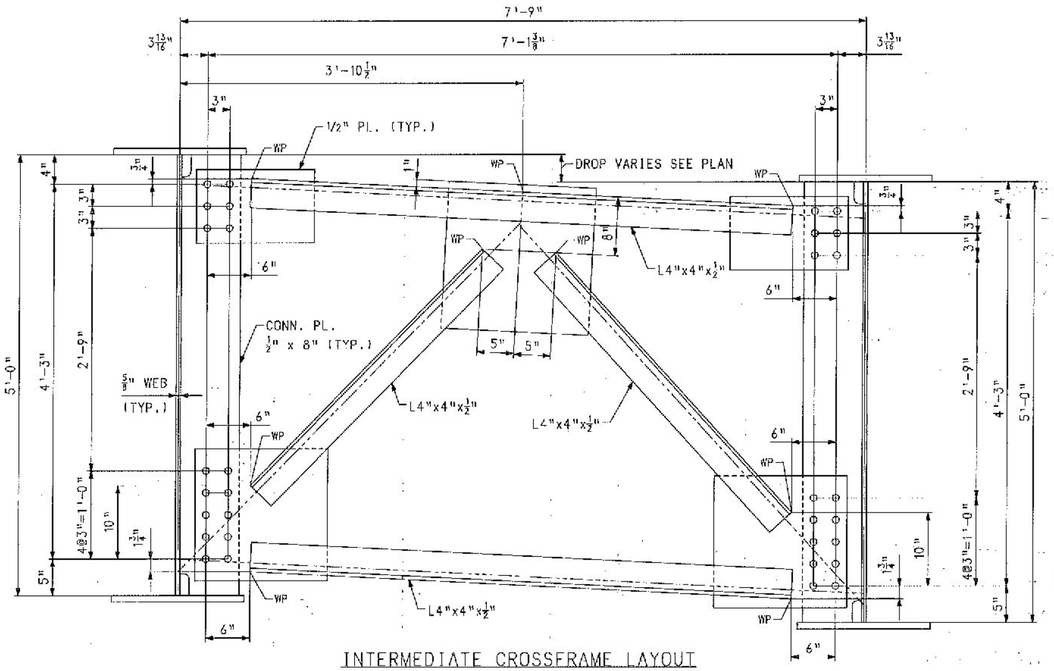

INTERMEDIATE CROSSFRAME LAYOUT

(LOOKING STATIONS AHEAD.)

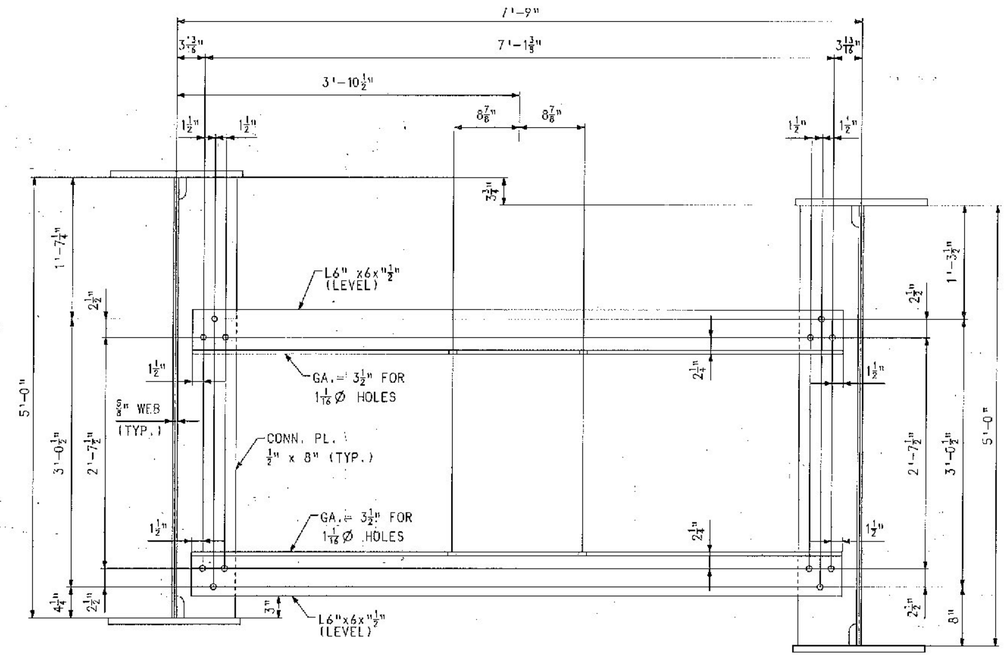

UTILITY SUPPORT LAYOUT

(LOOKING STATIONS AHEAD.)

(ALL HOLES TO BE 13/16" Ø IN CONN. PL. AND ANGLES U.N.)

Vermont Agency of Transportation

RECEIVED

CK'D BY J. CLARK OK'D BY J. GRIFFIN

February 12, 2013

RESUBMIT NO Approved

BY J. LACROIX DATE 02/25/2013

NO.	REVISION	BY	CHK'D	DATE
△				
△				
△				

HOLES: 15/16" Ø U.N.

BOLTS

COATING

CODE(S)

SCALE: N.T.S.

HIGH STEEL STRUCTURES INC.

1815 Old Philadelphia Pike Lancaster, PA 17602-6008 Phone (717) 299-5211 www.highsteel.com

An ISO 9001:2000 Certified Company — An Affiliate of High Industries Inc.

TYPICAL DETAILS - CROSSFRAME & UTILITY SUPPORT LAYOUTS

ROUTE NO. TH7 (BRIDGE ST.) OVER STEVENS BRANCH

ROUTE NO. TH7 STA. 13+05.00 TO STA. 14+25.00

BRIDGE NO. 11, TOWN OF BARRE, COUNTY OF WASHINGTON

STATE OF VERMONT

AGENCY OF TRANSPORTATION

STATE CONT. OR REF. NO. | FED. AID PROJ. NO.

GENERAL CONTRACTOR: MILLER CONSTRUCTION, INC. | HSS PROJ. MGR

VT

DRAWING MANAGER	JOSH VURRY (IR)	MADE BY	CDS	CHK'D BY	MGK	DATE	12/13/12
HSS PROJECT NUMBER	S-1120.266A-1	DRAWING NUMBER	TD2 OF TD2				

FOR GENERAL SHOP NOTES, SEE DRAWING GN1.

NOTE
THE PURPOSE OF THIS DRAWING IS TO COORDINATE GEOMETRIC CONTROL INFORMATION. THIS DRAWING IS SUBMITTED FOR INFORMATION ONLY AND IS NOT INTENDED FOR SHOP FABRICATION. THIS DRAWING IS FOR REFERENCE ONLY. APPROVAL IS NOT REQUIRED.

S:\PWENT | PWENG: 5025871 PRO: 5025872 SHIPAREC: 5025873
PLOTTED: MM/DD/YY hh:mmtss BY: XXXXXXXX