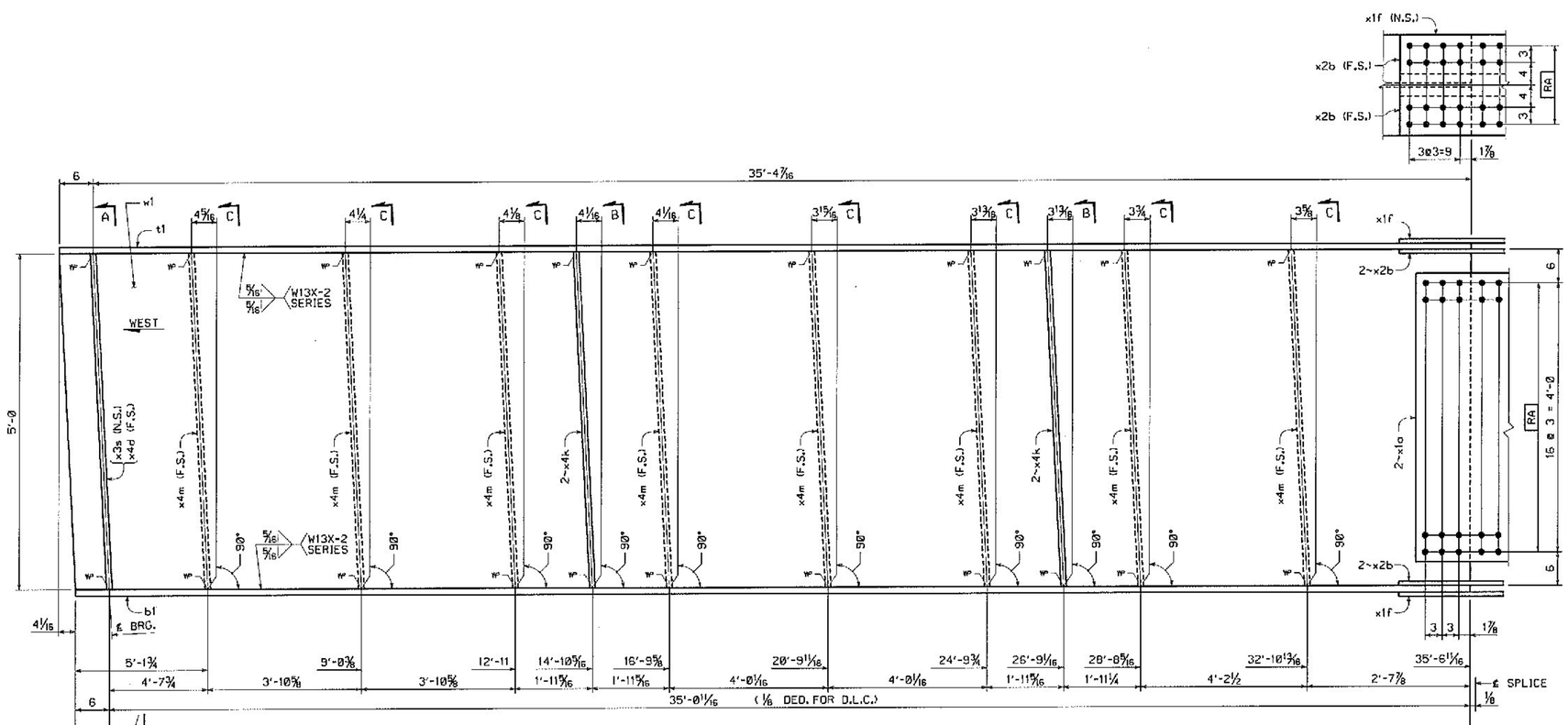

GIRDER ~ MK. G4A

FOR GENERAL SHOP NOTES, SEE DWG. GN1.
FOR WEB CAMBER DIAGRAM, SEE DWG. WC1.
FOR HORIZ. CURVE DIAGRAM, SEE DWG. HC1.

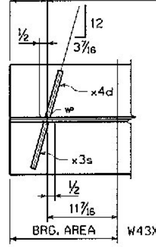

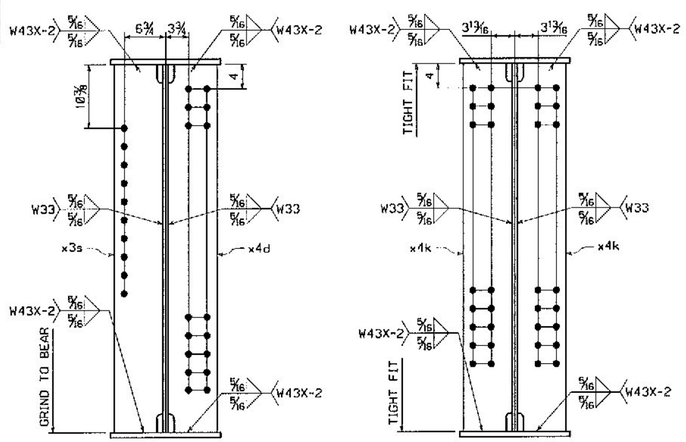

SECTION A
(DEVELOPED)

SECTION B

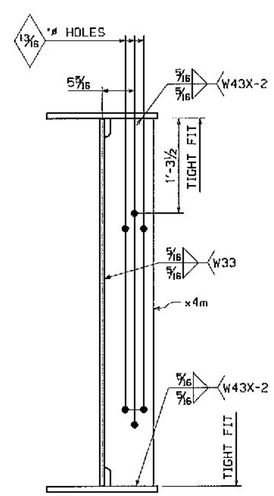

SECTION C

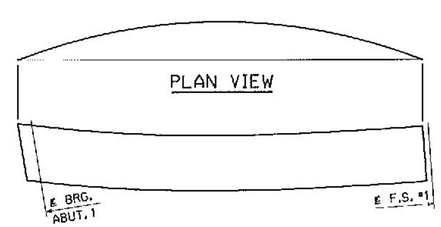

ORIENTATION DIAGRAM

BILL OF MATERIAL

QTY EA.	MARK	COMM	DESCRIPTION	LENGTH	SPEC	GRADE	TEST	REMARKS	ITEM	SHIP WT. EA. (LBS)
1	G4A		GIRDER							9842
1	w1	PL	5/8 x 60	35 10 3/4	M270	50W	T		03005	
1	t1	PL	7/8 x 18	35 10 7/16	M270	50W	T		04014	
1	b1	PL	7/8 x 18	35 6 11/16	M270	50W	T		04014	
2	x1a	PL	5/16 x 51 1/2	1 7 1/2	M270	50W	T		06001	
2	x1f	PL	1/2 x 18	2 1 1/2	M270	50W	T		06005	
4	x2b	PL	1/2 x 7	2 1 1/2	M270	50W	T		06009	
1	x3s	PL	3/4 x 8	5 0 3/8	M270	50W	T		07001	
1	x4d	PL	3/4 x 8	5 0 3/8	M270	50W	T		07001	
4	x4k	PL	1/2 x 8	5 0 1/8	M270	50W	T		07002	
8	x4m	PL	1/2 x 8	5 0 1/8	M270	50W	T		07002	

Vermont Agency of Transportation
RECEIVED
CK'D BY J. CLARK OK'D BY J. GRIFFIN
February 12, 2013
RESUBMIT NO Approved
BY J. LACROIX DATE 02/25/2013

NO.	REVISION	BY	CHK'D	DATE
△				
△				
△				

HOLES 13/16" ø (U.N.)
BOLTS NONE
COATING NONE
CODE(S) 30
SCALE N.T.S.

HIGH STEEL STRUCTURES INC.
An Affiliate of High Industries Inc.
An ISO 9001:2000 Certified Company
Lancaster Facility: 845 Ste. Phillipe/Mills Pike, Lancaster, PA 17603-3308, Phone (717) 299-5201
Williamsport Facility: 3501 W. 4th Street, Williamsport, PA 17701, Phone (570) 326-5251
www.highsteel.com

GIRDER G4A
ROUTE NO. TH7 (BRIDGE ST.) OVER STEVENS BRANCH
ROUTE NO. TH7 STA. 13+05.00 TO STA. 14+25.00
BRIDGE NO. 11, TOWN OF BARRE, COUNTY OF WASHINGTON
STATE OF VERMONT
AGENCY OF TRANSPORTATION

STATE CONT. OR REF. NO.		FED. AID PROJ. NO.	
GENERAL CONTRACTOR	MILLER CONSTRUCTION, INC.	HSSI PROJ. MGR	KEN GLIDDEN
DRAWING MANAGER	JOSH MURRY (IH)	MADE BY CDS	CHK'D. BY MGK DATE 12/28/12
HSSI PROJECT NUMBER	S-1120266A-1	DRAWING NUMBER	4 OF 14

VT

ENGLISH
SHIPMENT 01 PMS&NO: 0000000 PRG: 0000000 SHIP&ERECT: 0000000
PLOTTED: 1/4/2013 10:56:57 AM BY: JSpiker