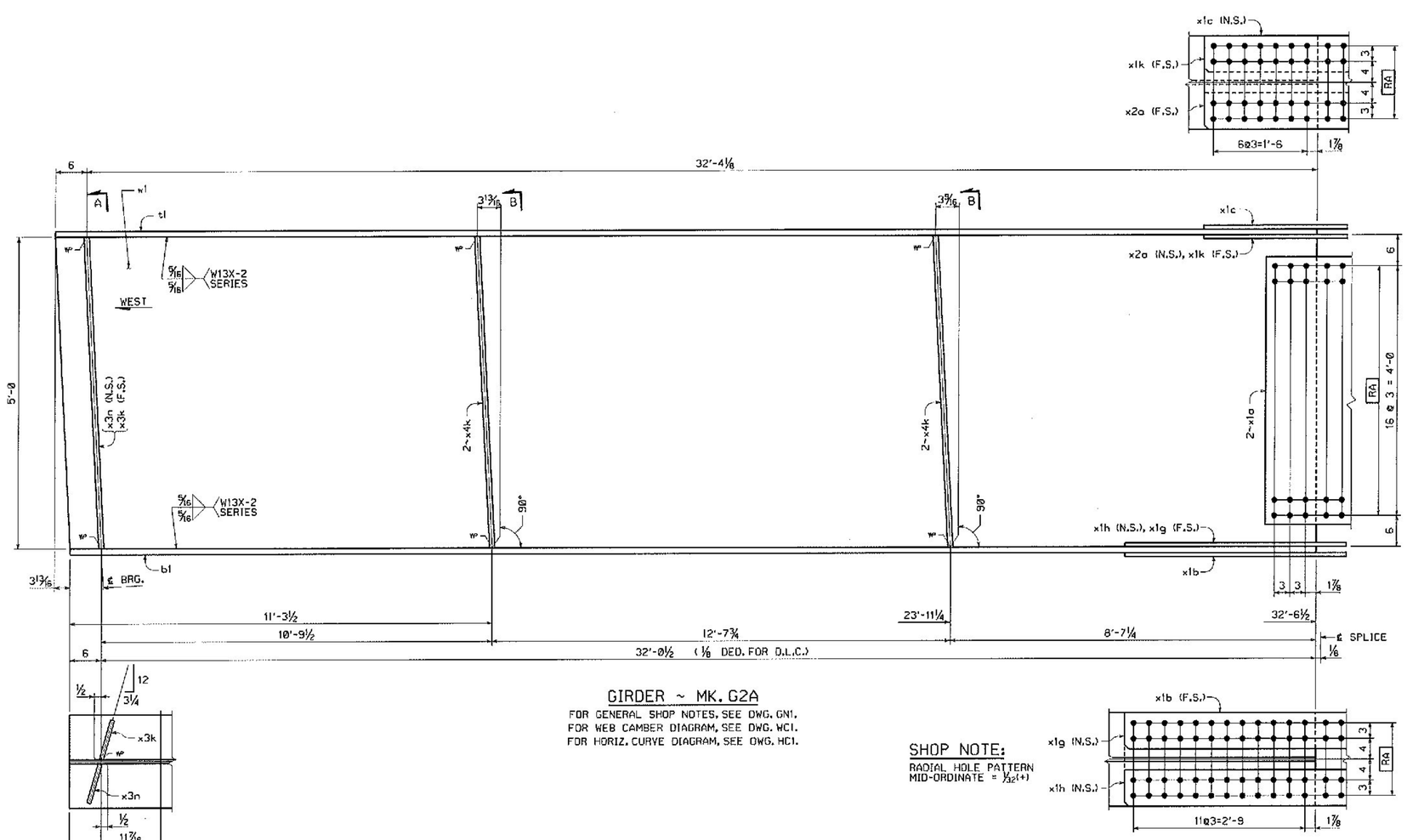

GIRDER ~ MK. G2A

FOR GENERAL SHOP NOTES, SEE DWG. GN1.
FOR WEB CAMBER DIAGRAM, SEE DWG. WC1.
FOR HORIZ. CURVE DIAGRAM, SEE DWG. HC1.

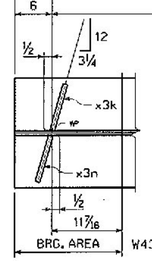

SHOP NOTE:

RADIAL HOLE PATTERN
MID-ORDINATE = 1/32(+)

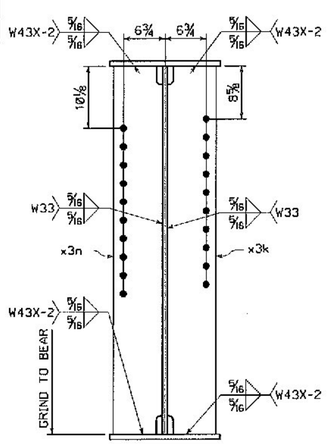

SECTION A
(DEVELOPED)

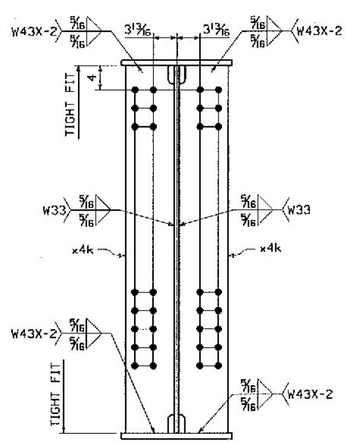

SECTION B

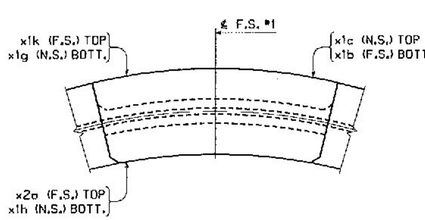

SPLICE PLATE ORIENTATION

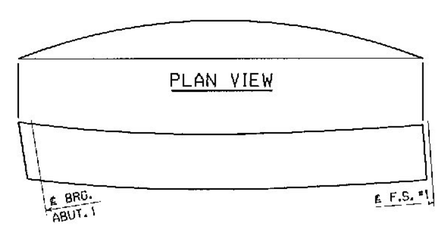

ORIENTATION DIAGRAM

BILL OF MATERIAL

QTY EA.	MARK	COMM	DESCRIPTION	LENGTH	SPEC	GRADE	TEST	REMARKS	ITEM	SHIP WT. EA. (LBS)
1	G2A		GIRDER							13611
1	w1	PL	5/8 x 60	32 10 5/16	M270	50W	T		03007	
1	t1	PL	1 3/8 x 18	32 10 1/8	M270	50W	T		04007	
1	b1	PL	2 3/8 x 18	32 6 1/2	M270	50W	T		04005	
2	x1a	PL	5/16 x 51 1/2	1 7 1/2	M270	50W	T		06001	
1	x1b	PL	1 3/8 x 18	6 1 1/2	M270	50W	T	WIDTH & LENGTH AROUND CURVE	06002	
1	x1c	PL	7/8 x 18	3 7 1/2	M270	50W	T	WIDTH & LENGTH AROUND CURVE	06003	
1	x1g	PL	1 3/8 x 7	6 1 1/2	M270	50W	T	WIDTH & LENGTH AROUND CURVE	06006	
1	x1h	PL	1 3/8 x 7	6 1 1/2	M270	50W	T	WIDTH & LENGTH AROUND CURVE	06008	
1	x1k	PL	7/8 x 7	3 7 1/2	M270	50W	T	WIDTH & LENGTH AROUND CURVE	06007	
1	x2a	PL	7/8 x 7	3 7 1/2	M270	50W	T	WIDTH & LENGTH AROUND CURVE	06007	
1	x3k	PL	3/4 x 8	5 0 5/16	M270	50W	T		07001	
1	x3n	PL	3/4 x 8	5 0 5/16	M270	50W	T		07001	
4	x4k	PL	1/2 x 8	5 0 1/8	M270	50W	T		07002	

Vermont Agency of Transportation
RECEIVED
CK'D BY J. CLARK OK'D BY J. GRIFFIN
February 12, 2013
RESUBMIT NO Approved
BY J. LACROIX DATE 02/25/2013

NO.	REVISION	BY	CHK'D	DATE
△				
△				
△				

HOLES: 15/16" ø (U.N.)
BOLTS: NONE
COATING: NONE
CODE(S): 30
SCALE: N.T.S.

HIGH STEEL STRUCTURES INC.
An ISO 9001:2000 Certified Company
An Affiliate of High Industries Inc.
Lancaster Facility: 915 Old Philadelphia Pike, Lancaster, PA 17602-2002, Phone (717) 299-7301
Williamsport Facility: 1500 W. 15th Street, Williamsport, PA 17701, Phone (570) 326-9651
www.highsteel.com

GIRDER G2A
ROUTE NO. TH7 (BRIDGE ST.) OVER STEVENS BRANCH
ROUTE NO. TH7 STA. 13+85.00 TO STA. 14+25.00
BRIDGE NO. 11, TOWN OF BARRE, COUNTY OF WASHINGTON
STATE OF VERMONT
AGENCY OF TRANSPORTATION

STATE CONT. OR REF. NO.: | FED. AID PROJ. NO.:
GENERAL CONTRACTOR: MILLER CONSTRUCTION, INC. | HSSI PROJ. MGR: KEN GLIDDEN
DRAWING MANAGER: JOSH MURRY (IH) | MADE BY: CDS | CHK'D. BY: MGK | DATE: 12/28/12
HSSI PROJECT NUMBER: S-1120266A-1 | DRAWING NUMBER: 2 OF 14

VT

ENGLISH
SHIPMENT 01 PMBENG: 50025751 PRD: 50025752 SHIPERECT.: 50025753
BY: JSpiker
PLOTTED: 1/4/2013 10:25:38 AM
50