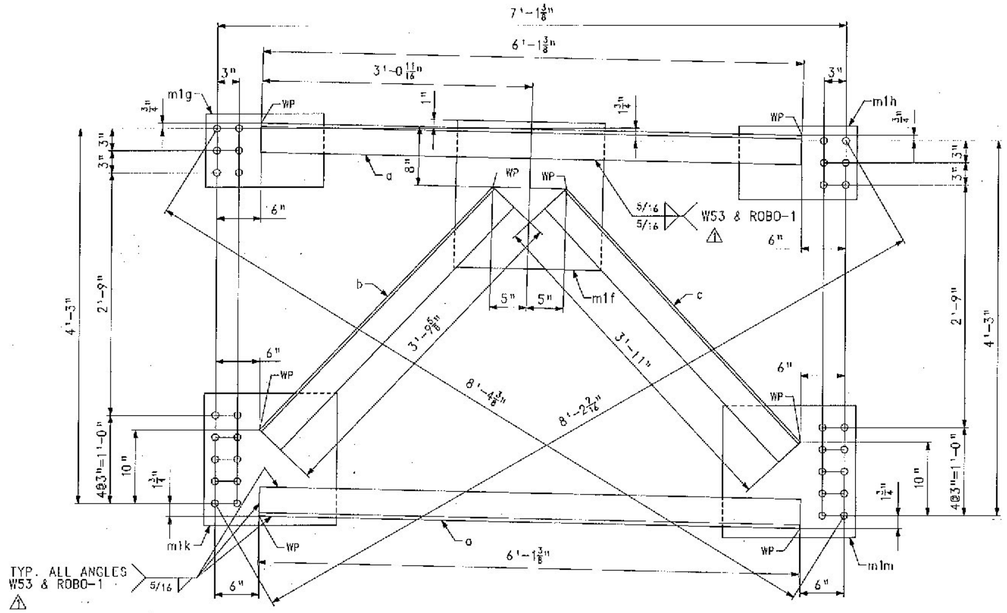

CROSSFRAME MK. CF3

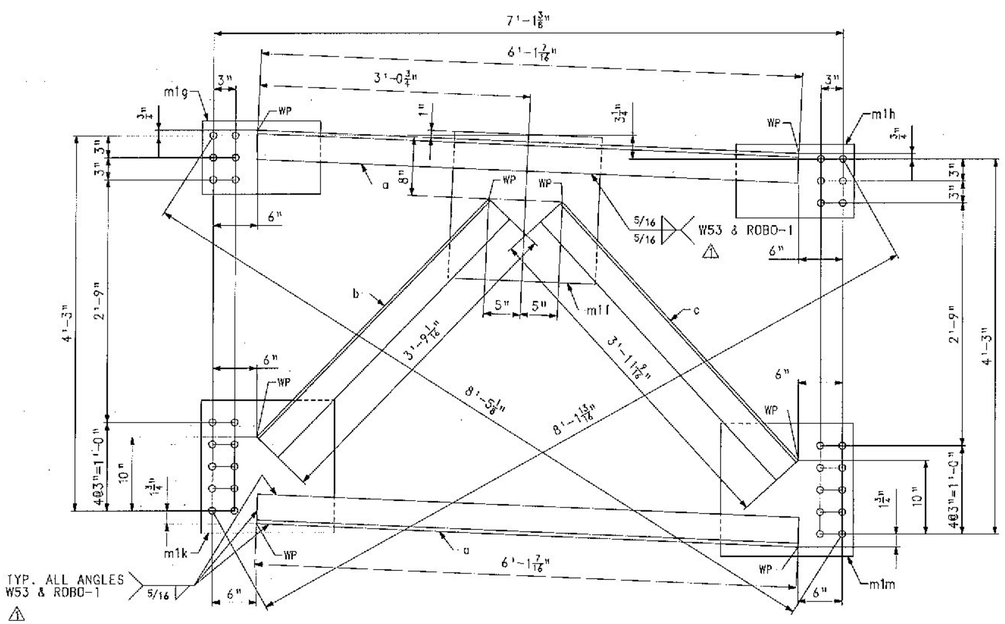

CROSSFRAME MK. CF4

BILL OF MATERIAL

QTY	MARK	COMM.	DESCRIPTION					LENGTH		SPEC	GRADE	TEST	REMARKS	ITEM	WEIGHT EA. (LBS)
9	CF3		CROSSFRAME												447
2	a	L	4	x	4	x	1/2	6	1 3/8	M270	50W	T		11001	
1	b	L	4	x	4	x	1/2	3	9 5/8	M270	50W	T		11001	
1	c	L	4	x	4	x	1/2	3	11	M270	50W	T		11001	
1	m1g	PL	1/2	x	10			1	4	M270	50W	T		11002	
1	m1h	PL	1/2	x	10			1	4	M270	50W	T		11002	
1	m1k	PL	1/2	x	18			1	6	M270	50W	T		11002	
1	m1m	PL	1/2	x	18			1	6	M270	50W	T		11002	
1	m1f	PL	1/2	x	20			1	8	M270	50W	T		11002	
9	CF4		CROSSFRAME												447
2	a	L	4	x	4	x	1/2	6	1 7/16	M270	50W	T		11001	
1	b	L	4	x	4	x	1/2	3	9 1/16	M270	50W	T		11001	
1	c	L	4	x	4	x	1/2	3	11 9/16	M270	50W	T		11001	
1	m1g	PL	1/2	x	10			1	4	M270	50W	T		11002	
1	m1h	PL	1/2	x	10			1	4	M270	50W	T		11002	
1	m1k	PL	1/2	x	18			1	6	M270	50W	T		11002	
1	m1m	PL	1/2	x	18			1	6	M270	50W	T		11002	
1	m1f	PL	1/2	x	20			1	8	M270	50W	T		11002	

Vermont Agency of Transportation
RECEIVED
CK'D BY J. CLARK OK'D BY J. GRIFFIN
February 12, 2013
RESUBMIT NO Approved
BY J. LACROIX DATE 02/25/2013

NO.	REVISION	BY	CHK'D	DATE
1	DETAIL ERROR: REV: WELD DESIGNATION	SSL	MGK	2-5-13

HOLES 15/16" Ø
BOLTS NONE
COATING NONE
CODE(S) 63
SCALE N.T.S.

HIGH STEEL STRUCTURES INC.
1915 Old Philadelphia Pike Lancaster, PA 17602-2897
Phone (717) 299 5211 www.highsteel.com
An ISO 9001:2000 Certified Company
An Affiliate of High Industries Inc.

CROSSFRAMES CF3 & CF4
ROUTE NO. TH7 (BRIDGE ST.) OVER STEVENS BRANCH
ROUTE NO. TH7 STA. 13+05.00 TO STA. 14+25.00
BRIDGE NO. 11, TOWN OF BARRE, COUNTY OF WASHINGTON
STATE OF VERMONT
AGENCY OF TRANSPORTATION

STATE CONT. OR REF. NO.
FED. AID PROJ. NO.
GENERAL CONTRACTOR: MILLER CONSTRUCTION, INC.
HSSI PROJ. MGR.

VT
DRAWING MANAGER: JOSH MURRY (IH) MADE BY: CDS CHK'D BY: MGK DATE: 12/27/12
HSSI PROJECT NUMBER: S-1120.266A-1 DRAWING NUMBER: 13 OF 14

FOR GENERAL SHOP NOTES, SEE DRAWING GN1.

SHIPMENT : PMDWG: 5025872 PRO: 5025872 S:\PROJECT: 5025872
PLOTTED: MM/DD/YY hh:mmss BY: XXXXXXXX