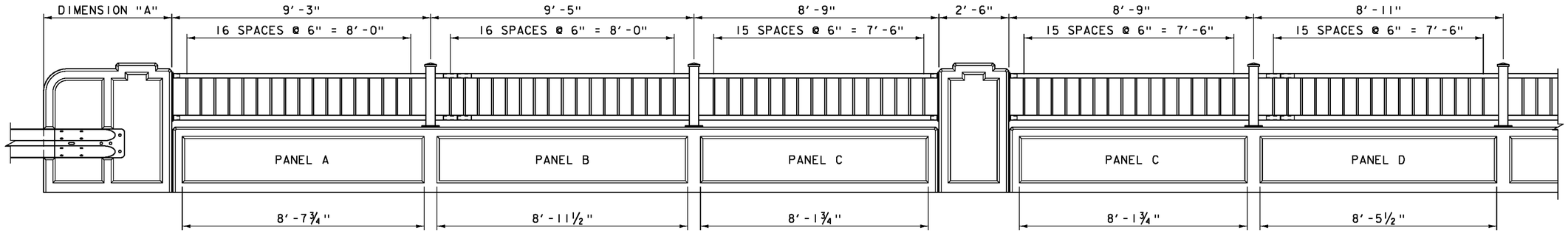

BRIDGE RAIL ELEVATION (INTERIOR FACE)

SCALE: ½" = 1'-0"

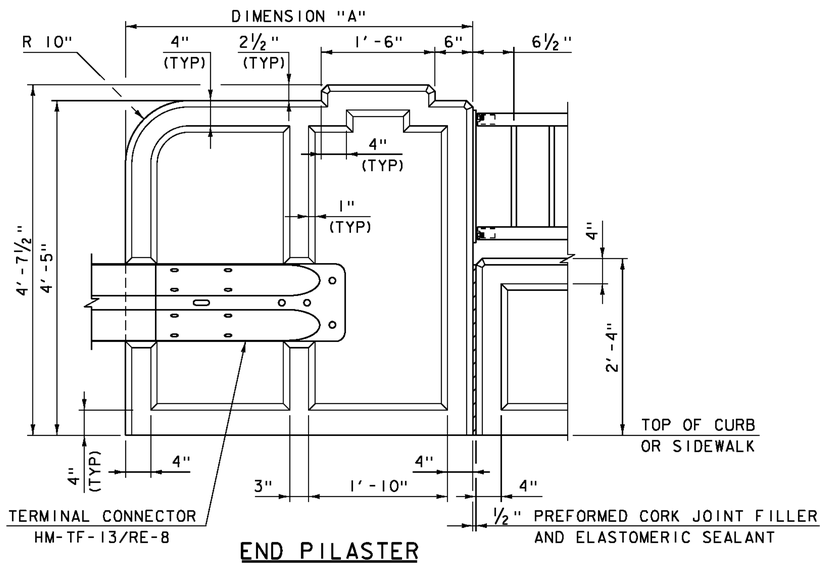

END PILASTER

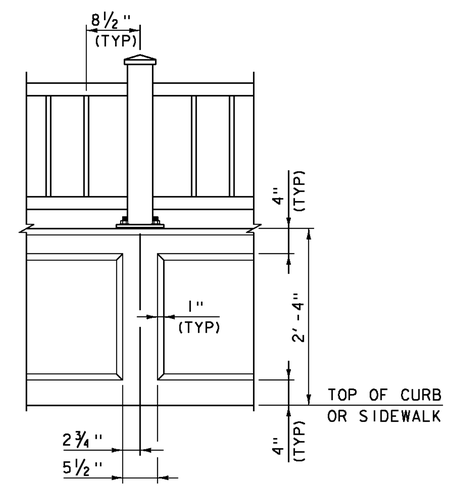

POST

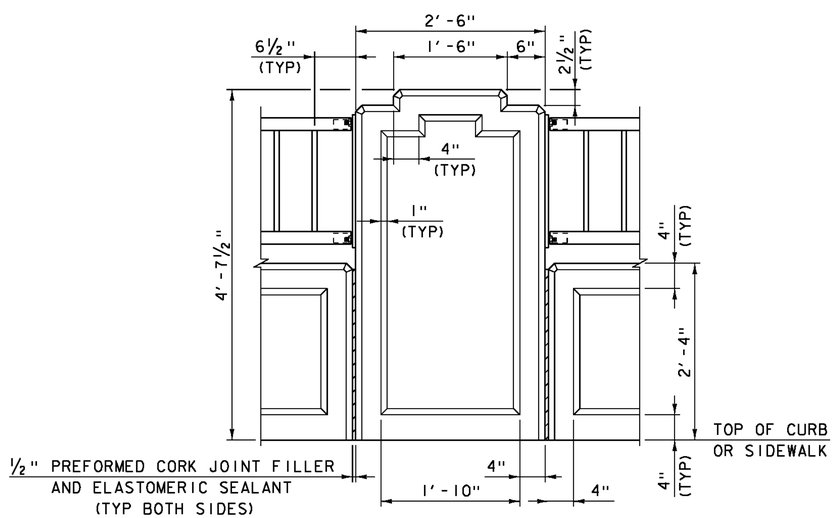

INTERMEDIATE PILASTER

BRIDGE RAIL CONCRETE DETAILS

SCALE: 1" = 1'-0"

DIMENSION "A"

WINGWALL NO.	EXTERIOR FACE	INTERIOR FACE
1	4'-2⅞"	4'-5⅞"
2	4'-8⅞"	4'-5¼"
3	4'-3⅝"	4'-5⅞"
4	4'-7⅞"	4'-5¼"

BRIDGE RAIL NOTES

1. ALL DIMENSIONS TO FACE OF CONCRETE UNLESS NOTED OTHERWISE.
2. RAIL POSTS SHALL BE SET NORMAL TO GRADE.
3. PAYMENT SHALL BE MADE UNDER PAY ITEM 900.640 SPECIAL PROVISION (BRIDGE RAILING, GALVANIZED METAL HAND RAILING/CONCRETE PARAPET COMBINATION).
4. REINFORCING STEEL SHALL CONFORM TO SECTION 507 FOR LEVEL II REINFORCMENT. PAYMENT SHALL BE MADE UNDER PAY ITEM SPECIAL PROVISION (BRIDGE RAILING, GALVANIZED METAL HAND RAILING/CONCRETE PARAPET COMBINATION).
5. METAL HAND RAILING, TO INCLUDE STEEL PIPES, PLATES AND HARDWARE, SHALL BE PAID FOR UNDER ITEM SPECIAL PROVISION(BRIDGE RAILING, GALVANIZED METAL HAND RAILING/CONCRETE PARAPET COMBINATION).
6. STEEL PIPES FOR POSTS, TOP AND BOTTOM RAIL AND PALINGS SHALL BE SEAMLESS, CONFORMING TO SUBSECTION 732.01.
7. STEEL FOR BASE AND ANCHORAGE PLATES SHALL CONFORM TO SUBSECTION 732.03(b).
8. HARDWARE FOR ANCHOR BOLT ASSEMBLIES SHALL CONFORM TO SUBSECTION 732.03(d).
9. ⅛" PAD SHALL CONFORM TO SUBSECTION 731.01 OR 731.02.
10. ALL EXPOSED CUT OR SHEARED EDGES OF STEEL COMPONENTS SHALL BE ROUNDED TO A 1/16" RADIUS AND BE FREE OF BURRS.
11. ALL PARTS SHALL BE GALVANIZED AFTER FABRICATION IN ACCORDANCE WITH AASHTO M 111M/M 111, EXCEPT HARDWARE, WHICH SHALL MEET THE REQUIREMENTS OF AASHTO M 232M/M 232.
12. ALL PARTS EXCEPT HARDWARE AND ANCHORAGE PLATES SHALL BE PAINTED BLACK (COLOR CHIP #27038).
13. RAIL POST ANCHORING NUTS SHALL BE TIGHTENED TO A SNUG FIT AND GIVEN AN ADDITIONAL ONE-EIGHTH TURN.
14. THE FABRICATOR SHALL SUBMIT FABRICATION DRAWINGS INCLUDING WELDING PROCEDURES FOR METAL HAND RAILING IN ACCORDANCE WITH SECTION 105.

PROJECT NAME: BARRE TOWN
PROJECT NUMBER: BRF 6100(7)

FILE NAME: s06j002raildet.dgn
PROJECT LEADER: J. LACROIX
DESIGNED BY: G. ROY
BRIDGE RAIL CONCRETE DETAILS

PLOT DATE: 27-SEP-2012
DRAWN BY: G. ROY
CHECKED BY: J. SALVATORI
SHEET 31 OF 70