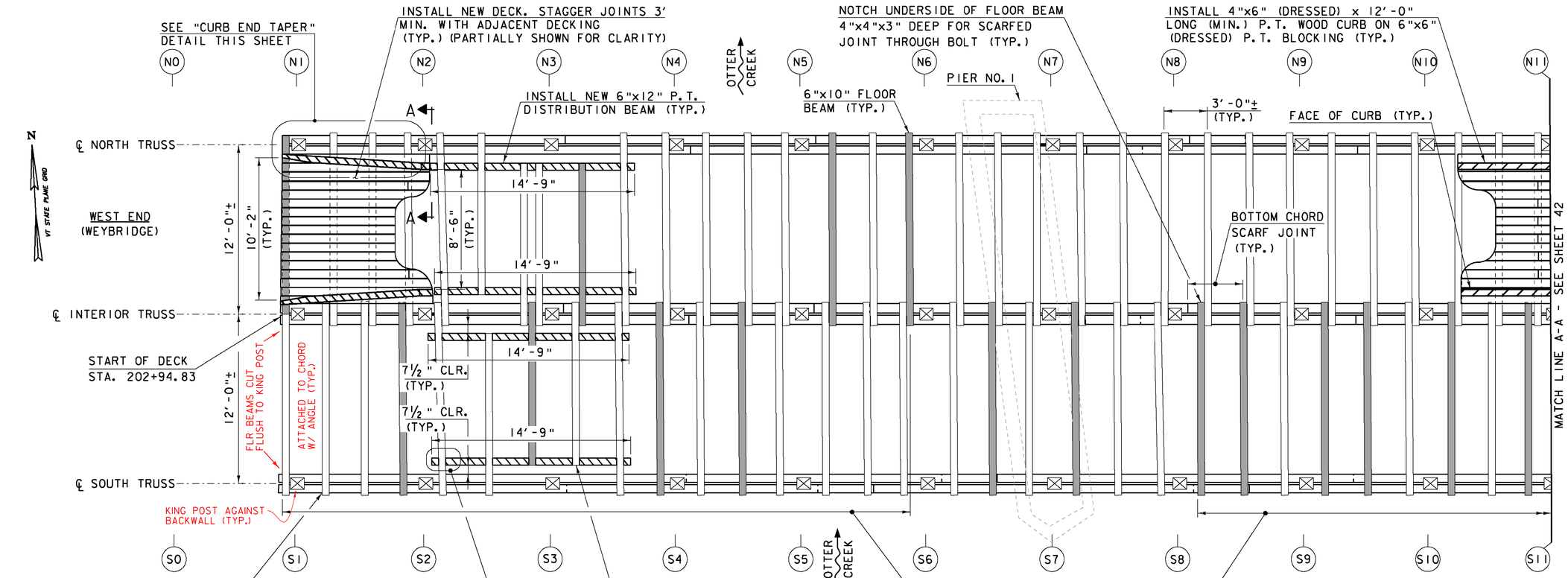

FLOOR FRAMING PLAN

SCALE: ¼" = 1'-0"

SHEET NOTE:

1. REMOVE THE EXISTING STRINGERS AND DECKING IN THEIR ENTIRETY AND CONSTRUCT NEW DECK AS DETAILED ON THIS SHEET.

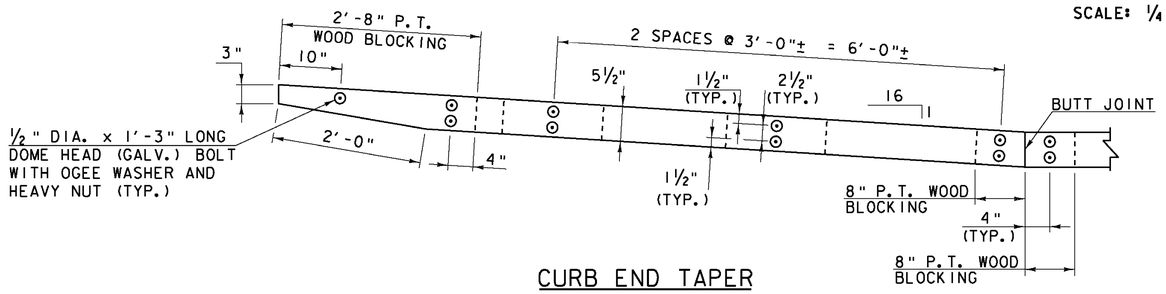

CURB END TAPER

SCALE: 1" = 1'-0"

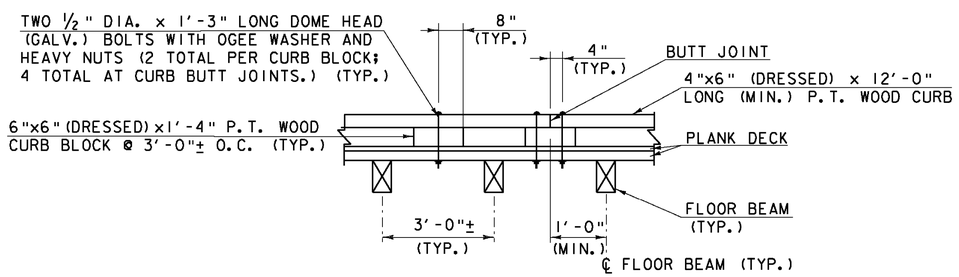

CURB ATTACHMENT DETAIL

SCALE: ½" = 1'-0"

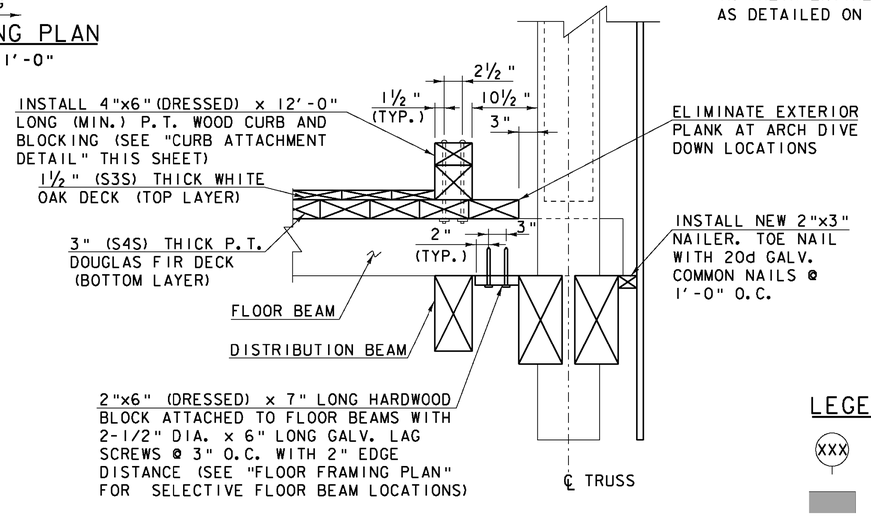

SECTION A-A

SCALE: 1" = 1'-0"

LEGEND:

- (XXX) TRUSS NODE LOCATION
- PREDETERMINED MEMBER TO BE REPLACED
- NEW MEMBER

SCALE: ¼" = 1'-0" (1 0 2 4 6)

SCALE: ½" = 1'-0" (1 0 1 2)

SCALE: 1" = 1'-0" (1 9 6 3 0 1 2)

Hoyle, Tanner & Associates, Inc.

HTA PROJECT NO.	MODEL
904217	framing1

PROJECT NAME: MIDDLEBURY-WEYBRIDGE

PROJECT NUMBER: BHO 1445(33)

FILE NAME: z06j086sup4.dgn
PROJECT LEADER: M.D.SARGENT
DESIGNED BY: J.BICJA
FLOOR FRAMING PLAN & DETAILS (1 OF 2)

PLOT DATE: 9/20/2011
DRAWN BY: J.B.McQUAID
CHECKED BY: S.T.JAMES
SHEET 41 OF 66