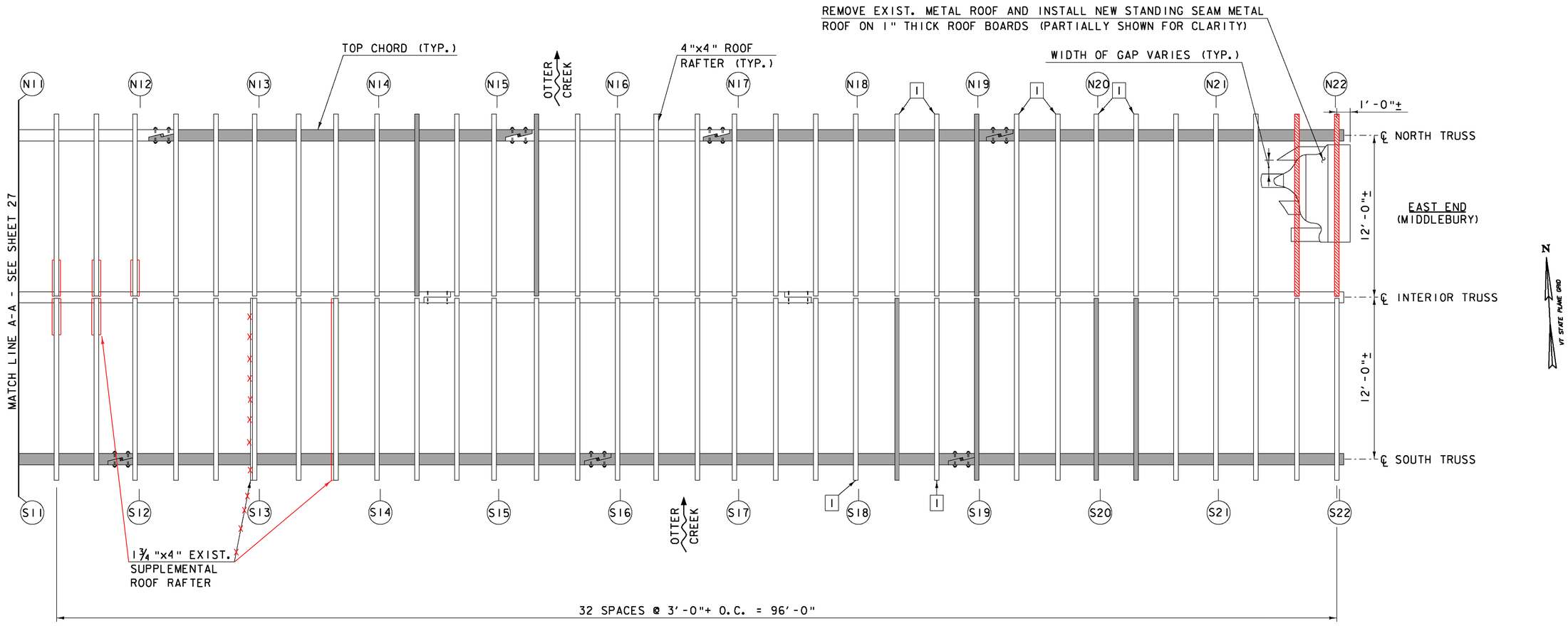

ROOF FRAMING PLAN

SCALE: ¼" = 1'-0"

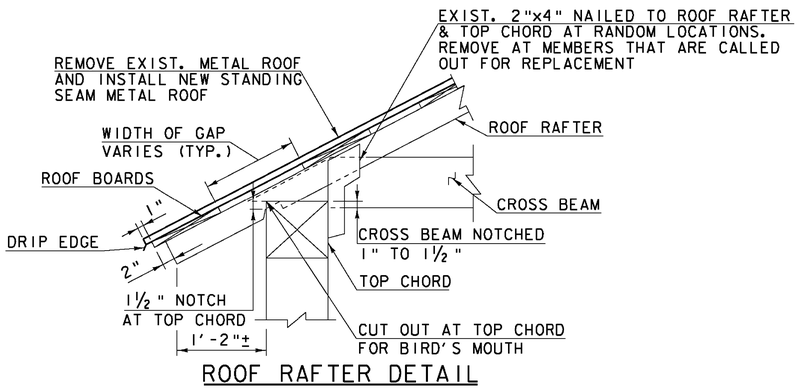

ROOF RAFTER DETAIL

SCALE: 1" = 1'-0"

REVISED TO DETAIL ON PAGE 27A

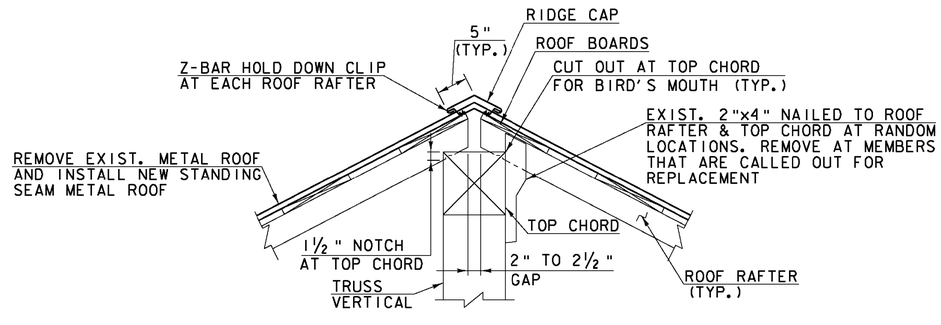

ROOF RIDGE CAP DETAIL

SCALE: 1" = 1'-0"

LEGEND:

(XXX) TRUSS NODE LOCATION

PREDETERMINED MEMBER TO BE REPLACED

[1] REMOVE 2"x4" TIMBER BELOW ROOF RAFTER AT TOP CHORD BEARING. RECUT RAFTER AS REQUIRED TO MATCH TYPICAL EXISTING BEARING.

SCALE: ¼" = 1'-0"
1 0 2 4 6

SCALE: 1" = 1'-0"
1 9 6 3 0 1 2

Hoyle, Tanner & Associates, Inc.

HTA PROJECT NO.	MODEL
904217	RoofFrame2

PROJECT NAME: MIDDLEBURY-WEYBRIDGE
PROJECT NUMBER: BHO 1445(33)

FILE NAME: z06j086supl.dgn
PROJECT LEADER: M.D.SARGENT
DESIGNED BY: J.BICJA
ROOF FRAMING PLAN & DETAILS (2 OF 2)

PLOT DATE: 9/20/2011
DRAWN BY: J.B.McQUAID
CHECKED BY: S.T.JAMES
SHEET 28 OF 66