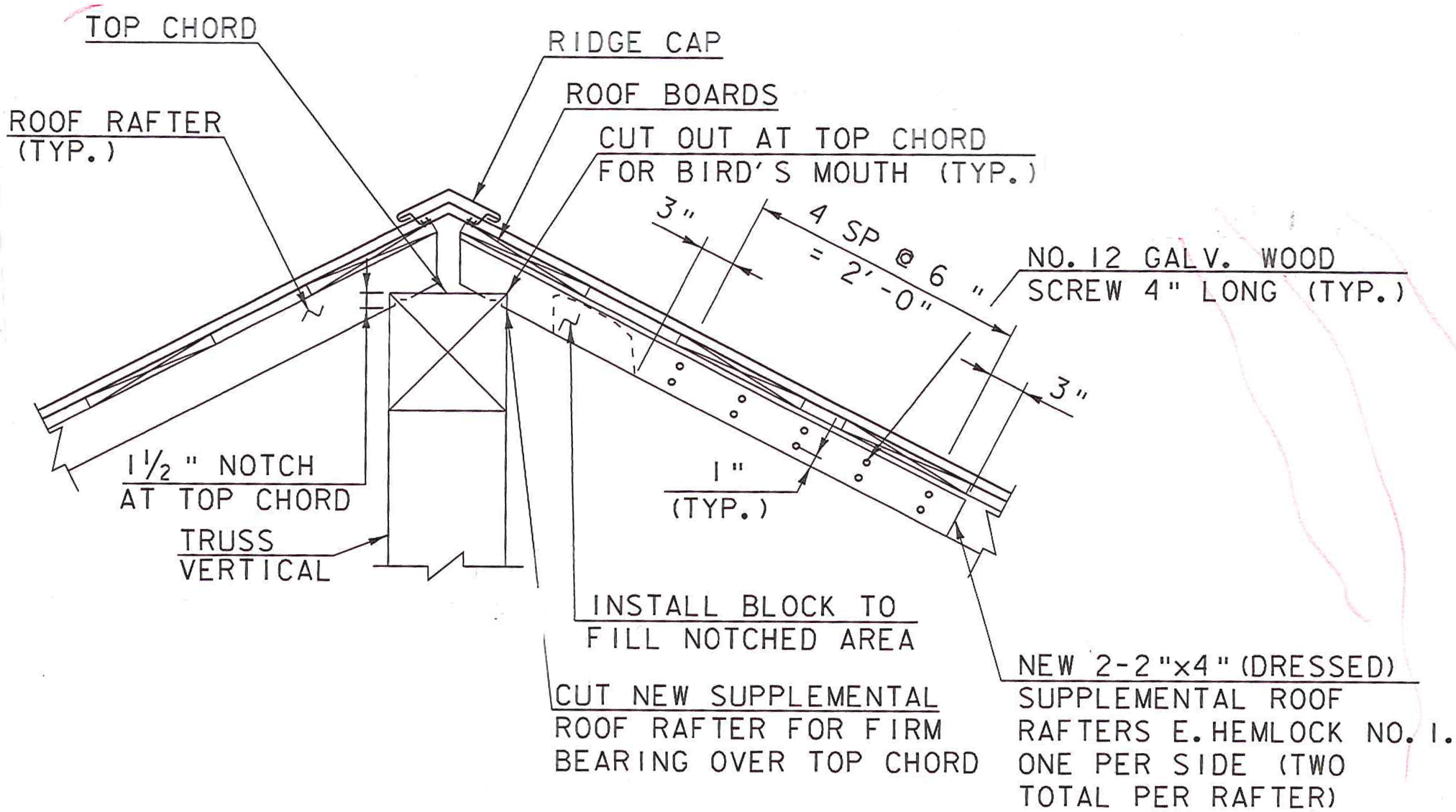

SUPPLEMENTAL ROOF RAFTER DETAIL

SCALE: 1" = 1'-0"