[ ] Approved	[ ] Revise and Resubmit
[X] Approved as Noted (Resubmit if Revised)	[ ] Rejected (See Comments Below)

Hoyle, Tanner & Associates, Inc.

Project No: 2014235

Approval is only for general conformance with the design concept to the Project and the information given in the Contract Documents. Contractor is responsible for dimensions to be confirmed and correlated at the job site; information that pertains solely to the fabrication process or to the means and methods of construction; coordination of the work of all trades; and performing all work in a safe and satisfactory manner. This approval does not modify Contractor's duty of comply with Contract.

Reviewed by: AAS Date: 12/2/13

Approved By: JMO Date: 12/2/13

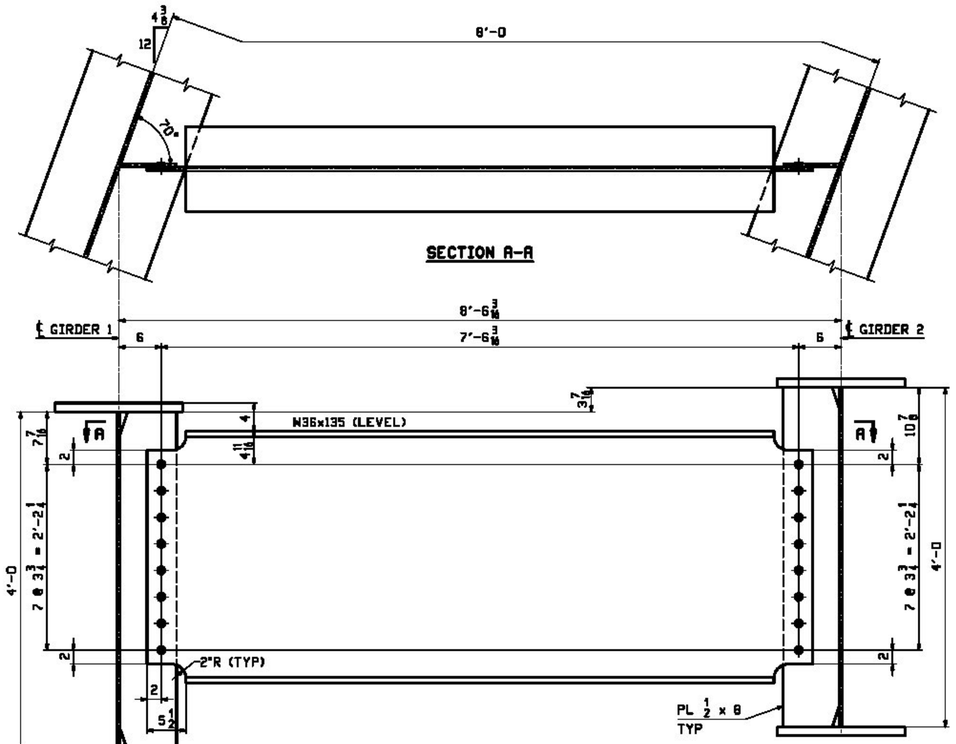

INT. DIAPHARGMS - TYPE D1

(DEVELOPED)
FRAMES NS OR FS OF STIFFENERS - SEE WS1

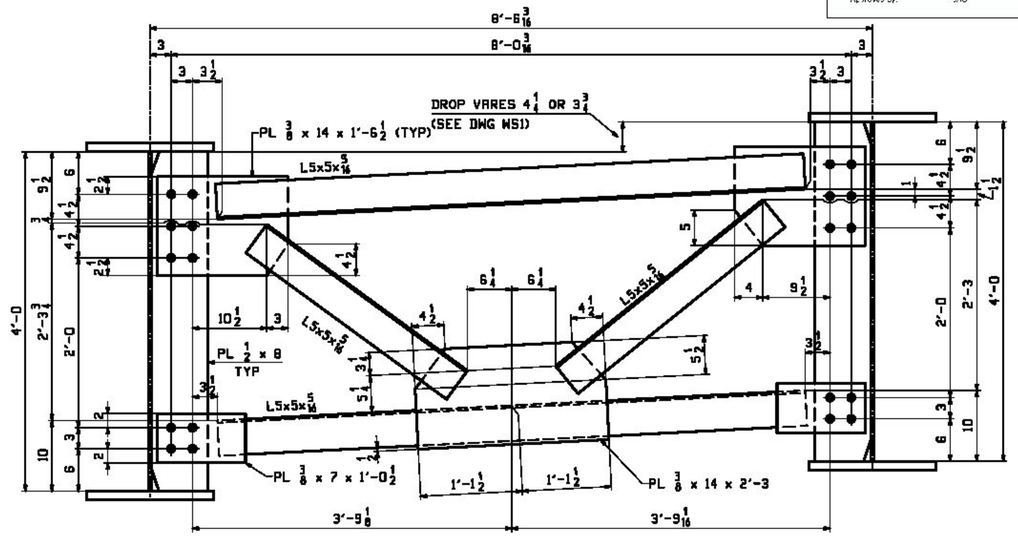

INT. DIAPHARGMS - TYPE D2

(DEVELOPED)
FRAMES NS OR FS OF STIFFENERS - SEE WS1

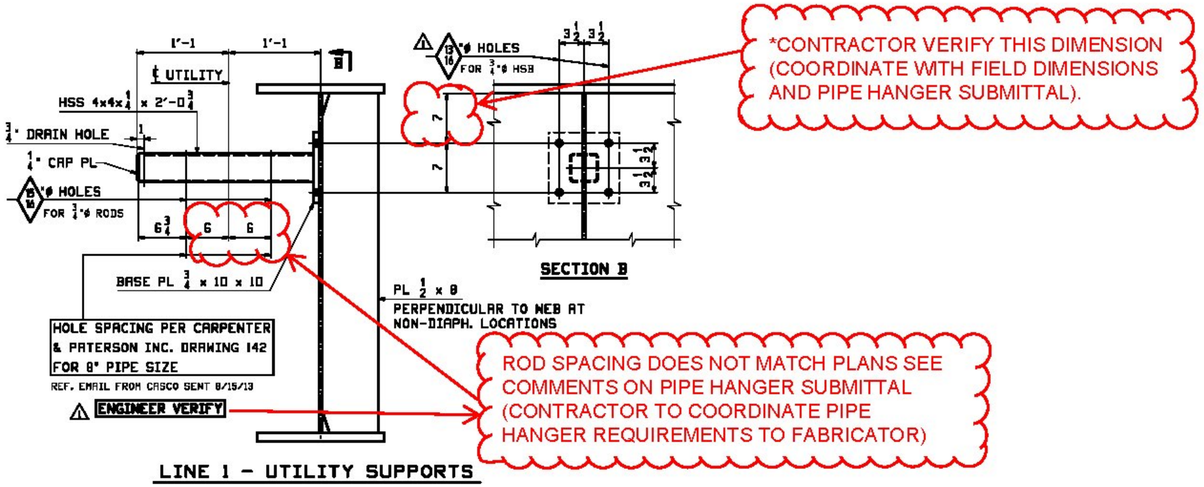

LINE 1 - UTILITY SUPPORTS

NOTES:

1. MATERIAL IS M270-50W (UN).
2. ALL HOLES SHALL BE 15/16ø (UN).
3. BOLTS SHALL BE 7/8ø (UN) A325 TYPE 3 IN UNPAINTED AREAS.
4. △1 BOLTS SHALL BE 7/8ø (UN) A325-1 GALV. IN PAINTED AREAS (SEE GN1.)
5. BOLTS AT UTILITY CONNECTIONS ARE 3/4"ø.

** NOTE **
THE PURPOSE OF THIS DRAWING IS TO COORDINATE GEOMETRIC CONTROL INFORMATION AND CONNECTION SPACING. THIS DWG IS SUBMITTED FOR INFORMATION ONLY & IS NOT INTENDED FOR SHOP FABRICATION. DETAIL DWGS WILL SHOW ALL WELDING AND DIMENSIONS REQ'D FOR FABRICATION.

REV.	DATE	REMARKS	DWN	CHK	APVL	SHOP
△1	10/17	APPROVAL COMMENTS	JTB	DBH		
0						

MATERIAL:	SURFACE PREP. & PAINT:	HOLES:	SHOP BOLTS:
M270-50W	SEE DWG GN1	15/16"ø (UN)	NONE

DESCRIPTION: TYPICAL LAYOUTS

CASCO BAY STEEL STRUCTURES, INC.
1 WALLACE AVE. PHONE (207) 780-6722
SOUTH PORTLAND, ME 04106 FAX. (207) 780-6726

STRUCTURE:	BRISTOL - BRIDGE NO. 31 VT ROUTE NO. TH 5 (SOUTH STREET) OVER NEW HAVEN RIVER	DRAWN: JTB	DATE: 08/09
		CHKD: DBH	DATE: 09/07
LOCATION:	TOWN OF BRISTOL, VT (ADDISON COUNTY)	JOB NO.	DWG NO.
PROJ NO.	BRO 1445 (32)	534	TD1
CUSTOMER:	BLOW AND COTE		REV. △1