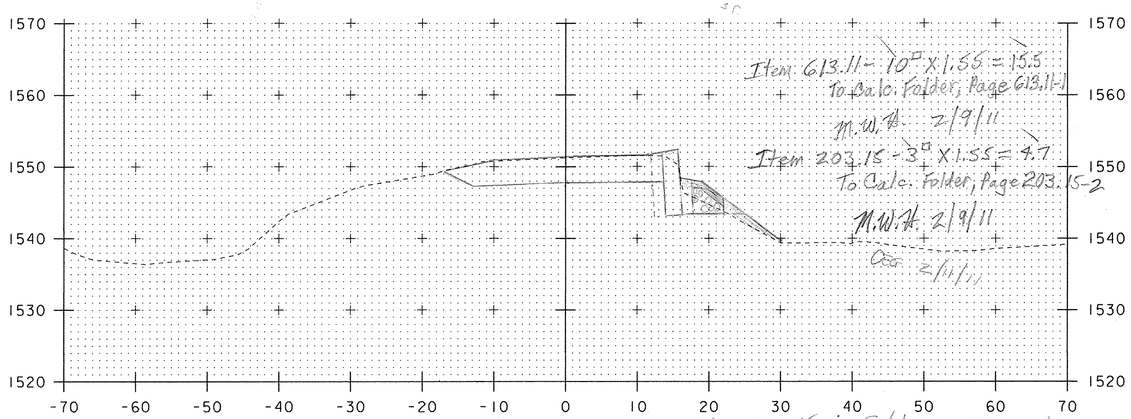

10+94 END FULL WIDTH OB

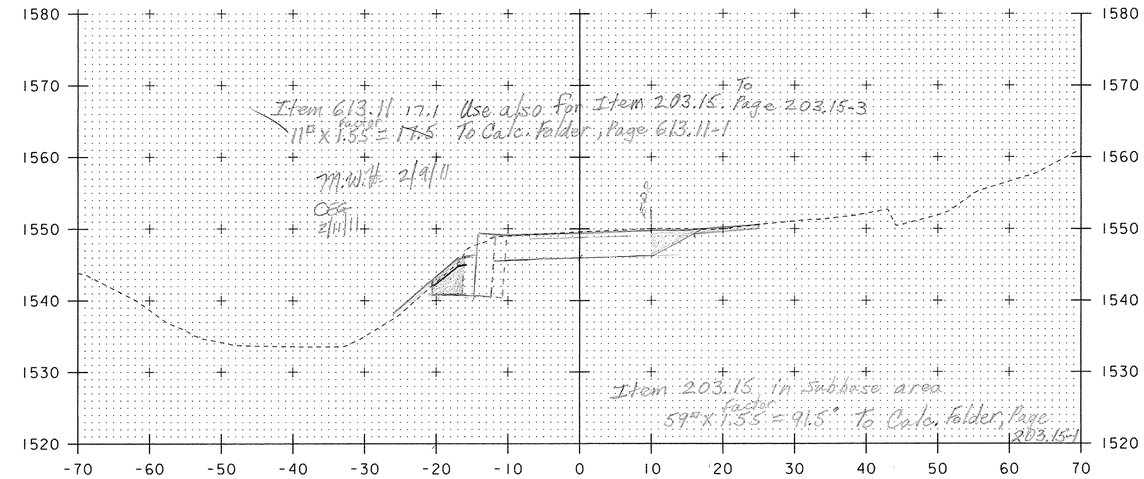

11+8 D.5 FULL WIDTH OB

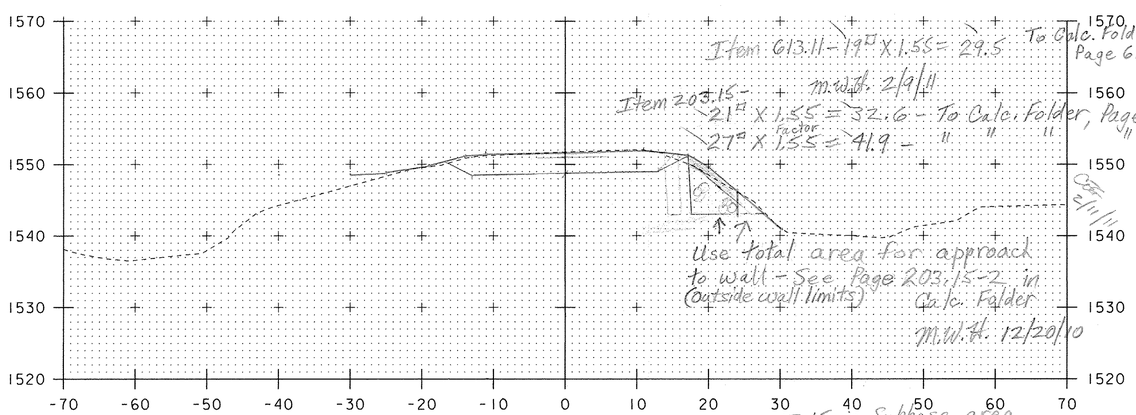

10+81

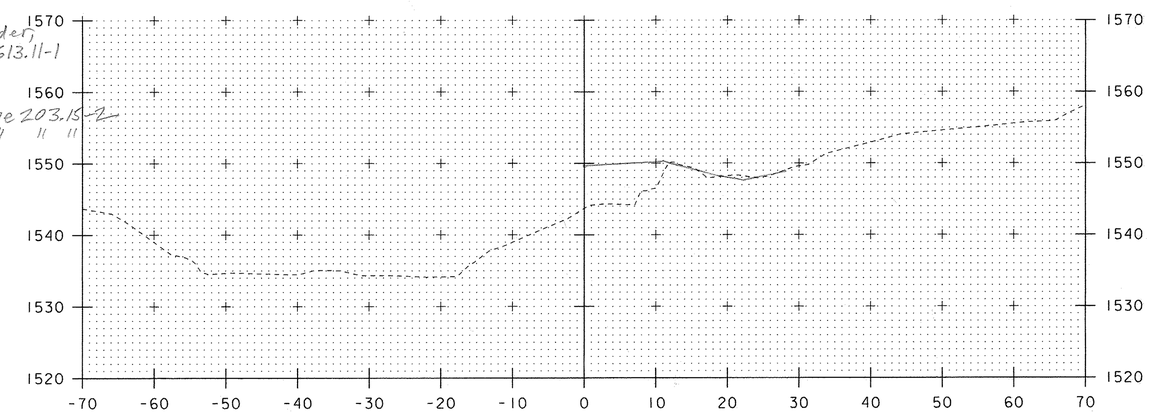

11+61

SCALE 1" = 10'-0"
10 0 10

PROJECT NAME: WARDSBORO	
PROJECT NUMBER: BHF 0114(5)	
FILE NAME: ppms*/Section/------.dgn	PLOT DATE: 12-OCT-2010
PROJECT LEADER: C.P.WILLIAMS	DRAWN BY: D.D.BEARD
DESIGNED BY: E.R.CHARBONNEAU	CHECKED BY: ------
------ ------	SHEET 29A OF 1