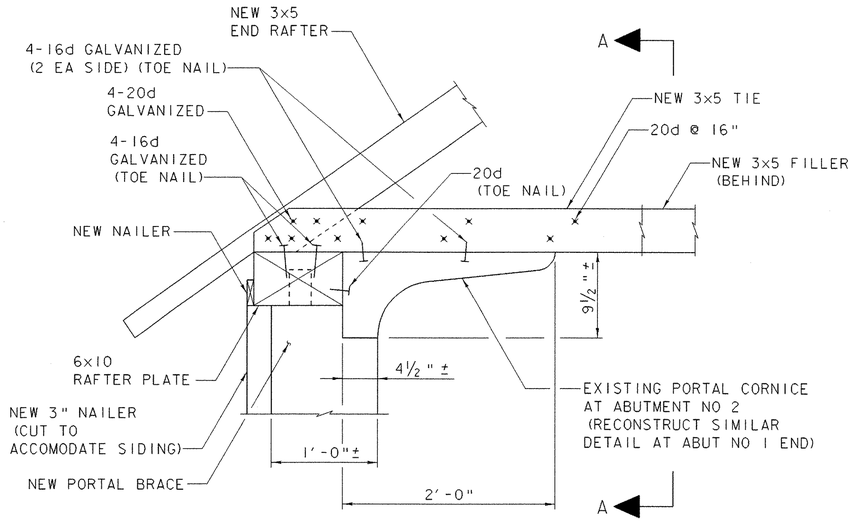


INSIDE END VIEW

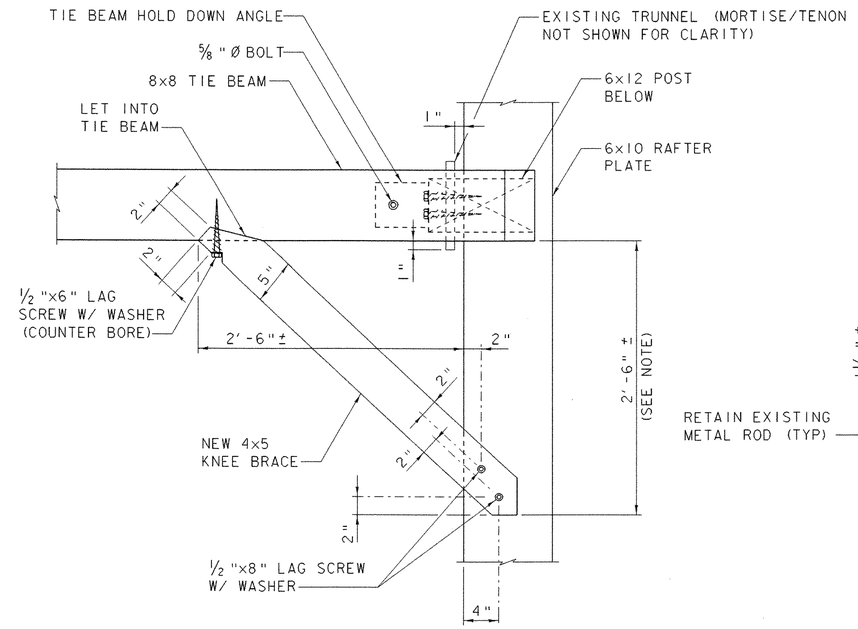


PLAN

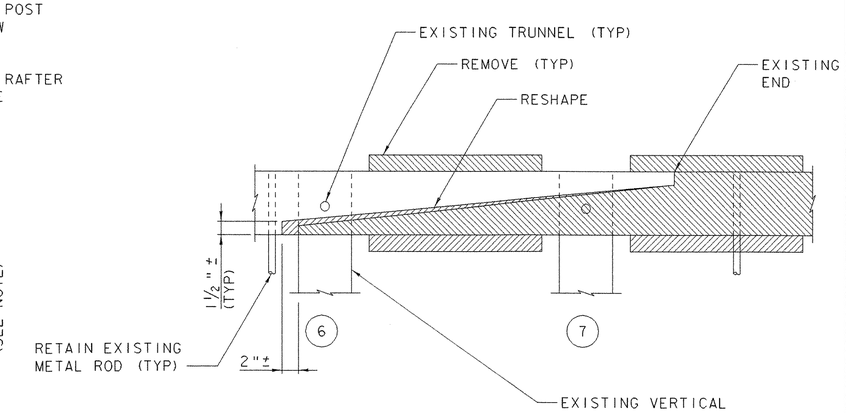


TIMBER REMOVAL ELEVATION

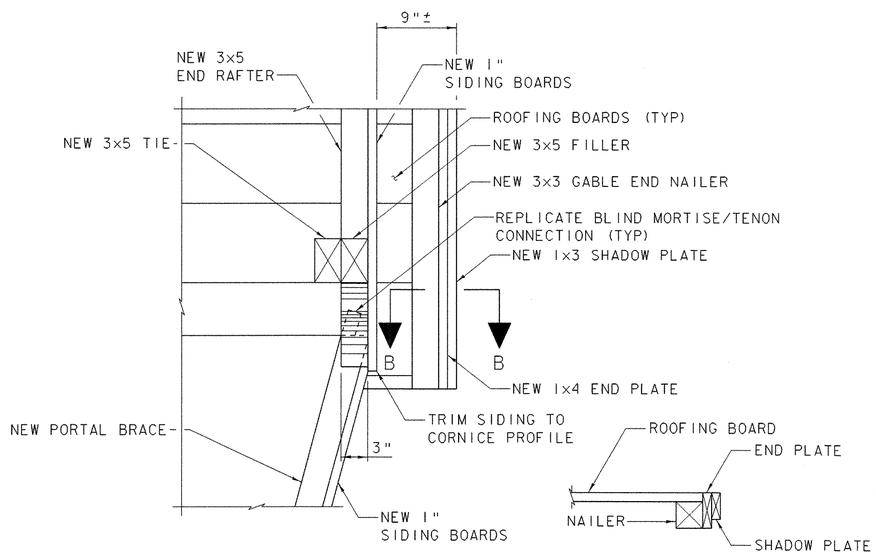


SECTION A-A

SECTION B-B

UPPER END PORTAL DETAILS

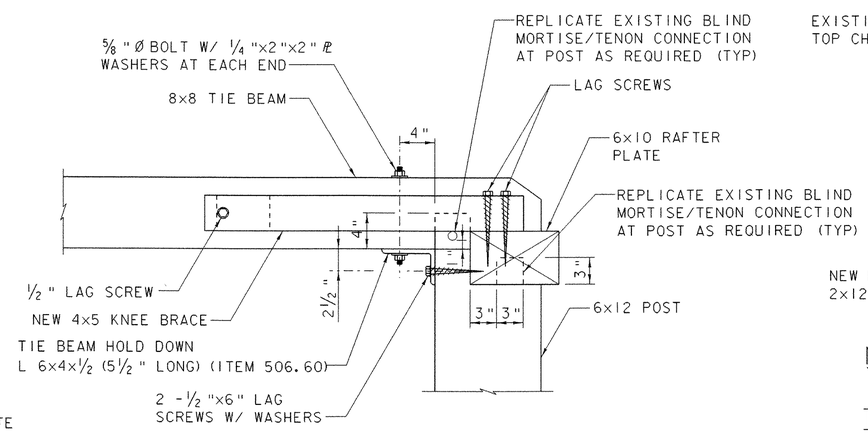


ELEVATION

NOTE: ADJUST KNEE BRACE LOCATION SLIGHTLY TO AVOID RAFTERS AND/OR ADJUST RAFTER POSITION SLIGHTLY AS DIRECTED BY THE ENGINEER.

UPPER LATERAL KNEE BRACE DETAIL

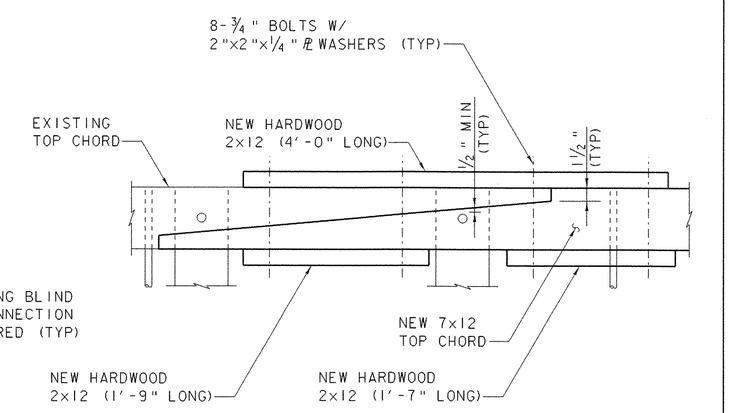


NEW SPLICE AND TIMBER ELEVATION

TOP CHORD SPLICE MODIFICATIONS
FOR DOWNSTREAM TRUSS

SCALE 1 1/2" = 1'-0"
1 9 6 3 0 1

VHB Vanasse Hangen Brustlin, Inc.

| | |
|---|---|
| PROJECT NAME: RANDOLPH | |
| PROJECT NUMBER: BHO 1444 (44) | |
| FILE NAME: z04ji46det2.dgn | PLOT DATE: 26-JUN-2007 |
| PROJECT LEADER: S. HODGDON | DRAWN BY: K. WENTWORTH |
| DESIGNED BY: S. HODGDON | CHECKED BY: K. ZIENKIEWICZ |
| BRIDGE DETAILS SHEET (2 OF 3) | SHEET 31 OF 39 |