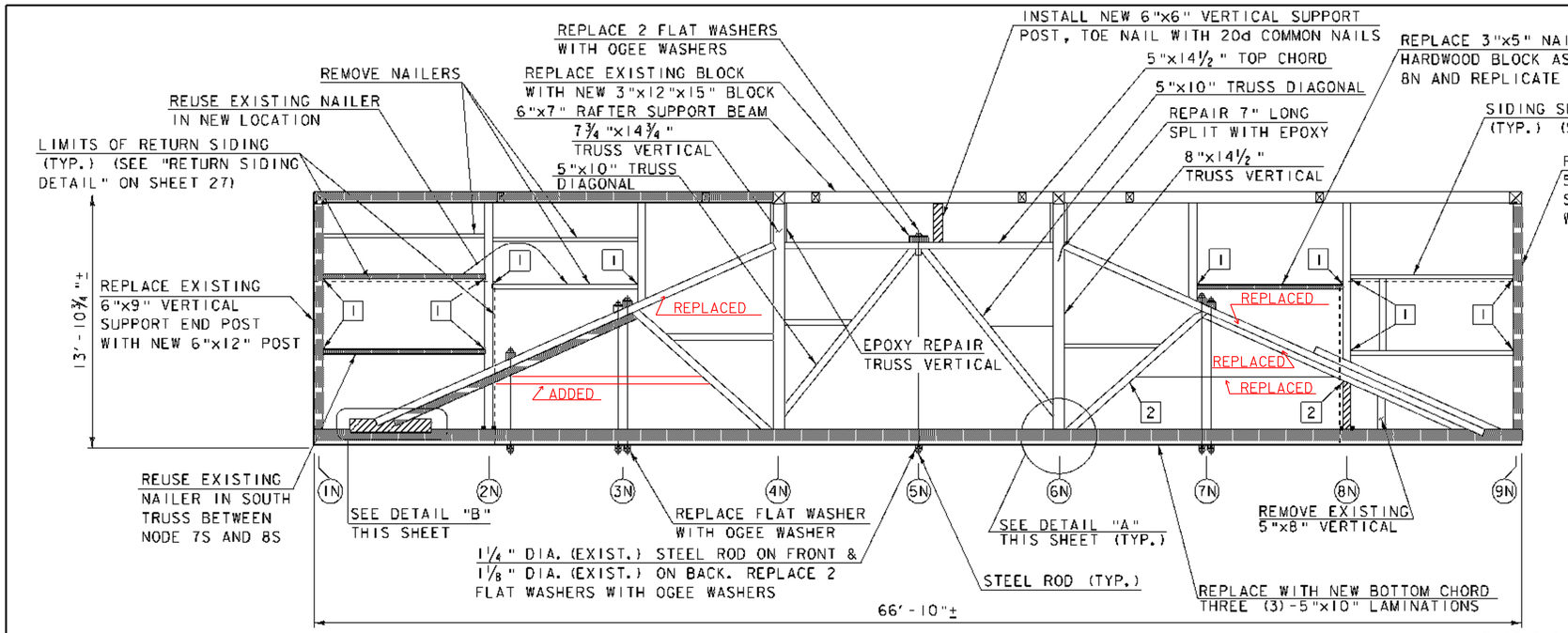

NORTH TRUSS ELEVATION
(LOOKING NORTH)
SCALE: ¼" = 1'-0"

TYPICAL TRUSS SECTION
SCALE: ¼" = 1'-0"

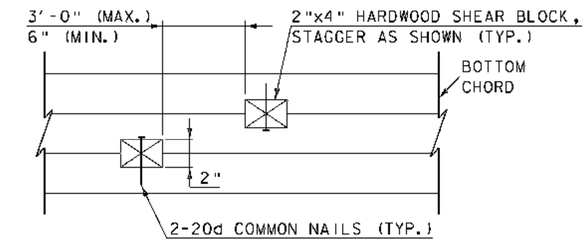

SHEAR BLOCK DETAIL
NOT TO SCALE

PLAN NOTES:

1. DIMENSIONS SHOWN ARE FOR BIDDING PURPOSE ONLY. ALL DIMENSIONS AND MEMBER SIZES SHOULD BE VERIFIED.
2. TRUSS NODES ARE LOCATED AT THE CENTERLINE OF TRUSS VERTICAL MEMBERS.
3. SIDING SUPPORT MEMBERS TO BE REALIGNED HORIZONTAL BEFORE INSTALLING NEW SIDING.
4. A TOTAL OF EIGHT (8) GALVANIZED PLATES SHALL BE INSTALLED AS SHOWN ON DETAIL "A", ON BOTH TRUSSES. THE CONTRACTOR SHALL REMOVE THE BRIDGE SIDING AND JACK THE BRIDGE TO THE PROPOSED CAMBER PRIOR TO RELEASE. EACH PLATE IS UNIQUE, THEREFORE A TEMPLATE SHALL BE MADE FOR EACH AND THE FINISHED PLATE INSTALLED. THE PLATE SHALL BE FABRICATED AND ALL HOLES DRILLED PRIOR TO GALVANIZING.
5. A TOTAL OF FOUR (4) GALVANIZED PLATES (2 PER TRUSS) SHALL BE INSTALLED AS SHOWN IN "RAFTER SUPPORT BEAM TO TRUSS VERTICAL CONNECTION DETAIL" ON SHEET 27.
6. REMOVE STEEL STRAPS & BOLTS AND PLUG END OF BOLT HOLES WITH WOOD DOWELS & EPOXY (NODES 4N, 4S, 6N AND 6S) (PAID UNDER ITEM 900.620, SPECIAL PROVISION (WOOD EPOXY REPAIRS)).
7. SEE SHEET 27 FOR TRUSS DETAILS.
8. ALL WEDGE BLOCKS, 3"x4"x15" AND 3"x12"x15" LONG BLOCKS AT STEEL VERTICAL RODS SHALL BE PRESSURE TREATED DOUGLAS FIR NO. 1 OR BETTER.

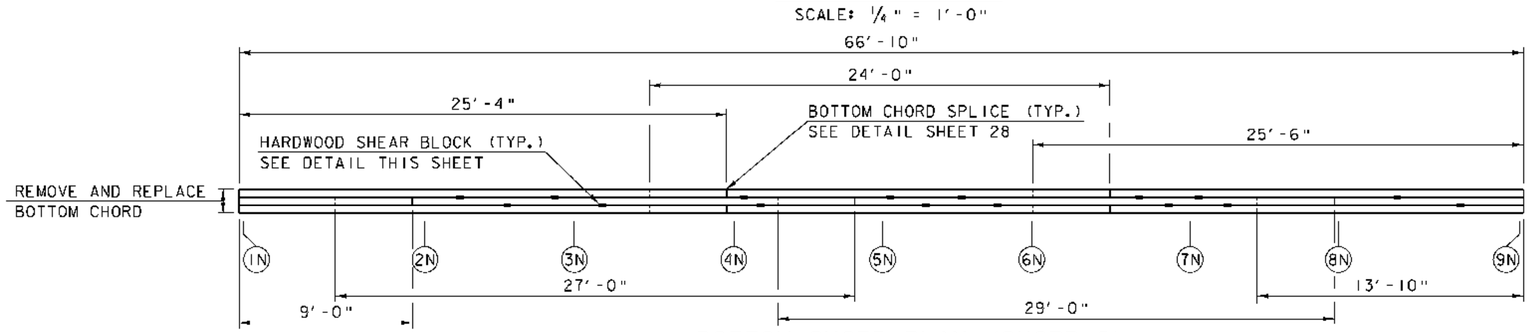

BOTTOM CHORD PLAN (CHORD 2)
NOTE: BOTTOM CHORD NOT SHOWN AS SHADED FOR CLARITY.
SCALE: ¼" = 1'-0"

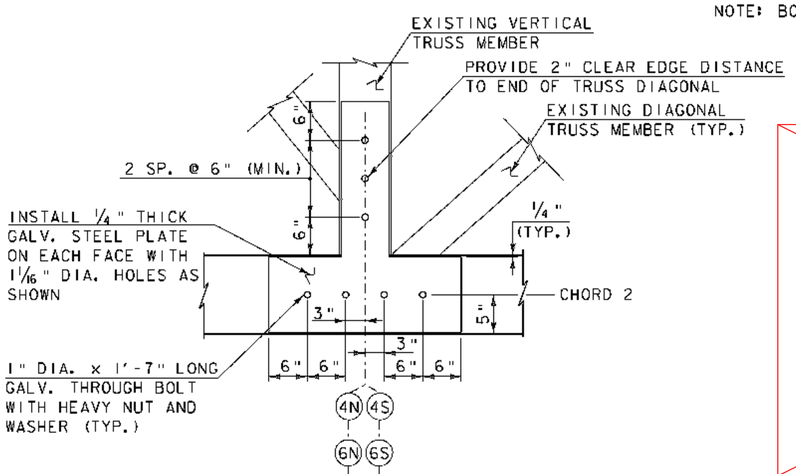

DETAIL "A"
SCALE: 1" = 1'-0"

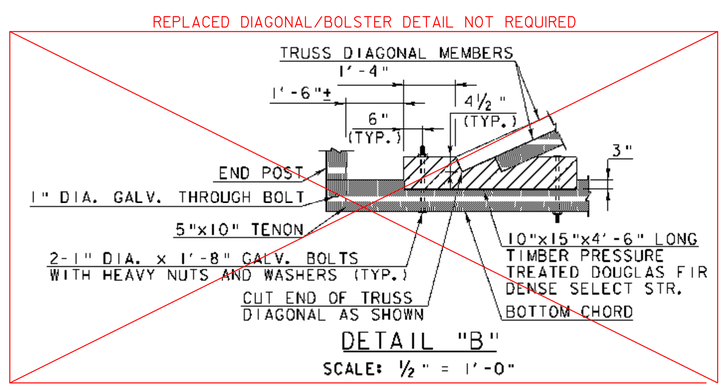

DETAIL "B"
SCALE: ½" = 1'-0"

LEGEND:

- (1N) TRUSS NODE
- TRUSS MEMBER TO BE REPLACED
- NEW MEMBER
- [1] RECONNECT JOINT WITH ONE ⅝" DIA. x 5" LONG GALV. LAG SCREW THROUGH TENON ON OUTSIDE FACE. COUNTER SINK HEAD
- [2] TOE NAIL WITH 2-20d COMMON NAILS

SCALE: ¼" = 1'-0"
1 0 2 4 6

SCALE: ½" = 1'-0"
1 0 1 2 3

SCALE: 1" = 1'-0"
1 9 6 3 0 1 2

MODEL	Default
HTA PROJECT NO.	904213

Hoyle, Tanner & Associates, Inc.

PROJECT NAME:	FAIRFIELD
PROJECT NUMBER:	BHO 1448(32)
FILE NAME: Z04J144sup3.dgn	PLOT DATE: 4/25/2008
PROJECT LEADER: J.H.WEAVER	DRAWN BY: J.B.McQUAID
DESIGNED BY: J.BICJA	CHECKED BY: S.T.JAMES
NORTH TRUSS ELEV. AND CHORD PLAN	SHEET 26 OF 36