Metric

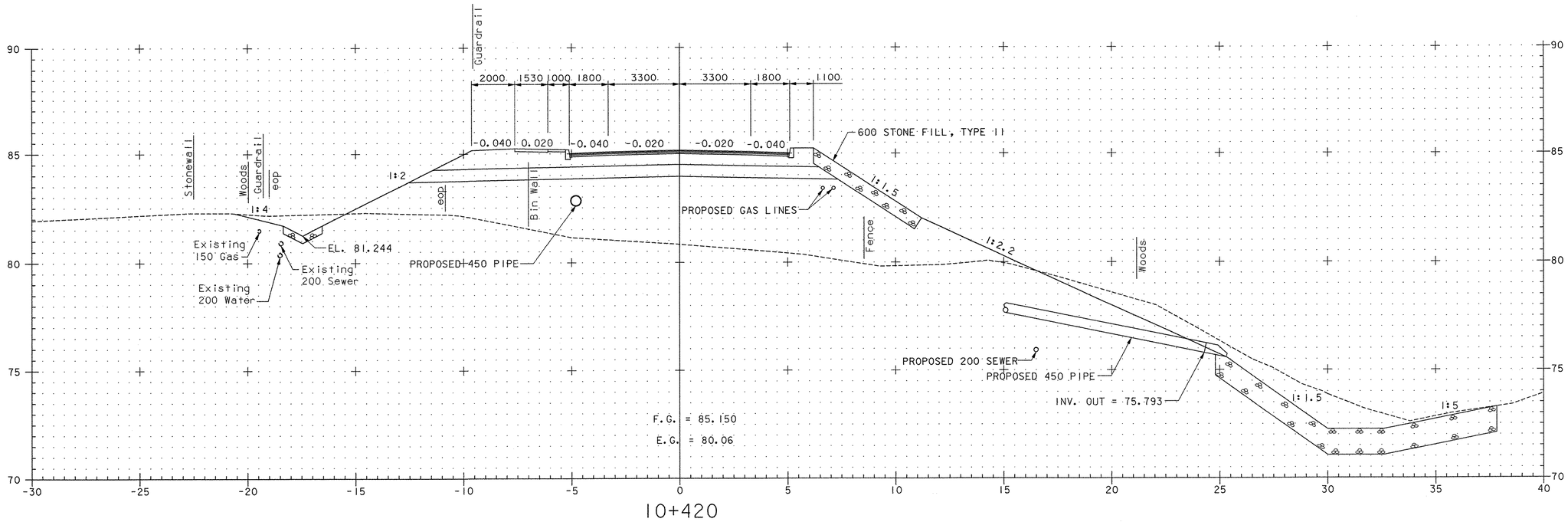

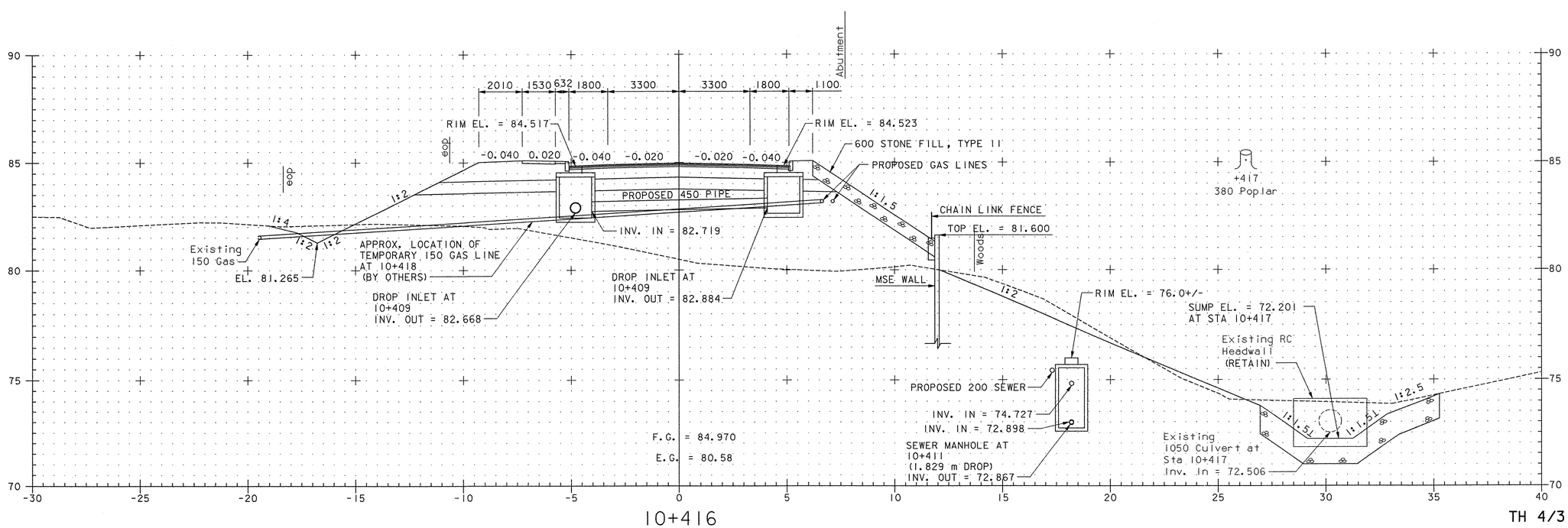

TH 4/3

0 2 4 6 8 10
SCALE 1:100

VHB Vanasse Hangen Brustlin, Inc.

FROM STA 10+416	TO STA 10+420
PROJECT NAME	COLCHESTER - SOUTH BURLINGTON
PROJECT NO.	BRM 5600(6)S C/2
SURVEYED BY	EIV TECH. SERV. 6/97, 11/02; VTRANS 2/02, 11/02
SHEET 108 OF 124	

VHB NO. 50735

plot date: 4/25/2005