Metric

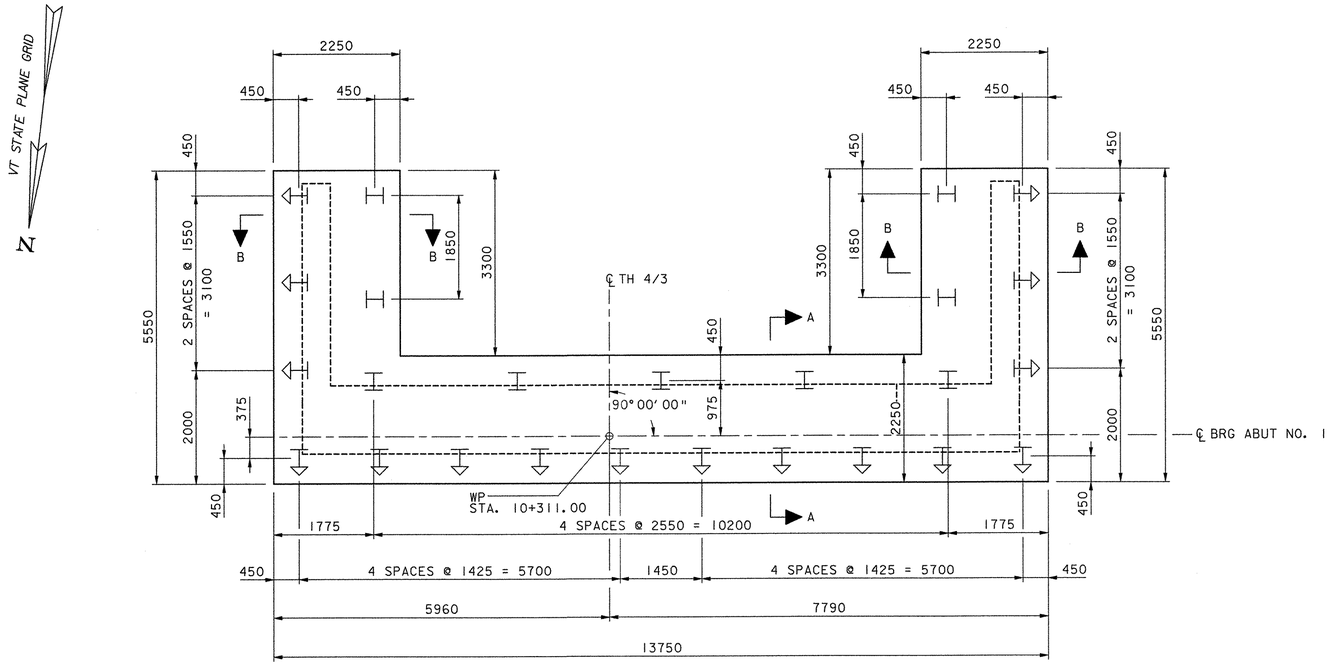

MASONRY
SCALE: 1:50

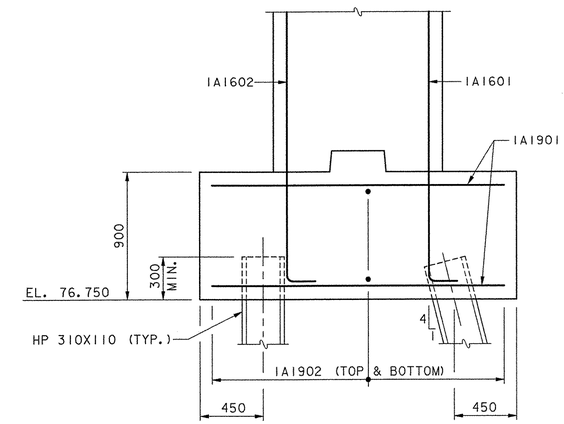

SECTION A-A
SCALE: 1:20

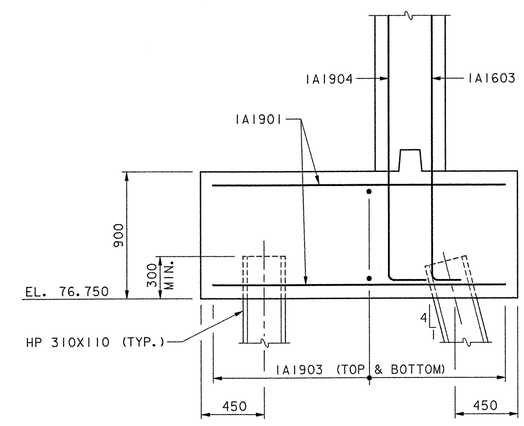

SECTION B-B
SCALE: 1:20

0 500 1000 1500
SCALE IN MILLIMETERS

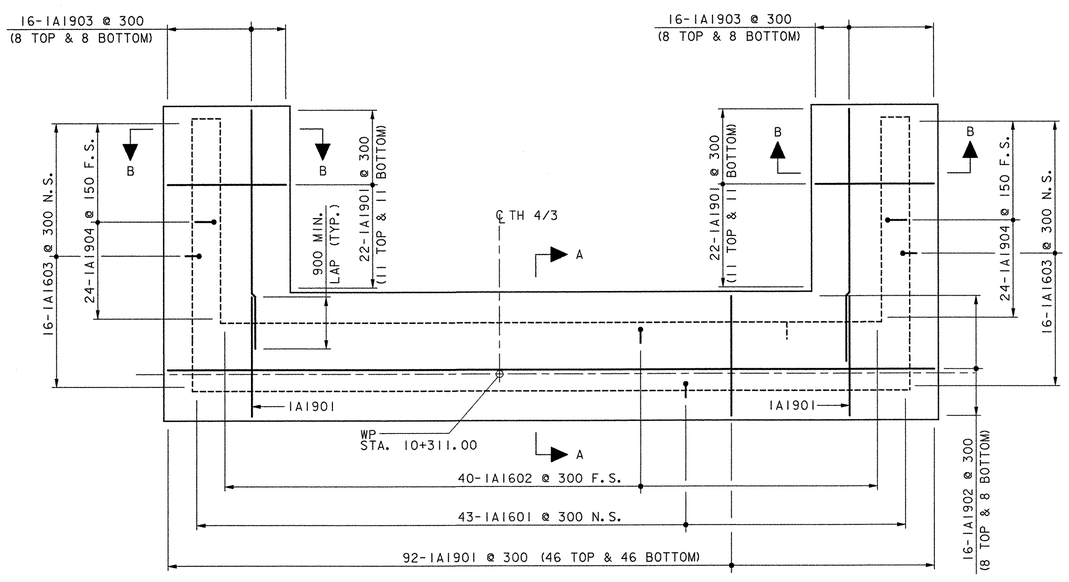

REINFORCING
SCALE: 1:50

0 1250 2500 3750
SCALE IN MILLIMETERS

PILE KEY

= VERTICAL PILE

= PILE BATTERED 1 HORIZ. TO 4 VERT.

REINFORCING KEY

E.F. = EACH FACE
N.S. = NEAR SIDE
F.S. = FAR SIDE

DATUM
VERTICAL NAVD 88
HORIZONTAL NAD 83 (92)

VHB Vanasse Hangen Brustlin, Inc.

STATE OF VERMONT
AGENCY OF TRANSPORTATION

Town Of COLCHESTER-SOUTH BURLINGTON	Bridge No. 6
Highway No. TH 4/3	Log Sta. / Surv. Sta.
TH 4/3 OVER WINOOSKI RIVER & N.E.C.R.	
ABUTMENT NO.1 FOOTING	
Designed By J.T. KLEIN	Drawn By K.D. WENTWORTH
Checked By K.G. KRETSCH Date 4/05	Bridge Design Supervisor S.M. GUNN Date 4/05
PROJECT COLCHESTER-SOUTH BURLINGTON	PROJECT NO. BRM 5600(6)S C/2
I.G.C. Info.	
Bridge Sheet No. ZD139AF1	Sheet 65 of 124

VHB NO. 50735 plot date: 4/25/2005