STATE OF VERMONT
AGENCY OF TRANSPORTATION

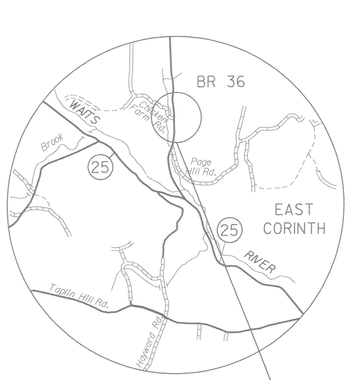

LOCATION MAP
NOT TO SCALE

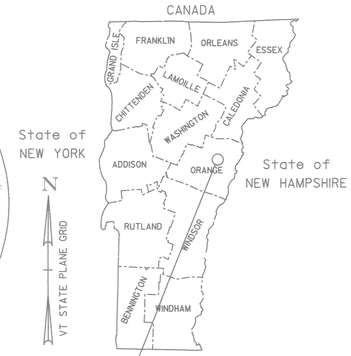

PROJECT LOCATION
CORINTH BRO 1447(29)

PROPOSED IMPROVEMENT
BRIDGE PROJECT
TOWN OF CORINTH
COUNTY OF ORANGE
CHICKEN FARM ROAD (T.H.16) CLASS 3 LOCAL ROAD
BRIDGE NO. 36

PROJECT LOCATION: BEGINNING AT A POINT ON (T.H. 16) CHICKEN FARM ROAD APPROXIMATELY 0.065 MILES WEST OF THE INTERSECTION OF (T.H. 16) CHICKEN FARM ROAD AND (T.H. #1) VILLAGE ROAD AND EXTENDING EASTERLY ALONG (T.H. 16) CHICKEN FARM ROAD FOR 0.065 MILES.

PROJECT DESCRIPTION: REPLACEMENT OF EXISTING BRIDGE WITH A PRECAST CONCRETE NEXT BEAM SUPERSTRUCTURE AND CONCRETE SUBSTRUCTURE, WITH ROADWAY APPROACH WIDENING WORK.

LENGTH OF BRIDGE: 65.20 FEET = 0.012 MILES
LENGTH OF ROADWAY: 277.74 FEET = 0.053 MILES
LENGTH OF PROJECT: 342.94 FEET = 0.065 MILES

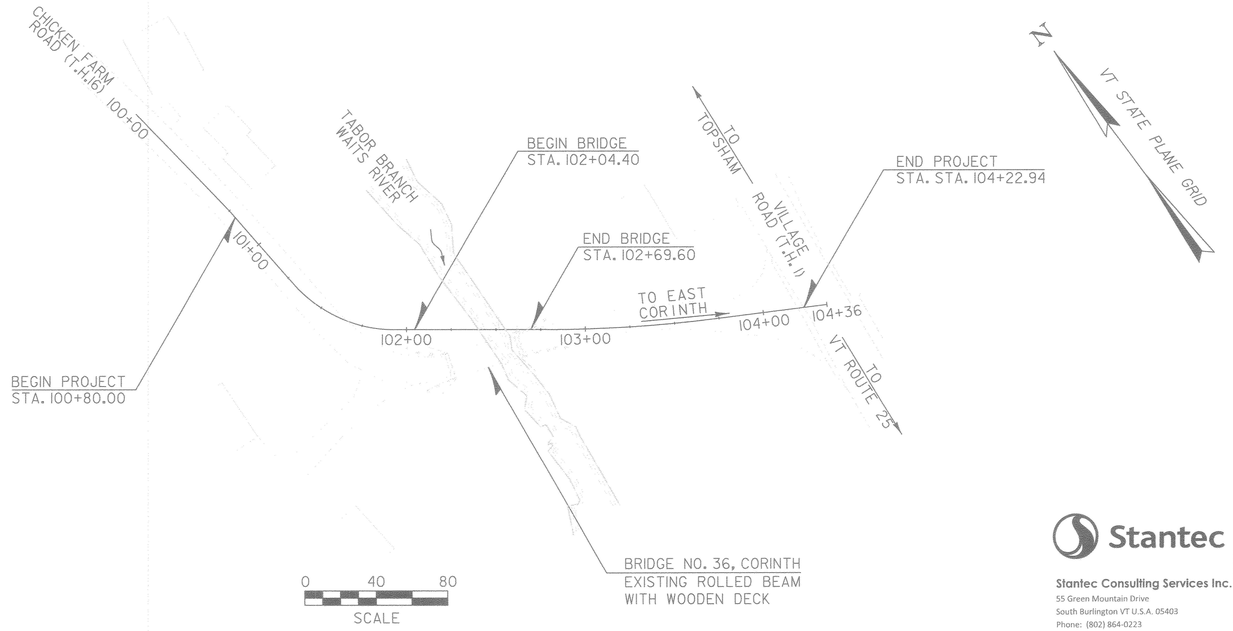

RECORD PLANS

CONTRACTOR: AUSTIN CONSTRUCTION, INC. - CONCORD, VT

RESIDENT ENGINEER: PETE HODGSON

CONSTRUCTION BEGAN: NOVEMBER 25, 2014

CONSTRUCTION COMPLETE: DECEMBER 09, 2015

RECORD PLANS BY: PETE HODGSON & JESSE IVES

I HEREBY CERTIFY THAT ALL THE CONSTRUCTION REQUIRED BY THIS SET OF DRAWINGS HAS BEEN ACCOMPLISHED AS INDICATED HEREIN.

BY _____ RESIDENT ENGINEER

DATE April 12, 2018

NOTE: Any further information concerning final quantities, amounts or other details relative to this project may be found at Central Files in the electronic archives.

CONSTRUCTION IS TO BE CARRIED ON IN ACCORDANCE WITH THESE PLANS AND THE STANDARD SPECIFICATIONS FOR CONSTRUCTION DATED 2011, AS APPROVED BY THE FEDERAL HIGHWAY ADMINISTRATION ON JULY 20, 2011 FOR USE ON THIS PROJECT, INCLUDING ALL SUBSEQUENT REVISIONS AND SUCH REVISED SPECIFICATIONS AND SPECIAL PROVISIONS AS ARE INCORPORATED IN THESE PLANS.

QUALITY ASSURANCE PROGRAM : LEVEL 2

SURVEYED BY : VSE
SURVEYED DATE : 11/05/2012

DATUM
VERTICAL NAVD 88
HORIZONTAL NAD 83 (2011)

Stantec
Stantec Consulting Services Inc.
55 Green Mountain Drive
South Burlington VT U.S.A. 05403
Phone: (802) 864-0223
Fax: (802) 864-0165
www.stantec.com

DIRECTOR OF PROJECT DELIVERY

APPROVED _____ DATE _____

PROJECT MANAGER : DANNY LANDRY

PROJECT NAME : CORINTH
PROJECT NUMBER : BRO 1447(29)

SHEET 1 OF 57 SHEETS

STATE OF VERMONT
AGENCY OF TRANSPORTATION

PRELIMINARY INFORMATION SHEET (BRIDGE)

Version 11.06.15

LRFD

INDEX OF SHEETS

PLAN SHEETS

1	TITLE SHEET
2	PRELIMINARY INFORMATION SHEET
3	TYPICAL SECTIONS - TYP 1
4	TYPICAL SECTIONS - TYP 2
5	PROJECT NOTES
6 - 8	QUANTITY SHEETS
9	CONVENTIONAL SYMBOLOGY LEGEND
10	TIE SHEET
11	PLAN LAYOUT SHEET - PL 1
12	DRAINAGE DETAIL SHEET - DDS 1
13	PROFILE SHEET - PRO 1
14	TRAFFIC CONTROL SHEET - TCS 1
15	DETOUR PROFILE SHEET - TPS 1
16	UTILITY LAYOUT SHEET - UTL 1
17	TRAFFIC SIGNS AND LINES LAYOUT - TSL 1
18	TRAFFIC SIGN SUMMARY SHEET - TSS1
19	BORING INFORMATION SHEET
20 - 22	BORING LOG 1-3
23	PLAN AND ELEVATION
24	FRAMING PLAN
25	NEXT BEAM DETAILS 1
26	NEXT BEAM DETAILS 2
27	CURTAIN WALL DETAILS 1
28	CURTAIN WALL DETAILS 2
29	BEARING DETAILS
30	ABUTMENT 1 MASONRY 1
31	ABUTMENT 1 MASONRY 2
32	ABUTMENT 1 FOOTING REINFORCEMENT 1
33	ABUTMENT 1 FOOTING REINFORCEMENT 2
34	ABUTMENT 1 & WW 1 REINFORCEMENT
35	ABUTMENT 2 MASONRY
36	ABUTMENT 2 FOOTING REINFORCEMENT
37	ABUTMENT 2 REINFORCEMENT
38	WINGWALL 2, 3 & 4 REINFORCEMENT
39	ABUTMENT & WINGWALL SECTIONS
40	BRIDGE RAIL DETAILS 1
41	APPROACH RAIL DETAILS
42	REINFORCING STEEL SCHEDULE
43 - 47	ROADWAY CROSS SECTIONS - RXS 1-5
48 - 50	CHANNEL CROSS SECTIONS - CXS 1-3
51	EPSC NARRATIVE SHEET - ECN 1
52	EPSC CONSTRUCTION SITE PLAN - ECP 1
53 - 55	EPSC DETAIL SHEET - ECD 1-3
56	R.O.W. DETAIL SHEET #1
57	ROW LAYOUT SHEET 1 OF 1

STANDARDS LIST

B-71	STANDARD FOR RESIDENTIAL AND COMMERCIAL DRIVES	07-08-2005
C-10	CURBING	02-11-2008
D-1	PRECAST REINFORCED CONCRETE DROP INLET DETAILS	06-01-1994
D-3	TREATED GUTTERS	06-01-1994
D-9	REINFORCED CONCRETE DROP INLET WITH VERTICAL CURB & THROAT ADAPTER	06-01-1994
D-11	STEEL OR IRON GRATES & COVERS (TYPE A)	08-08-1995
E-120	STANDARD SIGN PLACEMENT - EXPRESSWAY & FREEWAY	08-08-1995
E-121	STANDARD SIGN PLACEMENT - CONVENTIONAL ROAD	08-30-1996
E-140	REGULATORY SIGN DETAILS	08-09-1995
E-171A	TRAFFIC CONTROL SIGNALS GENERAL NOTES AND DETAILS	08-09-1995
E-172	VEHICLE DETECTOR LOOP DETAILS	08-18-1995
E-193	PAVEMENT MARKING DETAILS	06-01-1994
G-1B	BOX BEAM GUARD RAIL	08-07-1995
J-3	MAIL BOX SUPPORT DETAILS	08-22-2012
S-352A	BRIDGE RAILING, GALVANIZED STEEL TUBING/CONC. COMBINATION	08-22-2012
S-352B	BRIDGE RAILING, GALVANIZED STEEL TUBING/CONC. COMBINATION	08-22-2012
S-352C	BRIDGE RAILING, GALVANIZED STEEL TUBING/CONC. COMBINATION	08-06-2012
T-1	TRAFFIC CONTROL GENERAL NOTES	08-06-2012
T-10	CONVENTIONAL ROADS AND CONSTRUCTION APPROACH SIGNING	08-06-2012
T-28	CONSTRUCTION SIGN DETAILS	08-06-2012
T-30	CONSTRUCTION SIGN DETAILS	08-06-2012
T-35	CONSTRUCTION ZONE LONGITUDINAL DROP-OFFS	08-06-2012
T-36	CONSTRUCTION ZONE LONGITUDINAL DROP-OFFS FOR PAVING	08-06-2012
T-42	BRIDGE NUMBER PLAQUE	04-09-2014
T-45	SQUARE TUBE SIGN POST AND ANCHOR	01-02-2013

STRUCTURE DETAIL SHEETS

SD-501.00	CONCRETE DETAILS AND NOTES	02-09-2012
SD-502.00	CONCRETE DETAILS AND NOTES	10-10-2012
SD-516.10	BRIDGE JOINT ASPHALTIC PLUG	08-29-2011

TRAFFIC DATA

YEAR	ADT	DHV	% D	% T	ADTT
2014	60	20	55	9.2	5
2034	60	20	55	10.7	5

20 year ESAL for flexible pavement from 2014 to 2024 : 5.000

40 year ESAL for flexible pavement from 2014 to 2034 : 10.000

Design Speed : 15 mph

AS BUILT "REBAR" DETAIL

LEVEL I	LEVEL II	LEVEL III
TYPE:	TYPE:	TYPE:
GRADE:	GRADE:	GRADE:

TEMPORARY BRIDGE PROFILE ALONG TEMP CL

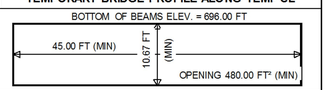

FINAL HYDRAULIC REPORT

HYDROLOGIC DATA

Date: February 2014

DRAINAGE AREA : 29.04 sq. mi.
CHARACTER OF TERRAIN : Hilly to mountainous
STREAM CHARACTERISTICS : Perennial, flashy, sinuous
NATURE OF STREAMBED : Gravel, cobbles, small boulders, ledge

PEAK FLOW DATA

Q 2.33 =	900 cfs	Q 50 =	2875 cfs
Q 10 =	1825 cfs	Q 100 =	3300 cfs
Q 25 =	2350 cfs	Q 500 =	4620 cfs

DATE OF FLOOD OF RECORD : November 1927
ESTIMATED DISCHARGE: unknown
WATER SURFACE ELEV.: unknown
NATURAL STREAM VELOCITY : @ Q25 = 8.3 cfs
ICE CONDITIONS : moderate
DEBRIS: moderate
DOES THE STREAM REACH MAXIMUM HIGHWATER ELEV. RAPIDLY? yes
IS ORDINARY RISE RAPID? yes
IS STAGE AFFECTED BY UPSTREAM OR DOWNSTREAM CONDITIONS? no
IF YES, DESCRIBE:

WATERSHED STORAGE: <1% HEADWATERS:
UNIFORM: X
IMMEDIATELY ABOVE SITE:

EXISTING STRUCTURE INFORMATION

STRUCTURE TYPE: Rolled beam with wooden deck
YEAR BUILT: 1912
CLEAR SPAN(NORMAL TO STREAM): 37'
VERTICAL CLEARANCE ABOVE STREAMBED: 16'
WATERWAY OF FULL OPENING: 500 sq. ft.
DISPOSITION OF STRUCTURE: Remove and replace
TYPE OF MATERIAL UNDER SUBSTRUCTURE: Ledge

WATER SURFACE ELEVATIONS AT:

Q2.33 =	690.1'	VELOCITY =	8.2 fps
Q10 =	693.0'	"	9.5 fps
Q25 =	694.4'	"	10.5 fps
Q50 =	695.7'	"	11.1 fps
Q100 =	696.7'	"	11.7 fps

LONG TERM STREAMBED CHANGES: Minimal due to ledge

IS THE ROADWAY OVERTOPPED BELOW Q100: no
FREQUENCY: N/A
RELIEF ELEVATION: 703.6'
DISCHARGE OVER ROAD @Q100: None

UPSTREAM STRUCTURE

TOWN: Topsham DISTANCE: 3435'
HIGHWAY # : TH 65 STRUCTURE #: BR 12
CLEAR SPAN: 32' CLEAR HEIGHT: 7'
YEAR BUILT: 1963 FULL WATERWAY: 220 sq. ft.
STRUCTURE TYPE: Prestress Concrete

DOWNSTREAM STRUCTURE

TOWN: Corinth DISTANCE: 1410'
HIGHWAY # : TH 1 STRUCTURE #: BR 8
CLEAR SPAN: 31' CLEAR HEIGHT: 12'
YEAR BUILT: 1934 FULL WATERWAY: 370 sq. ft.
STRUCTURE TYPE: Concrete T-beam

LRFR LOAD RATING FACTORS

LOADING LEVELS	TRUCK						
	H-20	HL-93	3S2	6 AXLE	3A. STR.	4A. STR.	5A. SEMI
TONNAGE	20	36	36	66	30	34.5	38
INVENTORY	1.88	1.01					
POSTING							
OPERATING	2.44	1.31	2.2	1.35	1.74	1.57	1.79
COMMENTS:							

PROPOSED STRUCTURE

STRUCTURE TYPE: NEXT beam bridge

CLEAR SPAN(NORMAL TO STREAM): 46'
VERTICAL CLEARANCE ABOVE STREAMBED: ~17'
WATERWAY OF FULL OPENING: 720 sq. ft.

WATER SURFACE ELEVATIONS AT:

Q2.33 =	688.8'	VELOCITY=	9.0 fps
Q10 =	691.2'	"	10.7 fps
Q25 =	692.3'	"	11.9 fps
Q50 =	693.3'	"	13.0 fps
Q100 =	694.1'	"	13.7 fps

IS THE ROADWAY OVERTOPPED BELOW Q100: no
FREQUENCY: N/A
RELIEF ELEVATION: 703.4'
DISCHARGE OVER ROAD @Q100: None

AVERAGE LOW ELEVATION OF SUPERSTRUCTURE: 701.2'
VERTICAL CLEARANCE: @ Q25 = 8.9'

SCOUR: Abutments will be founded on ledge and streambed is mostly ledge, so scour is not a concern.
REQUIRED CHANNEL PROTECTION: N/A

PERMIT INFORMATION

AVERAGE DAILY FLOW:	60 cfs	
ORDINARY LOW WATER:	30 cfs	DEPTH OR ELEVATION: 683.2'
ORDINARY HIGH WATER:	390 cfs	688.0'

TEMPORARY BRIDGE REQUIREMENTS

STRUCTURE TYPE: Bridge - to be removed before winter
CLEAR SPAN (NORMAL TO STREAM): 45' minumum'
VERTICAL CLEARANCE ABOVE STREAMBED: Minimum elevation 696.0'
WATERWAY AREA OF FULL OPENING: 480 sq. ft.

ADDITIONAL INFORMATION

TRAFFIC MAINTENANCE NOTES

1. MAINTAIN ONE-WAY TRAFFIC ON A TEMPORARY BRIDGE.
2. INSTALL AND MAINTAIN TRAFFIC SIGNALS.
3. SIDEWALKS ARE NOT NECESSARY
4. THE APPROACHES FOR THE TEMPORARY BRIDGE SHALL BE PAVED.

DESIGN VALUES

1. DESIGN LIVE LOAD		HL-93
2. FUTURE PAVEMENT	d_p:	- - -
3. DESIGN SPAN	L:	60.00 FT
4. MIN. MID-SPAN POS. CAMBER @ RELEASE (PRESTRESSED UNITS)	Δ:	- - -
5. PRESTRESSING STRAND (0.60 INCH DIAMETER - LOW RELAX)	f_y:	270 KSI
6. PRESTRESSED CONCRETE STRENGTH	f'_c:	7.0 KSI
7. PRESTRESSED CONCRETE RELEASE STRENGTH	f'_{ci}:	5.5 KSI
8. CONCRETE, HIGH PERFORMANCE CLASS AA	f'_c:	- - -
9. CONCRETE, HIGH PERFORMANCE CLASS A	f'_c:	- - -
10. CONCRETE, HIGH PERFORMANCE CLASS B	f'_c:	3.5 KSI
11. CONCRETE, CLASS C	f'_c:	- - -
12. REINFORCING STEEL	f_y:	60 KSI
13. STRUCTURAL STEEL AASHTO M270	f_y:	- - -
14. SOIL UNIT WEIGHT	γ:	0.140 KCF
15. NOMINAL BEARING RESISTANCE OF SOIL	q_n:	3.0 KSF
16. SOIL BEARING RESISTANCE FACTOR (REFER TO AASHTO LRFD)	ϕ:	0.45
17. NOMINAL BEARING RESISTANCE OF ROCK	q_n:	10.0 KSF
18. ROCK BEARING RESISTANCE FACTOR (REFER TO AASHTO LRFD)	ϕ:	0.45
19. NOMINAL AXIAL PILE RESISTANCE	q_p:	- - -
20. PILE YIELD STRENGTH ASTM A572	f_y:	- - -
21. PILE SIZE		- - -
22. EST. PILE LENGTH	L_p:	
23. PILE RESISTANCE FACTOR	ϕ:	- - -
24. LATERAL PILE DEFLECTION	Δ:	- - -
25. BASIC WIND SPEED	V_{3s}:	- - -
26. MINIMUM GROUND SNOW LOAD	p_g:	- - -
27. SEISMIC DATA PGA: - - -	S_s:	- - -
	S_1:	- - -

PROJECT NAME: **CORINTH**
PROJECT NUMBER: **BRO 1447(29)**

FILE NAME: **z01j292_pi.xls**
PROJECT LEADER: **G. BOGUE**
DESIGNED BY: **M. CHENETTE**
PRELIMINARY INFORMATION SHEET

PLOT DATE: 7/9/2014
DRAWN BY: **J. SOTER**
CHECKED BY: **G. BOGUE**
SHEET 2 OF 57

8/4/2014 12:12:29 PM V:\1953\active\19530795\transportation\drawing\z01j292_pi.dgn

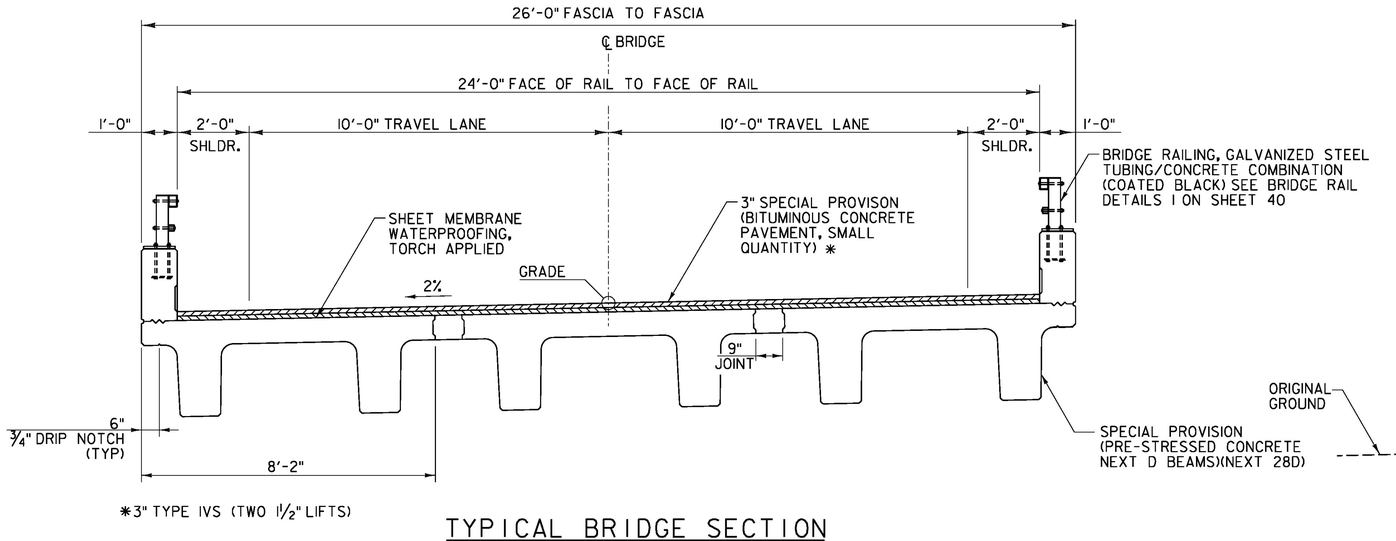

*3" TYPE IVS (TWO 1½" LIFTS)

TYPICAL BRIDGE SECTION

SCALE: ½" = 1'-0"

NOTES:

1. ALL STEEL COMPONENTS FOR BRIDGE RAIL AND BOX BEAM GUARDRAIL SHALL BE COATED BLACK IN ACCORDANCE WITH ASTM D7803 FOLLOWING GALVANIZING.
2. FOR PG BINDER REQUIREMENTS, SEE SPECIAL PROVISIONS FOR CONTRACT ITEM 900.680.

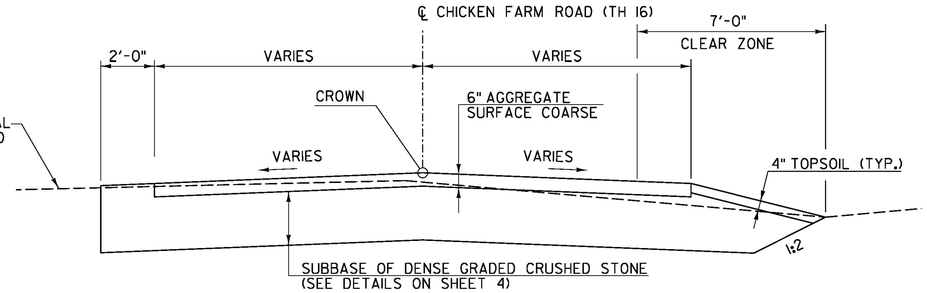

ROADWAY APPROACH SECTION (GRAVEL)

SCALE: ⅜"=1'-0"

STA. 100+30.00 - STA. 100+80.00

MATERIAL TOLERANCES
(IF USED ON PROJECT)

SURFACE	
- PAVEMENT (TOTAL THICKNESS)	+/- ¼"
- AGGREGATE SURFACE COARSE	+/- ½"
SUBBASE	+/- 1"
SAND BORROW	+/- 1"

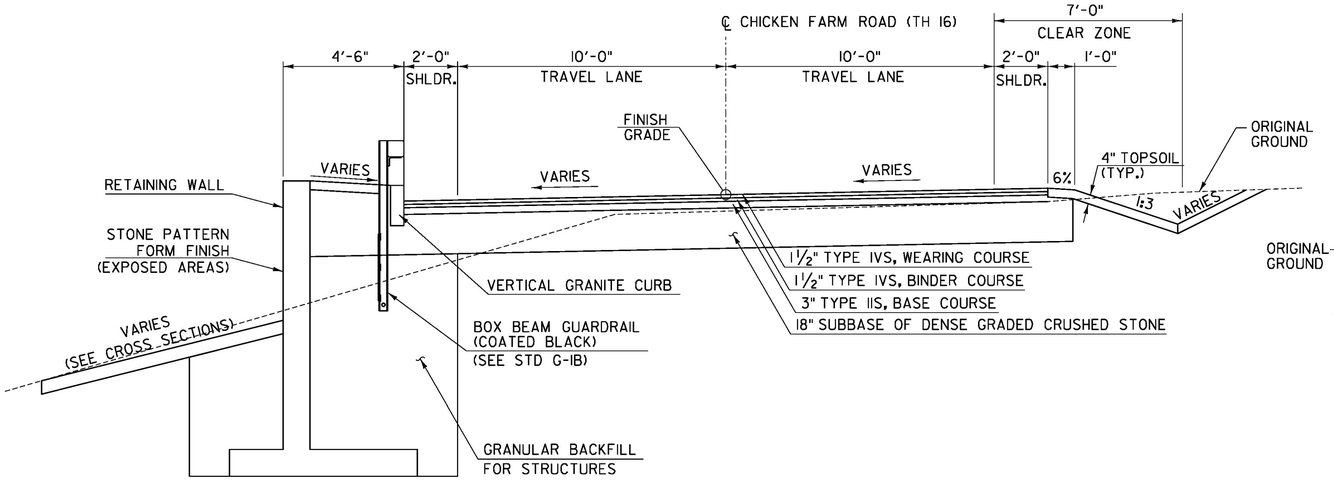

TYPICAL ROADWAY SECTION (PAVED)

SCALE: ⅜"=1'-0"

STA. 100+80.00 - STA. 102+04.40
STA. 102+69.60 - STA. 104+22.94

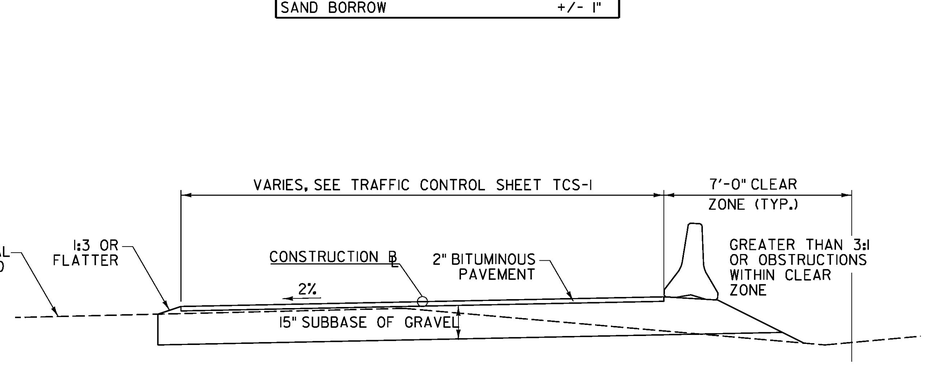

TYPICAL TEMPORARY DETOUR SECTION

SCALE: ⅜"=1'-0"

Stantec

PROJECT NAME:	CORINTH
PROJECT NUMBER:	BRO 1447(29)
FILE NAME: ...\drawing\z01j292_typ.dgn	PLOT DATE: 8/4/2014
PROJECT LEADER: G. BOGUE	DRAWN BY: E. ALLING
DESIGNED BY: M. CHENETTE	CHECKED BY: G. BOGUE
TYPICAL SECTIONS - TYP 1	SHEET 3 OF 57

8/4/2014 12:11:45 PM V:\1953\active\195310795\transportation\drawing\z01j292_typ.dgn

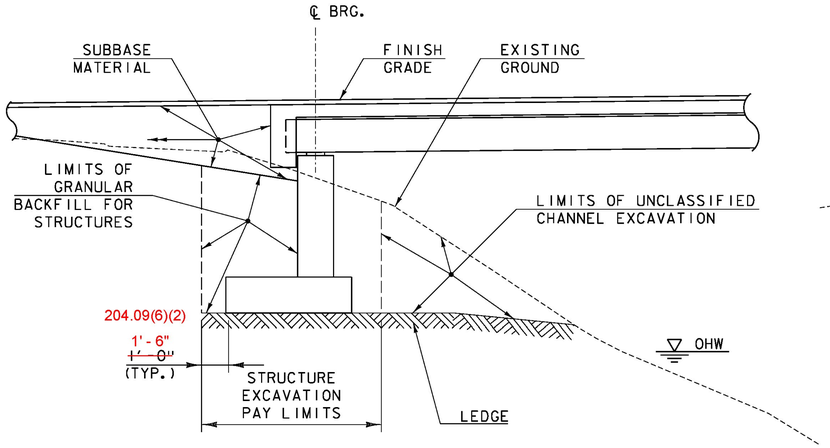

TYPICAL ABUTMENT EARTHWORK SECTION
(NOT TO SCALE)

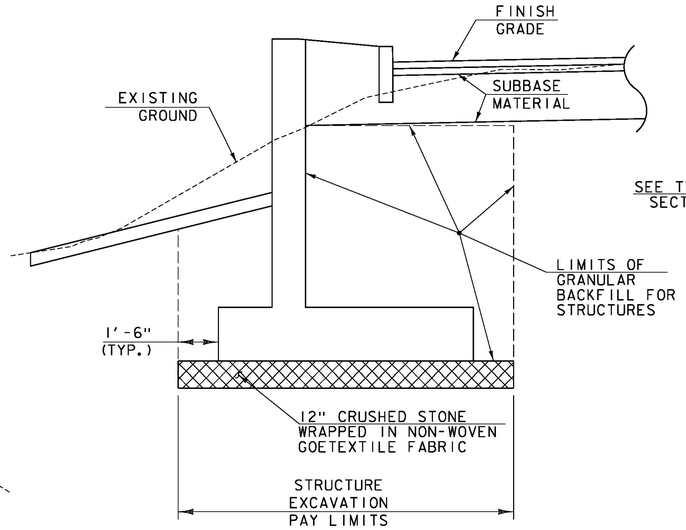

TYPICAL WINGWALL EARTHWORK SECTION ON SOIL
(NOT TO SCALE)

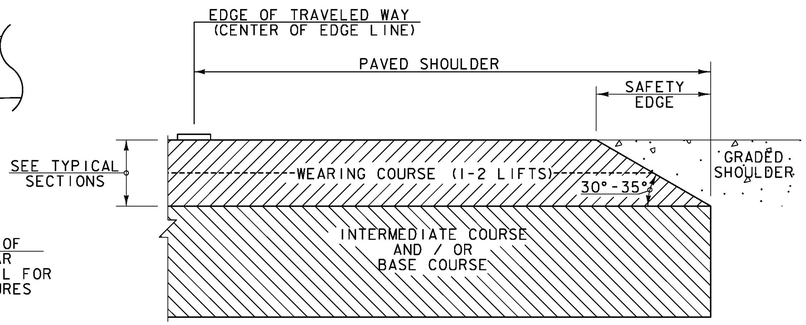

SAFETY EDGE DETAIL
NOT TO SCALE

NOTES:

1. THE EDGE OF PAVEMENT SHALL BE FORMED IN SUCH A WAY THAT THE BITUMINOUS CONCRETE PAVEMENT IS EXTRUDED OR COMPRESSED TO FORM THE 30 TO 35 DEGREE ANGLE. DEVICES THAT SIMPLY STRIKE-OFF THE MIX WITHOUT PROVIDING ANY COMPACTIVE EFFORT WILL NOT BE ALLOWED.

2. THE PAVED SHOULDER EXTENDS FROM THE EDGE OF TRAVELED WAY TO THE EDGE OF THE WEARING COURSE, INCLUDING THE "SAFETY EDGE".

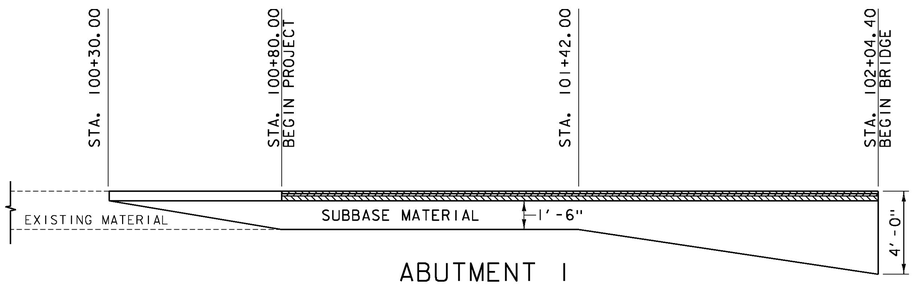

ABUTMENT 1 SUBBASE DETAIL
(ELEVATION IN CUT AND FILL)
(NOT TO SCALE)

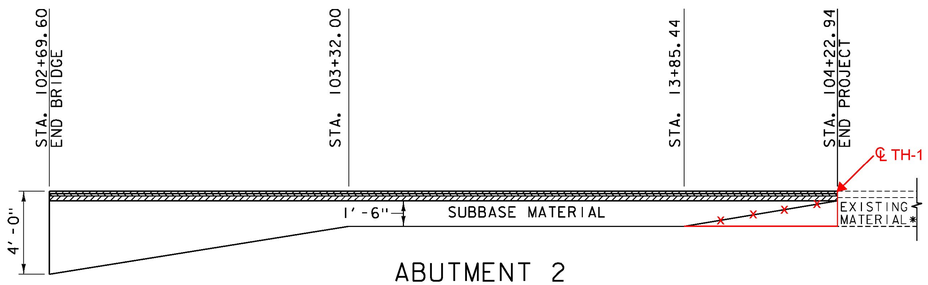

ABUTMENT 2 SUBBASE DETAIL
(ELEVATION IN CUT AND FILL)
(NOT TO SCALE)

* THICKNESSES OF EXISTING PAVEMENT AND SUBBASE NOT KNOWN.

Stantec

PROJECT NAME: CORINTH	
PROJECT NUMBER: BRO 1447(29)	
FILE NAME:...\drawing\z01292_typ.dgn	PLOT DATE: 8/4/2014
PROJECT LEADER: G. BOGUE	DRAWN BY: E. ALLING
DESIGNED BY: M. CHENETTE	CHECKED BY: G. BOGUE
TYPICAL SECTIONS - TYP 2	SHEET 4 OF 57

8/4/2014 12:14:45 PM V:\1953\active\195310795\transportation\drawing\z01292_typ.dgn

GENERAL PROJECT NOTES

1. ALL MATERIALS AND CONSTRUCTION SHALL CONFORM TO STATE OF VERMONT, AGENCY OF TRANSPORTATION STANDARD SPECIFICATIONS FOR CONSTRUCTION 2011, AND ITS LATEST REVISIONS, AND THE AASHTO LRFD BRIDGE DESIGN SPECIFICATIONS, FIFTH EDITION DATED 2010, AND ITS LATEST REVISIONS AND PCI NORTHEAST'S NEXT D BEAM STANDARDS DATED JANUARY 2010.

2. THE BRIDGE IS DESIGNED FOR AN HL-93 LIVE LOAD.

3. REMOVAL OF ANY PORTION OF THE EXISTING SUBSTRUCTURE ENCOUNTERED WITHIN THE LIMITS OF STRUCTURE EXCAVATION OR UNCLASSIFIED CHANNEL EXCAVATION SHALL BE CONSIDERED INCIDENTAL TO THOSE ITEMS.

4. ALL DIMENSIONS SHOWN IN THE PLANS ARE HORIZONTAL OR VERTICAL AT 68 DEGREES FAHRENHEIT, UNLESS NOTED OTHERWISE.

5. ALL CONSTRUCTION AND ACCESS SHALL BE WITHIN THE RIGHT OF WAY UNLESS SHOWN ON THE ROW PLANS OR APPROVED IN WRITING BY THE PROPERTY OWNER AND VTRANS ENVIRONMENTAL PERMITTING. THE CONTRACTOR SHALL COORDINATE DIRECTLY WITH THE PROPERTY OWNER(S) TO OBTAIN WRITTEN APPROVAL OF LAND USE OUTSIDE THE RIGHT OF WAY. THE CONTRACTOR SHALL SUBMIT COPIES OF THE WRITTEN PROPERTY AGREEMENTS TO THE RESIDENT ENGINEER.

6. TEMPORARY BRIDGE APPROACHES SHALL BE REMOVED AFTER CONSTRUCTION OF BRIDGE NO. 36 AND THE AREA DISTURBED SHALL BE RE-GRADED AND RE-VEGETATED. PAYMENT FOR REMOVAL OF TEMPORARY BRIDGE APPROACHES AND RE-VEGETATION SHALL BE INCLUDED IN THE UNIT PRICE BID FOR ITEM 528.10.

CONCRETE AND REINFORCING STEEL

7. ALL EXPOSED EDGES OF CONCRETE SHALL BE CHAMFERED 1 INCH.

8. JOINTS AND SCORE MARKS IN CONCRETE SHALL BE CONSTRUCTED AS INDICATED ON THE PLANS OR AS DIRECTED BY THE ENGINEER.

9. REINFORCING PLACEMENT TOLERANCES SHALL BE:
SPACING 1 INCH
CLEARANCE +/- 1/4 INCH

10. ITEM 514.10 WATER REPELLENT, SILANE SHALL BE APPLIED TO ALL EXPOSED CONCRETE SURFACES EXCEPT THE UNDERSIDE OF DECK BETWEEN DRIP BEADS.

11. ALL MILD STEEL REINFORCEMENT IN THE SUPERSTRUCTURE (INCLUDING BRIDGE RAILING AND CURTAIN WALLS) SHALL PROVIDE LEVEL II CORROSION RESISTANCE. LEVEL I CORROSION RESISTANCE IS ACCEPTABLE FOR THE SUBSTRUCTURE. PAYMENT FOR STEEL REINFORCEMENT IN BRIDGE RAILING WILL BE INCLUDED IN THE UNIT PRICE BID FOR CONTRACT ITEM 525.45. PAYMENT FOR ALL OTHER STEEL REINFORCEMENT IN SUPERSTRUCTURE WILL BE INCLUDED IN THE UNIT PRICE BID FOR CONTRACT ITEM 900.640. PAYMENT FOR STEEL REINFORCEMENT IN SUBSTRUCTURE CONCRETE WILL BE PAID UNDER CONTRACT ITEM 507.11.

12. CONCRETE FOR THE SUBSTRUCTURE SHALL BE HIGH PERFORMANCE CLASS B AND WILL BE PAID FOR UNDER ITEM 501.34, CONCRETE, HIGH PERFORMANCE CLASS B UNLESS OTHERWISE NOTED.

13. SURFACES OF BRIDGE SEATS UNDER BEARING DEVICES SHALL BE LEVEL. OTHER BRIDGE SEAT AREAS SHALL BE SLOPED 1/4 INCH PER FOOT. THE ABUTMENT SEATS SHALL BE SLOPED FULL WIDTH TOWARD MIDSPAN. THE ENTIRE BRIDGE SEAT SURFACE SHALL BE GIVEN A MAGNESIUM FLOAT FINISH.

14. NO CONCRETE SHALL BE PLACED IN THE ABUTMENTS OR WINGWALLS ABOVE THE ADJACENT BEAM SEAT ELEVATIONS UNTIL THE BEAMS HAVE BEEN SET.

15. ALL REINFORCING STEEL SHALL BE DETAILED AND FABRICATED USING PROCEDURES AND TOLERANCES IN ACCORDANCE WITH APPLICABLE PUBLICATIONS OF THE CONCRETE REINFORCING STEEL INSTITUTE.

16. MINIMUM COVER FOR REINFORCING STEEL IN THE ABUTMENTS AND WINGWALLS SHALL BE 3 INCHES UNLESS DETAILED OTHERWISE.

17. ALL EXPOSED VERTICAL FACES OF THE WINGWALLS SHALL BE FORMED WITH A "RIVER ROCK" TYPE FORM LINER PATTERN AND SHALL EXTEND ONE FOOT BELOW GRADE LINES. THE STONE PATTERN SHALL BE STAINED IN NATURAL COLORS USING CONCRETE ACID COLOR STAINS. THE FORM LINER SYSTEM AND STAIN COLORS SHALL BE DEMONSTRATED TO THE RESIDENT ENGINEER FOR APPROVAL IN A SAMPLE POUR, PRIOR TO CASTING THE ACTUAL SUBSTRUCTURE COMPONENTS. ALL COSTS ASSOCIATED WITH THE CONCRETE FORM LINER , COLOR STAINING, AND TEST POUR WILL BE CONSIDERED INCIDENTAL TO ITEM 501.34, CONCRETE, HIGH PERFORMANCE CLASS B.

NEXT D BEAMS

18. NEXT D BEAMS ARE A NON-PROPRIETARY SHAPE DEVELOPED BY PCI NORTHEAST (PCINE). STANDARDIZED SECTION PROPERTIES AND DETAILS MAY BE FOUND AT HTTP://PCINE.ORG.

19. DESIGN VALUES
    A. CONCRETE COMPRESSIVE STRENGTH f'c = 7000 PSI
    B. CONCRETE COMPRESSIVE STRENGTH AT RELEASE f'CI = 5500 PSI
    C. PRE-STRESSING STRANDS: 0.6 INCH DIAMETER, 270 KSI, LOW-RELAXATION 7-WIRE STRANDS
    D. ASSUMED MODULUS OF ELASTICITY IS 28,500 KSI
    E. JACKING FORCE PER STRAND = 44 KIPS
    F. SERVICE LOADS

MEMBER MOMENT		637.0	K-FT (PER MEMBER)
SUPERIMPOSED DEADLOAD MOMENT	244.0	K-FT (PER MEMBER)	
LIVE LOAD AND IMPACT MOMENT		1056.2	K-FT (PER MEMBER)
DEAD LOAD REACTION		58.8	KIPS (PER MEMBER)
LIVE LOAD AND IMPACT REACTION		94.0	KIPS (PER MEMBER)
TOTAL REACTION	152.8	KIPS (PER MEMBER)	
FINAL CAMBER		3	INCHES

20. THE CURTAIN WALLS MAY BE CAST ONTO THE ENDS OF THE NEXT BEAMS BY THE FABRICATOR OR CAST-IN-PLACE. THE CONCRETE SHALL MEET THE REQUIREMENTS OF SECTION 540. PAYMENT FOR THE CURTAIN WALLS SHALL BE INCLUDED IN ITEM 900.640 "SPECIAL PROVISION (PRE-STRESSED CONCRETE NEXT D BEAMS) (NEXT 28D)." IF THE CURTAIN WALLS ARE CAST-IN-PLACE THE CONTRACTOR SHALL SUBMIT DETAILED FABRICATION DRAWINGS SHOWING SEQUENCE OF CONSTRUCTION, LIMIT OF CONCRETE PLACEMENT AND REINFORCING DETAILS FOR APPROVAL.

21. A RETARDING ADMIXTURE MAY BE PLACED ON THE FORMS FOR THE FLANGE KEYWAYS WHERE THE ENDS OF FLANGES ARE IN CONTACT WITH GROUT. THE FORMS FOR THE FLANGE ENDS SHALL THEN BE STRIPPED AND THE FLANGE ENDS POWER WASHED WITH WATER TO EXPOSE THE AGGREGATE DURING FABRICATION OF THE BEAMS. THE FLANGE ENDS SHALL BE POWER WASHED WITH WATER AGAIN PRIOR TO ERECTION OF THE BEAMS. THIS WORK WILL BE CONSIDERED INCIDENTAL TO ITEM 900.640 SPECIAL PROVISION (PRESTRESSED CONCRETE NEXT D BEAMS)(NEXT 28D).

22. FILLING FLANGE CONNECTION WILL BE PAID UNDER TIEM 900.608 SPECIAL PROVISION (HIGH PERFORMANCE CONCRETE, RAPID SET)(FPQ).

23. GROUT AND CURE THE FLANGE CONNECTION BETWEEN BEAMS PRIOR TO CASTING THE BRIDGE RAIL. THE DESIGN OF THE NEXT BEAMS IS BASED ON THE FLANGES BEING FULLY CONNECTED PRIOR TO CONSTRUCTION OF THE RAIL.

24. METHOD OF FORMING FLANGE CONNECTION SHALL BE DETERMINED BY THE CONTRACTOR. THE FORMS SHALL BE REMOVABLE AND ABLE TO ACCOMMODATE DIFFERENTIAL CAMBER. FORM SUPPORTS SHALL NOT PENETRATE THROUGH THE TOP OF THE POUR UNLESS APPROVED BY THE ENGINEER. FIELD DRILLING INTO THE NEXT BEAMS WILL NOT BE ALLOWED.

25. THE FABRICATOR MAY ALTER THE DESIGN AS DETAILED IN THESE PLANS TO ACCOMMODATE THEIR SPECIFIC OPERATION. ANY ALTERATIONS MUST BE DETAILED AND DESIGNED BY A PROFESSIONAL ENGINEER AND SUBMITTED AS FABRICATION DRAWINGS IN ACCORDANCE WITH THE CONTRACT DOCUMENTS.

GEOTECHNICAL

26. THE TOP OF THE FOOTING ELEVATION WAS SET BASED ON THE LOWEST ANTICIPATED LEDGE ELEVATION DETERMINED FROM THE BORINGS. LEDGE ELEVATIONS MAY VARY AND ADJUSTMENTS IN BOTTOM OF FOOTING ELEVATION AND GEOMETRY ARE EXPECTED.

27. IN AREAS WHERE THE FOOTINGS WILL BEAR ON BEDROCK ALL SOIL, WEATHERED ROCK AND FRACTURED ROCK SHALL BE REMOVED FROM THE BEDROCK SURFACE PRIOR TO PLACING CONCRETE FOR THE FOOTING.

28. UPON COMPLETION OF THE EXCAVATION FOR SUBSTRUCTURES FOUNDED ON BEDROCK AND PRIOR TO PLACING FORMWORK, THE ENGINEER SHALL NOTIFY THE PROJECT MANAGER AND THE VTRANS STATE GEOLOGIST. THE GEOLOGIST WILL DETERMINE IF THE BEDROCK IS COMPETENT TO OBTAIN THE NOMINAL BEARING RESISTANCE AS SHOWN ON THE PLANS. THE CONTRACTOR SHALL NOTIFY THE GEOLOGIST 72 HOURS PRIOR TO WHEN THE ANALYSIS WILL BE NEEDED.

29. AT THE FOOTING SUBGRADE THE SLOPE OF THE BEDROCK SURFACE SHALL BE FLATTER THEN 6 HORIZONTAL TO 1 VERTICAL. WHERE THE BEDROCK SURFACE EXCEEDS A SLOPE OF 6 HORIZONTAL TO 1 VERTICAL THE BEDROCK SURFACE SHALL BE BENCHED TO CREATE STEPS OR EXCAVATED COMPLETELY TO A SLOPE LESS THEN 6 HORIZONTAL TO 1 VERTICAL.

30. A MAXIMUM OF 6" OVER BREAKAGE WILL BE REPLACED WITH "HIGH PERFORMANCE CLASS B CONCRETE. OVER BREAKAGE BEYOND 6" SHALL BE REPLACED WITH "HIGH PERFORMANCE CLASS B CONCRETE" AT THE EXPENSE OF THE CONTRACTOR.

31. THE LIMITS OF THE SUBFOOTING SHALL BE 1'-0" OUTSIDE THE LIMITS OF THE FOOTING.

32. THE ABUTMENTS HAVE BEEN DESIGNED FOR THE TOP OF THE FOOTING ELEVATIONS SHOWN THE PLANS. IF THE LEDGE ELEVATION IS GREATER THAN 1'-0" BELOW THE DESIGN BOTTOM OF FOOTING, A SUBFOOTING SHALL BE POURED SO THAT THE DESIGN TOP OF FOOTING IS AT THE REQUIRED ELEVATION, USING "CONCRETE, CLASS C"

33. FOR ALL SUBSTRUCTURES, WHERE LEDGE IS WITHIN ONE FOOT FROM THE BOTTOM OF THE FOOTING AS DESIGNED, THE FOOTING MAY BE POURED TO THE TOP OF THE LEDGE USING "CONCRETE, HIGH PERFORMANCE CLASS B"

34. IF LEDGE IS ABOVE THE DESIGN BOTTOM OF FOOTING, THE FOOTING MAY BE RAISED. BEFORE ANY UPWARD ADJUSTMENT IS MADE IN FOOTING ELEVATION, THE PROJECT MANAGEER SHALL BE CONTACTED AND PROVIDED WITH A LEDGE PROFILE. NO FURTHER WORK SHALL BE DONE UNTIL APPROVAL OF THE CONFIGURATION IS RECEIVED.

35. #8 DOWELS SHALL BE DRILLED AND GROUTED INTO THE LEDGE AS SHOWN ON THE PLANS. THE DOWELS SHALL HAVE A MINIMUM 2'-0" EMBEDMENT INTO THE LEDGE AND SHALL EXTEND INTO THE FOOTING A MINIMUM OF 1'-6". IN AREAS WHERE A SUBFOOTING IS REQUIRED #8 DOWELS WILL ALSO BE USED AT THE INTERFACE BETWEEN SUBFOOTING AND FOOTING. THE DRILLING AND GROUTING SHALL BE PAID FOR UNDER THE ITEM 507.16, "DRILLING AND GROUTING DOWELS".

36. ABUTMENT FOOTINGS SHALL BEAR ON LEDGE. WINGWALL FOOTINGS MAY BEAR ON LEDGE OR SOIL.

37. PEAT OR OTHER ORGANIC SOILS ENCOUNTERED WITHIN THE LIMITS OF WORK SHALL BE REMOVED THROUGH OVER-EXCAVATION AS DIRECTED BY THE ENGINEER. PAYMENT WILL BE IN ACCORDANCE WITH THE GOVERNING EXCAVATION ITEM. IN FOUNDATION BEARING AREAS, OVER-EXCAVATED AREAS SHALL BE BACKFILLED WITH GRANULAR BACKFILL FOR STRUCTURES.

TRAFFIC CONTROL

38. THE TRAFFIC CONTROL PLAN INCLUDED IN THIS PLAN SET IS SCHEMATIC ONLY AND SHOULD BE USED AS A REFERENCE. THE CONTRACTOR SHALL DEVELOP AND IMPLEMENT A SITE SPECIFIC TRAFFIC CONTROL PLAN FOR TEMPORARY BRIDGE PER THE LATEST VERSION OF THE MANUAL ON UNIFORM TRAFFIC CONTROL DEVICES. THE CONTRACTOR SHALL ALLOW THE ENGINEER 14 CALENDAR DAYS TO REVIEW AND ACCEPT THE PROPOSED PLANS BEFORE THEY ARE TO BE IMPLEMENTED. NO WORK SHALL COMMENCE UNTIL THE TRAFFIC CONTROL PLAN HAS BEEN APPROVED.

39. DEVELOPMENT AND IMPLEMENTATION OF TRAFFIC CONTROL PLAN SHALL BE PAID FOR UNDER ITEM 641.10 TRAFFIC CONTROL.

40. ACCESS TO ALL EXISTING SIDE ROADS, DRIVES AND PARKING AREAS SHALL BE MAINTAINED AT ALL TIMES DURING CONSTRUCTION.

41. DESIGN OF THE SIGNAL SUPPPORTS AND ANY REQUIRED GUYING IS THE RESPONSIBILITY OF THE CONTRACTOR.

42. SIGNAL TIMING / TIMING ADJUSTMENTS REQUESTED BY THE ENGINEER SHALL BE ACCOMPLISHED WITHIN A 48 HOUR PERIOD AND PAYMENT SHALL BE INCIDENTAL TO ITEM 678.40, "TEMPORARY TRAFFIC SIGNAL SYSTEM". THE ENGINEER SHALL MAKE SEVERAL TRIAL RUNS TO DETERMINE THE PROPER ALL-RED CLEARANCE INTERVAL.

43. SIGNAL FACES SHALL BE LED AND CONSIST OF 12" LENSES. (RED, YELLOW, AND GREEN).

44. THE BOTTOM OF THE HOUSING OF A SIGNAL FACE SUSPENDED OVER A ROADWAY SHALL NOT BE LESS THAN 16.5 FEET NOR MORE THAN 19 FEET ABOVE THE PAVEMENT GRADE AT THE CENTER OF THE ROADWAY. THE BOTTOM OF A SIGNAL FACE NOT MOUNTED OVER A ROADWAY SHALL NOT BE LESS THAN 8 FEET NOR MORE THAN 15 FEET ABOVE THE GROUND. CAUTION SHOULD BE USED TO INSURE COMPLIANCE WITH THE HEIGHT REQUIREMENTS IN THE EVENT THE NEW APPROACH GRADES DIFFER SIGNIFICANTLY FROM THE OLD ROAD GRADE.

45. SIGNAL FACES FOR ANY ONE APPROACH SHALL NOT BE LESS THAN 8 FEET APART MEASURED HORIZONTALLY BETWEEN CENTER FACES.

46. SIGNAL HEADS MAY BE HUNG ON A SPAN WIRE OR ON A CANTILEVER MAST ARM. AT LEAST ONE SIGNAL HEAD SHALL BE UNMISTAKABLY IN LINE WITH THE CENTER OF APPROACHING TRAFFIC AT ALL TIMES. THE SECOND SIGNAL HEAD MAY BE POST MOUNTED, LOCATED AT A DISTANCE OF NO GREATER THAN 14.5 FEET FROM THE CENTER OF THE APPROACH LANE WHEN THE STOP BAR IS 40 FEET FROM THE SIGNAL HEAD. CONSULT THE CURRENT EDITION OF THE M.U.T.C.D. FOR ADDITIONAL INFORMATION CONCERNING SIGNAL PLACEMENT.

47. THE SIGNAL SYSTEM SHALL CONSIST OF POLES, SIGNS AND POSTS, WARNING SIGNS, LUMINARIES, FLASHING BEACONS, ASSOCIATED PAVEMENT MARKINGS, AND SIGNAL EQUIPMENT TO PROVIDE FOR AN ADEQUATE DESIGN. IT ALSO INCLUDES PERMITS AND COSTS ASSOCIATED WITH PROVIDING ELECTRICAL POWER.

48. INSTALL WIRING BETWEEN SIGNAL POLES BY WHATEVER MEANS POSSIBLE OR CONVENIENT TO PROVIDE FOR A SAFE INSTALLATION. ATTACHMENT TO UTILITY POLES TO BE COORDINATED BY THE CONTRACTOR WITH THE UTILITY COMPANY.

49. PLACE TEMPORARY POLES BEHIND GUARDRAIL WHERE POSSIBLE.

50. POLES SUPPORTING SPAN WIRES AND/OR MAST ARMS SHALL BE ADEQUATELY BRACED OR GUYED AND SHALL BE PLACED SO AS TO CREATE A HAZARD TO THE TRAVELING PUBLIC.

51. ALL TEMPORARY SIGNAL EQUIPMENT, SIGNS, ETC., SHALL BELONG TO THE CONTRACTOR AT THE END OF THE PROJECT AND THE CONTRACTOR SHALL BE RESPONSIBLE FOR THEIR REMOVAL INCLUDING ANY TEMPORARY PAVEMENT MARKINGS, UTILITY POLES, WIRES, ETC.

52. A 250 WATT MER/150 WATT HSP LUMINAIRE AND MAST ARM SHALL BE PROVIDED ON A POLE ON EACH APPROACH AT A MOUNTING HEIGHT OF 30 FEET ABOVE THE ROADWAY CENTERLINE. THE INTENT IS TO LIGHT UP THE AREA AROUND THE SIGNAL HEADS AND STOP BAR FOR INCREASED VISIBILITY. THE ENGINEER SHALL DETERMINE THE ADEQUACY OF THE LIGHTING AND DIRECT CHANGES IF THE LIGHTING IS INSUFFICIENT. LIGHTING SHALL BE PAID INCIDENTAL TO ITEM 678.40, "TEMPORARY TRAFFIC SIGNAL SYSTEM".

53. STOP BARS SHALL BE LOCATED A MINIMUM OF 40' AND A MAXIMUM OF 120' FROM THE NEAREST SIGNAL HEAD.

54. SEE STD. E-140 FOR "STOP HERE ON RED" SIGN DETAIL. SEE STD. E-121 FOR SIGN PLACEMENT, SEE STD. E-171A AND E-172 FOR ADDITIONAL INFORMATION ON SIGNALS.

55. ALL ELECTRIC WORK SHALL MEET THE REQUIREMENTS OF THE NATIONAL ELECTRICAL CODE AND STATE INSPECTOR.

56. ALL STOP SIGNS AND ANY TRAFFIC SIGNS MADE IRRELEVANT DUE TO THE TEMPORARY SIGNAL SHALL BE COVERED DURING OPERATION OF THE TEMPORARY SIGNAL, OR AT THE DISCRETION OF THE ENGINEER. THE COSTS OF COVERING AND UNCOVERING THESE SIGNS SHALL BE PAID INCIDENTAL TO ITEM 641.10, "TRAFFIC CONTROL".

57. THE CONTRACTOR SHALL BE RESPONSIBLE FOR DETERMINING SIGNAL PHASING. THE CONTRACTOR SHALL SUBMIT PHASING DIAGRAM TO THE ENGINEER FOR APPROVAL. THE CONTRACTOR SHALL MAKE SIGNALS OPERATIONAL ONLY AFTER RECEIVING APPROVAL OF THE PHASING DIAGRAM BY THE ENGINEER. DEVELOPMENT OF THE PHASING DIAGRAM SHALL BE PAID INCIDENTAL TO ITEM 678.40, "TEMPORARY TRAFFIC SIGNAL SYSTEM".

Stantec

PROJECT NAME: CORINTH
PROJECT NUMBER: BRO 1447(29)

FILE NAME: ...\drawing\z01j292_gen_nts.dgn
PROJECT LEADER: G. BOGUE
DESIGNED BY: G. BOGUE
PROJECT NOTES

PLOT DATE: 8/4/2014
DRAWN BY: L. BUXTON
CHECKED BY: M. CHENETTE
SHEET 5 OF 57

8/4/2014 12:11:46 PM V:\1953\active\195310795\transportation\drawing\z01j292_gen_nts.dgn

STATE OF VERMONT
AGENCY OF TRANSPORTATION

QUANTITY SHEET 1

SUMMARY OF ESTIMATED QUANTITIES											TOTALS		DESCRIPTIONS				DETAILED SUMMARY OF QUANTITIES		
						ROADWAY	EROSION CONTROL	BRIDGE	FULL C.E. ITEMS		GRAND TOTAL	FINAL	UNIT	ITEMS	ITEM NUMBER	ROUND	QUANTITIES	UNIT	ITEMS
																			FILL REQUIRED
						1					1		LS	CLEARING AND GRUBBING, INCLUDING INDIVIDUAL TREES AND STUMPS	201.10		21	CY	MEASURED AREA FILL
																	39	CY	LESS FACTORED SOLID ROCK EXCAVATION
						1					1		EACH	REMOVING MEDIUM TREES	201.15		0	CY	LESS DISPLACEMENT OF ANY LARGE BURIED STRUCTURES
																	-18	CY	NET MEASURED AREA FILL
						570					570		CY	COMMON EXCAVATION	203.15		-21	CY	1.15 X NET MEASURED AREA FILL = FACTORED FILL
						30		125			155		CY	SOLID ROCK EXCAVATION	203.16				**MEASURED AREA MATERIAL AVAILABLE FOR FILL**
																	564	CY	EARTH EXCAVATION
								70			70		CY	UNCLASSIFIED CHANNEL EXCAVATION	203.27		220	CY	TRENCH EXCAVATION OF EARTH
																	70	CY	CHANNEL EXCAVATION
						220					220		CY	TRENCH EXCAVATION OF EARTH	204.20		770	CY	STRUCTURE EXCAVATION
																	1624	CY	TOTAL MATERIAL AVAILABLE FOR FILL
						11					11		CY	TRENCH EXCAVATION OF ROCK	204.21				
																	1624	**CY**	**WASTE**
						1					1		CY	TRENCH EXCAVATION OF EARTH, EXPLORATORY (N.A.B.I.)	204.22				
								770			770		CY	STRUCTURE EXCAVATION	204.25				
								620			620		CY	GRANULAR BACKFILL FOR STRUCTURES	204.30				
						610					610		CY	SUBBASE OF DENSE GRADED CRUSHED STONE	301.35				
						15					15		CY	AGGREGATE SURFACE COURSE	401.10				
						1					1		LU	PRICE ADJUSTMENT, ASPHALT CEMENT (N.A.B.I.)	406.50				
								280			280		CY	CONCRETE, HIGH PERFORMANCE CLASS B	501.34				
								21900			21900		LB	REINFORCING STEEL, LEVEL I	507.11				
								216			216		LF	DRILLING AND GROUTING DOWELS	507.16				
								20			20		GAL	WATER REPELLENT, SILANE	514.10				
								56			56		LF	BRIDGE EXPANSION JOINT, ASPHALTIC PLUG	516.10				
								175			175		SY	SHEET MEMBRANE WATERPROOFING, TORCH APPLIED	519.20				
								131			131		LF	BRIDGE RAILING, GALVANIZED STEEL TUBING/CONCRETE COMBINATION (COATED BLACK)	525.45				
								1			1		LS	ONE-WAY TEMPORARY BRIDGE (1620 SF - EST.)	528.10				
								1			1		EACH	REMOVAL OF STRUCTURE (650 SF - EST.)	529.15				
								12			12		EACH	BEARING DEVICE ASSEMBLY, STEEL REINFORCED ELASTOMERIC PAD	531.17				
								25			25		CY	CONCRETE, CLASS C	541.30				
														BEGIN OPTION AA					
						172					172		LF	18" CAAP .060 (2-2/3 X 1/2)	601.0215				
						172					172		LF	18" PCCSP .064 (2-2/3 X 1/2)	601.0415				
						172					172		LF	18" RCP CLASS III	601.0815				
						172					172		LF	18" CPEP(SL)	601.2615				
														END OPTION AA					
														BEGIN OPTION BB					
						1					1		EACH	18" CSPES .064 (2-2/3 X 1/2)	601.6015				
						1					1		EACH	18" CAAPES .060 (2-2/3 X 1/2)	601.6215				
						1					1		EACH	18" RCPES CLASS III	601.6815				
														END OPTION BB					
						3					3		EACH	PRECAST REINFORCED CONCRETE DROP INLET WITH CAST IRON GRATE	604.18				
						10					10		HR	BULLDOZER RENTAL, TYPE I	608.10				
						10					10		HR	POWER GRADER RENTAL	608.15				
						10					10		HR	ALL PURPOSE EXCAVATOR RENTAL, TYPE I	608.25				
						5					5		HR	POWER BROOM RENTAL, TYPE I	608.30				

Stantec

PROJECT NAME: CORINTH
PROJECT NUMBER: BRO 1447(29)

FILE NAME: ...\drawing\z01j292_frm.dgn
PROJECT LEADER: G. BOGUE
DESIGNED BY: M. CHENETTE
QUANTITY SHEET – QTY 1

PLOT DATE: 8/4/2014
DRAWN BY: E. ALLING
CHECKED BY: G. BOGUE
SHEET 6 OF 57

STATE OF VERMONT
AGENCY OF TRANSPORTATION

QUANTITY SHEET 2

SUMMARY OF ESTIMATED QUANTITIES				TOTALS		DESCRIPTIONS				DETAILED SUMMARY OF QUANTITIES		
ROADWAY	EROSION CONTROL	BRIDGE	FULL C.E. ITEMS	GRAND TOTAL	FINAL	UNIT	ITEMS	ITEM NUMBER	ROUND	QUANTITIES	UNIT	ITEMS
10				10		HR	TRUCK RENTAL	608.37				
10				10		HR	LOADER RENTAL, TYPE I	608.40				
0.5				0.5		MGAL	DUST CONTROL WITH WATER	609.10				
0.5				0.5		TON	DUST AND ICE CONTROL WITH CALCIUM CHLORIDE	609.15				
10				10		CY	STONE FILL, TYPE III	613.12				
150				150		LF	VERTICAL GRANITE CURB	616.21				
2				2		EACH	RELOCATE MAILBOX, SINGLE SUPPORT	617.10				
40				40		LF	REMOVAL OF EXISTING FENCE	620.55				
141				141		LF	BOX BEAM GUARDRAIL (COATED BLACK)	621.30				
		4		4		EACH	GUARDRAIL APPROACH SECTION, GALVANIZED 2 RAIL BOX BEAM (COATED BLACK)	621.72				
95				95		LF	REMOVAL AND DISPOSAL OF GUARDRAIL	621.80				
160				160		HR	FLAGGERS	630.15				
			1	1		LS	FIELD OFFICE, ENGINEERS	631.10				
			1	1		LS	TESTING EQUIPMENT, CONCRETE	631.16				
			3000	3000		DL	FIELD OFFICE TELEPHONE (N.A.B.I.)	631.26				
1				1		LS	MOBILIZATION/DEMOBILIZATION	635.11				
1				1		LS	TRAFFIC CONTROL	641.10				
3				3		EACH	PORTABLE CHANGEABLE MESSAGE SIGN	641.15				
100				100		LF	4 INCH YELLOW LINE	646.21				
20				20		LF	24 INCH STOP BAR	646.26				
4				4		EACH	LETTER OR SYMBOL	646.30				
30		150		180		SY	GEOTEXTILE UNDER STONE FILL	649.31				
	75			75		SY	GEOTEXTILE FOR SILT FENCE	649.51				
25				25		LB	SEED	651.15				
25				25		LB	SEED, WINTER RYE	651.17				
150				150		LB	FERTILIZER	651.18				
0.7				0.7		TON	AGRICULTURAL LIMESTONE	651.20				
0.7				0.7		TON	HAY MULCH	651.25				**900.680 SPECIAL PROVISION (BITUMINOUS CONCRETE PAVEMENT, SMALL QUANTITY)**
170				170		CY	TOPSOIL	651.35		136	TON	TYPE IIS
										171	TON	TYPE IVS
	1			1		LS	EPSC PLAN	652.10				
										307	TON	SUBTOTAL
	80			80		HR	MONITORING EPSC PLAN	652.20		8	TON	ROUND
										315	TON	TOTAL
	1			1		LU	MAINTENANCE OF EPSC PLAN (N.A.B.I.)	652.30				
	800			800		SY	TEMPORARY EROSION MATTING	653.20				
	10			10		CY	TEMPORARY STONE CHECK DAM, TYPE I	653.25				
	40			40		CY	VEHICLE TRACKING PAD	653.35				
	2			2		EACH	INLET PROTECTION DEVICE, TYPE I	653.40				
700				700		LF	PROJECT DEMARCATION FENCE	653.55				
54				54		SF	TRAFFIC SIGNS, TYPE A	675.20				
140				140		LF	SQUARE TUBE SIGN POST AND ANCHOR	675.341				
8				8		EACH	REMOVING SIGNS	675.50				

Stantec

PROJECT NAME: CORINTH
PROJECT NUMBER: BRO 1447(29)

FILE NAME: ...\drawing\z0ij292_frm.dgn
PROJECT LEADER: G. BOGUE
DESIGNED BY: M. CHENETTE
QUANTITY SHEET - QTY 2

PLOT DATE: 8/4/2014
DRAWN BY: E. ALLING
CHECKED BY: G. BOGUE

STATE OF VERMONT
AGENCY OF TRANSPORTATION

QUANTITY SHEET 3

SUMMARY OF ESTIMATED QUANTITIES				TOTALS		DESCRIPTIONS				DETAILED SUMMARY OF QUANTITIES		
ROADWAY	EROSION CONTROL	BRIDGE	FULL C.E. ITEMS	GRAND TOTAL	FINAL	UNIT	ITEMS	ITEM NUMBER	ROUND	QUANTITIES	UNIT	ITEMS
1				1		EACH	TEMPORARY TRAFFIC SIGNAL SYSTEM	678.40				
		3		3		CY	SPECIAL PROVISION (HIGH PERFORMANCE CONCRETE, RAPID SET)(FPQ)	900.608				
	1			1		EACH	SPECIAL PROVISION (INLET PROTECTION DEVICE, FILTER FIBER)	900.620				
		189		189		LF	SPECIAL PROVISION (PRESTRESSED CONCRETE NEXT D BEAMS)(NEXT 28 D)	900.640				
1				1		LU	SPECIAL PROVISION (MAT DENSITY PAY ADJUSTMENT, SMALL QUANTITY)(N.A.B.I.)	900.650				
1				1		LU	SPECIAL PROVISION (MIXTURE PAY ADJUSTMENT)(N.A.B.I.)	900.650				
280		35		315		TON	SPECIAL PROVISION (BITUMINOUS CONCRETE PAVEMENT, SMALL QUANTITY)	900.680				
4		1		5		CWT	SPECIAL PROVISION (EMULSIFIED ASPHALT)(RS-1H OR CRS-1H)	900.683				

Stantec

PROJECT NAME: CORINTH
PROJECT NUMBER: BRO 1447(29)

FILE NAME: ...\drawing\z0lj292_frm.dgn
PROJECT LEADER: G. BOGUE
DESIGNED BY: M. CHENETTE
QUANTITY SHEET - QTY 3

PLOT DATE: 8/4/2014
DRAWN BY: E. ALLING
CHECKED BY: G. BOGUE
SHEET 8 OF 57

GENERAL INFORMATION

SYMBOLOGY LEGEND NOTE

THE SYMBOLOGY ON THIS SHEET IS INTENDED TO COVER STANDARD CONVENTIONAL SYMBOLOGY. THE SYMBOLOGY IS USED FOR EXISTING & PROPOSED FEATURES WITH HEAVIER LINEWEIGHT, IN COMBINATION WITH PROJECT ANNOTATION, AS NOTED ON PROJECT PLAN SHEETS. THIS LEGEND SHEET COVERS THE BASICS. SYMBOLOGY ON PLANS MAY VARY, PLAN ANNOTATIONS AND NOTES SHOULD BE USED TO CLARIFY AS NEEDED.

R.O.W. ABBREVIATIONS (CODES) & SYMBOLS

POINT	CODE	DESCRIPTION
	CH	CHANNEL EASEMENT
	CONST	CONSTRUCTION EASEMENT
	CUL	CULVERT EASEMENT
	D&C	DISCONNECT & CONNECT
	DIT	DITCH EASEMENT
	DR	DRAINAGE EASEMENT
	DRIVE	DRIVEWAY EASEMENT
	EC	EROSION CONTROL
	I&M	INSTALL & MAINTAIN EASEMENT
	LAND	LANDSCAPE EASEMENT
	SR	SLOPE RIGHT
	UE	UTILITY EASEMENT
	(P)	PERMANENT EASEMENT
	(T)	TEMPORARY EASEMENT
■	BNDNS	BOUND SET
⧈	BNDNS	BOUND TO BE SET
●	IPNS	IRON PIN SET
◎	IPNS	IRON PIN TO BE SET
⊠	CALC	CALCULATED ROW POINT
[DISTANCE]		DISTANCE CARRIED ON NEXT SHEET

COMMON TOPOGRAPHIC POINT SYMBOLS

POINT	CODE	DESCRIPTION
	APL	BOUND APPARENT LOCATION
	BM	BENCH MARK
	BND	BOUND
	CB	CATCH BASIN
	COMB	COMBINATION POLE
	DITHR	DROP INLET THROATED DNC
	EL	ELECTRIC POWER POLE
	FPOLE	FLAGPOLE
	GASFIL	GAS FILLER
	GP	GUIDE POST
	GSO	GAS SHUT OFF
	GUY	GUY POLE
	GUYW	GUY WIRE
	GV	GATE VALUE
	H	TREE HARDWOOD
	HCTRL	CONTROL HORIZONTAL
	HVCTRL	CONTROL HORIZ. & VERTICAL
	HYD	HYDRANT
	IP	IRON PIN
	IPIPE	IRON PIPE
	LI	LIGHT - STREET OR YARD
	MB	MAILBOX
	MH	MANHOLE (MH)
	MM	MILE MARKER
	PM	PARKING METER
	PMK	PROJECT MARKER
	POST	POST STONE/WOOD
	RRSIG	RAILROAD SIGNAL
	RRSL	RAILROAD SWITCH LEVER
	S	TREE SOFTWOOD
	SAT	SATELLITE DISH
	SHRUB	SHRUB
	SIGN	SIGN
	STUMP	STUMP
	TEL	TELEPHONE POLE
	TIE	TIE
	TSIGN	SIGN W/DOUBLE POST
	VCTRL	CONTROL VERTICAL
	WELL	WELL
	WSO	WATER SHUT OFF

THESE ARE COMMON VAOT SURVEY POINT SYMBOLS FOR EXISTING FEATURES, ALSO USED FOR PROPOSED FEATURES WITH HEAVIER LINEWEIGHT, IN COMBINATION WITH PROPOSED ANNOTATION.

PROPOSED GEOMETRY CODES

CODE	DESCRIPTION
PC	POINT OF CURVATURE
PI	POINT OF INTERSECTION
CC	CENTER OF CURVE
PT	POINT OF TANGENCY
PCC	POINT OF COMPOUND CURVE
PRC	POINT OF REVERSE CURVE
POB	POINT OF BEGINNING
POE	POINT OF ENDING
STA	STATION PREFIX
AH	AHEAD STATION SUFFIX
BK	BACK STATION SUFFIX
D	CURVE DEGREE OF (100FT)
R	CURVE RADUIS OF
T	CURVE TANGENT LENGTH
L	CURVE LENGTH OF
E	CURVE EXTERNAL DISTANCE

UTILITY SYMBOLOGY

UNDERGROUND UTILITIES

- UT — TELEPHONE
- UE — ELECTRIC
- UC — CABLE (TV)
- UEC — ELECTRIC+CABLE
- UET — ELECTRIC+TELEPHONE
- UCT — CABLE+TELEPHONE
- UECT — ELECTRIC+CABLE+TELEP.
- G — GAS LINE
- W — WATER LINE
- S — SANITARY SEWER (SEPTIC)

ABOVE GROUND UTILITIES (AERIAL)

- T — TELEPHONE
- E — ELECTRIC
- C — CABLE (TV)
- EC — ELECTRIC+CABLE
- ET — ELECTRIC+TELEPHONE
- AER E&T — ELECTRIC+TELEPHONE
- CT — CABLE+TELEPHONE
- ECT — ELECTRIC+CABLE+TELEP.
- UTILITY POLE GUY WIRE

PROJECT CONSTRUCTION SYMBOLOGY

PROJECT DESIGN & LAYOUT SYMBOLOGY

- CZ — CLEAR ZONE
- PLAN LAYOUT MATCHLINE

PROJECT CONSTRUCTION FEATURES

- TOP OF CUT SLOPE
- TOE OF FILL SLOPE
- STONE FILL
- BOTTOM OF DITCH ℄
- CULVERT PROPOSED
- STRUCTURE SUBSURFACE
- PDF — PDF — PROJECT DEMARCATION FENCE
- BF — BF — BARRIER FENCE
- TREE PROTECTION ZONE (TPZ)
- STRIPING LINE REMOVAL
- SHEET PILES

CONVENTIONAL BOUNDARY SYMBOLOGY

BOUNDARY LINES

- TOWN LINE — TOWN BOUNDARY LINE
- COUNTY LINE — COUNTY BOUNDARY LINE
- STATE LINE — STATE BOUNDARY LINE
- PROPOSED STATE R.O.W. (LIMITED ACCESS)
- PROPOSED STATE R.O.W.
- STATE ROW (LIMITED ACCESS)
- STATE ROW
- TOWN ROW
- PERMANENT EASEMENT LINE (P)
- TEMPORARY EASEMENT LINE (T)
- SURVEY LINE
- P/L — PROPERTY LINE (P/L)
- SR SR SR — SLOPE RIGHTS
- 6F — 6F — 6F PROPERTY BOUNDARY
- 4F — 4F — 4F PROPERTY BOUNDARY
- HAZ — HAZ — HAZARDOUS WASTE

EPSC LAYOUT PLAN SYMBOLOGY

EPSC MEASURES

- FILTER CURTAIN
- SILT FENCE
- SILT FENCE WOVEN WIRE
- CHECK DAM
- DISTURBED AREAS REQUIRING RE-VEGETATION
- EROSION MATTING

ENVIRONMENTAL RESOURCES

- WETLAND BOUNDARY
- RIPARIAN BUFFER ZONE
- WETLAND BUFFER ZONE
- SOIL TYPE BOUNDARY
- T&E — THREATENED & ENDANGERED SPECIES
- HAZ — HAZ — HAZARDOUS WASTE AREA
- AG — AGRICULTURAL LAND
- HABITAT — FISH & WILDLIFE HABITAT
- FLOOD PLAIN — FLOOD PLAIN
- OHW — ORDINARY HIGH WATER (OHW)
- STORM WATER
- USDA FOREST SERVICE LANDS
- WILDLIFE HABITAT SUIT/CONN

ARCHEOLOGICAL & HISTORIC

- ARCH — ARCHEOLOGICAL BOUNDARY
- HISTORIC DIST — HISTORIC DISTRICT BOUNDARY
- HISTORIC — HISTORIC AREA
- (H) HISTORIC STRUCTURE

CONVENTIONAL TOPOGRAPHIC SYMBOLOGY

EXISTING FEATURES

- ROAD EDGE PAVEMENT
- ROAD EDGE GRAVEL
- DRIVEWAY EDGE
- DITCH
- FOUNDATION
- FENCE (EXISTING)
- FENCE WOOD POST
- FENCE STEEL POST
- GARDEN
- ROAD GUARDRAIL
- RAILROAD TRACKS
- CULVERT (EXISTING)
- STONE WALL
- WALL
- WOOD LINE
- BRUSH LINE
- HEDGE
- BODY OF WATER EDGE
- LEDGE EXPOSED

Stantec

PROJECT NAME: CORINTH
PROJECT NUMBER: BRO 1447(29)

FILE NAME: z011292_legend.dgn
PROJECT LEADER: G. BOGUE
DESIGNED BY: VTRANS
CONVENTIONAL SYMBOLOGY LEGEND

PLOT DATE: 8/4/2014
DRAWN BY: VTRANS
CHECKED BY: VTRANS
SHEET 9 OF 57

GPS/NGS CONTROL POINTS

TRAVERSE TIES

HVCTRL #1 5/8" REBAR W/VSE CAP

NORTH = 570700.96
EAST = 1713106.10
ELEV. = 711.40

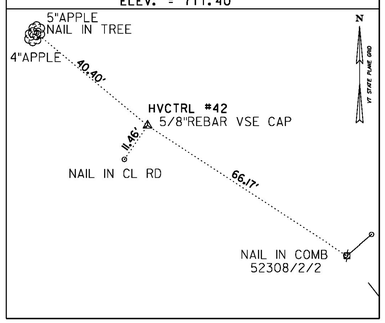

HVCTRL #2 5/8" REBAR W/VSE CAP

NORTH = 570210.13
EAST = 1713235.15
ELEV. = 704.66

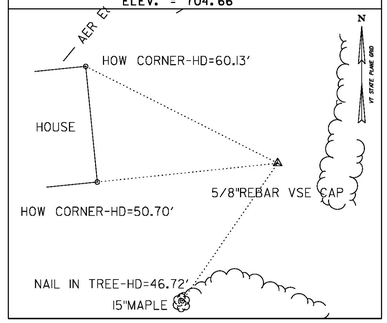

BASELINE TIES

POB STA. 100+00.00

NORTH = 570485.95
EAST = 1713212.90

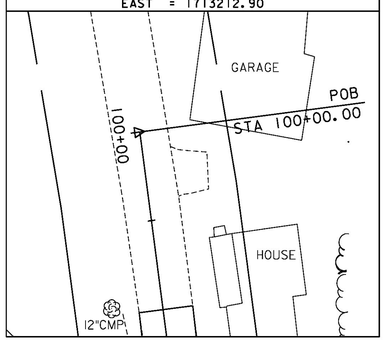

POT STA. 103+73.09

NORTH = 570201.04
EAST = 1713405.04

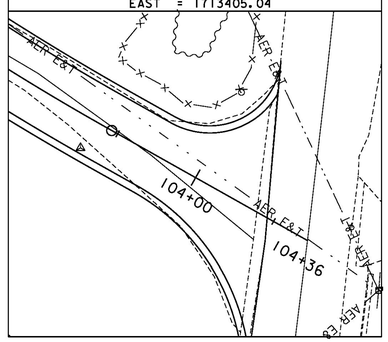

POB STA. 9+47.93

NORTH = 570537.36
EAST = 1713204.66

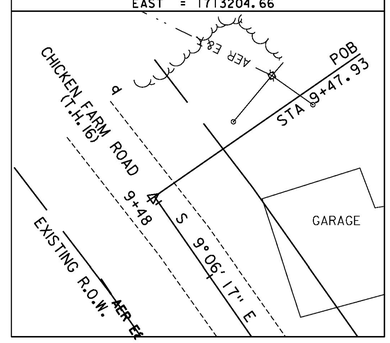

NORTH =
EAST =

NORTH =
EAST =

DATUM
VERTICAL NAVD 88 FT
HORIZONTAL NAD 83(2011) sFT
ADJUSTMENT LSQ

8/4/2014 12:35:06 PM V:\1953\active\195310795\transportation\drawing\z01j292_tie.dgn

PROJECT NAME: CORINTH
PROJECT NUMBER: BRO 1447(29)

FILE NAME: ...\drawing\z01j292_tie.dgn
PROJECT LEADER: G. BOGUE
DESIGNED BY: M. CHENETTE
TIE SHEET

PLOT DATE: 8/4/2014
DRAWN BY: E. ALLING
CHECKED BY: G. BOGUE
SHEET 10 OF 57

Stantec

ITEM 621.72 - GUARDRAIL APPROACH SECTION, GALVANIZED 2 RAIL BOX BEAM (COATED BLACK)

STA. 101+63.5 - 101+97.5, LT.
STA. 101+88.4 - 102+11.3, RT.
STA. 102+62.7 - 102+96.7, LT.
STA. 102+76.5 - 103+10.5, RT.

ITEM 621.30 - BOX BEAM GUARDRAIL (COATED BLACK)

STA. 100+87.9 - 101+63.5, LT.
STA. 101+87.3 - 101+88.4, RT.
STA. 102+96.7 - 103+54.3, LT.
STA. 103+10.5 - 103+14.1, RT.

ITEM 616.21 - VERTICAL GRANITE CURB

STA. 100+90.0 - ~~102+04.4~~ 101+97.5, LT.
STA. ~~102+69.5~~ 102+62.6 - 102+98.8, LT.

DRIVES

STA. 101+87.6, RT. (GRAVEL)

ITEM 201.15 - REMOVING MEDIUM TREES

STA. 101+41.6, LT.

ITEM 620.55 - REMOVAL OF EXISTING FENCE

STA. 102+88.5 - 103+28.8, LT.

ITEM 621.80 - REMOVAL AND DISPOSAL OF GUARDRAIL

STA. 101+99.6 - 102+21.4, LT.
STA. 102+11.3 - 102+25.6, RT.
STA. 102+62.1 - 102+81.0, LT.
STA. 102+66.1 - 102+93.8, RT.

ITEM 613.12 - STONE FILL, TYPE III

STA. 102+23 - 102+38, RT.
STA. 102+79 - 102+69, LT

ITEM 617.10 - RELOCATE MAILBOX, SINGLE SUPPORT

STA. 101+69.8, RT.

(103) STA. 102+79 LT TO STA. 102+91 LT

(100) STA. 101+67 RT TO STA. 102+23 RT
NEW 18" X 64', PIPE OPTION 1
WITH DI @ INLET AND ES @ OUTLET

(101) STA. 101+56 LT TO STA. 101+67 RT
NEW 18" X 28', PIPE OPTION 1
WITH DI @ INLET AND OUTLET

(102) STA. 100+90 RT TO STA. 101+67 RT
NEW 18" X 80', PIPE OPTION 1
WITH DI @ INLET AND OUTLET

PIPE OPTION 1 = PCCSP, CAAP, RCP OR CPEP(SL)

CHICKEN FARM ROAD (T.H. 16) CURVE DATA

CURVE (1)	CURVE (2)
Δ = 48°45'20"	Δ = 7°11'44"
D = 76°23'40"	D = 7°38'22"
R = 75.00'	R = 750.00'
T = 33.99'	T = 47.16'
L = 63.82'	L = 94.19'
E = 7.34'	E = 1.48'

VT STATE PLANE GRID

NOTES:

1. MAILBOX TO BE RELOCATED DURING TEMPORARY DETOUR PHASE OF CONSTRUCTION (SEE TRAFFIC CONTROL SHEET TCS 1 FOR ORIGINAL LOCATION). MAILBOX TO BE MOVED TO FINAL LOCATION SHOWN ON THIS SHEET IMMEDIATELY AFTER THE TEMPORARY DETOUR IS CLOSED AND T.H. 16 IS REOPENED TO TRAFFIC.
2. EXISTING WOODEN FENCES SHALL BE REMOVED AND RETURNED TO LAND OWNERS AS DIRECTED BY THE ENGINEER.

SCALE: 1" = 20'-0"

FOR EXISTING BRIDGE INFORMATION, SEE PRELIMINARY INFORMATION SHEET

PROJECT NAME:	CORINTH
PROJECT NUMBER:	BRO 1447(29)
FILE NAME: ...\drawing\z0112 92_bdr.dgn	PLOT DATE: 8/4/2014
PROJECT LEADER: G. BOGUE	DRAWN BY: E. ALLING
DESIGNED BY: M. CHENETTE	CHECKED BY: G. BOGUE
PLAN LAYOUT SHEET - PL 1	SHEET 11 OF 57

Stantec

8/4/2014 12:13:07 PM V:\1953\active\195301795\transportation\drawing\z0112 92_bdr.dgn

STATE OF VERMONT
AGENCY OF TRANSPORTATION

DRAINAGE DETAIL SHEET

STATION	STATION	POS.	ASKEW	INLET/OUTLET TYPE		DITCH		PIPE ARCH			PIPE		ALLOWABLE OPTIONS						PIPE ELBOW	ES	CB	PRCDI	DEPTH DI	CONC CLASS B	REINF STEEL	DI GRATE	CHAN ELEV	CRM	TRENCH EXCAVATION		COMM EXC	UNC CHAN EXC	STRUCT EXCAV	GRAN BKFILL STRUCT	GRAN BORR	EROS MATT	STONE FILL		MARKER POSTS				REMARKS
				INLET	OUTLET	IN	OUT	SPAN	RISE	L	D	L	PCCSP	CAAP	RCP	CSP	CPEP	PCCSP PI										EARTH	ROCK									LT	RT			
			NO. DEG.					IN	IN	FT	IN	FT	TH	TH	CL	TH	SL	TH	NO. DEG.	EA	EA		FT	CY	LBS	TYPE	EA	CY	CY	CY	CY	CY	CY	CY	SY	CY	TYPE	EA	EA			
101+67	102+23	RT		DI	ES						18	64	X	X	III		X			1		1	8.8			A			105								10	III					DI @ INLET (2' SUMP); ES @ OUTLET
101+56	101+67	LT-RT		DI	DI						18	28	X	X	III		X					1	8.2			D			30													DI @ INLET (2' SUMP); DI @ OUTLET (2' SUMP); USE ECCENTRIC CONE AT 10+56 TO AVOID GR POSTS
100+90	101+67	RT		DI	DI						18	80	X	X	III		X					1	8.2			A			85													DI @ INLET (2' SUMP); DI @ OUTLET (2' SUMP)

Stantec

PROJECT NAME: CORINTH
PROJECT NUMBER: BRO 1447(29)

FILE NAME: ...\drawing\z01j292_frm.dgn
PROJECT LEADER: G. BOGUE
DESIGNED BY: M. CHENETTE
DRAINAGE DETAIL SHEET – DDS 1

PLOT DATE: 8/4/2014
DRAWN BY: E. ALLING
CHECKED BY: G. BOGUE
SHEET 12 OF 57

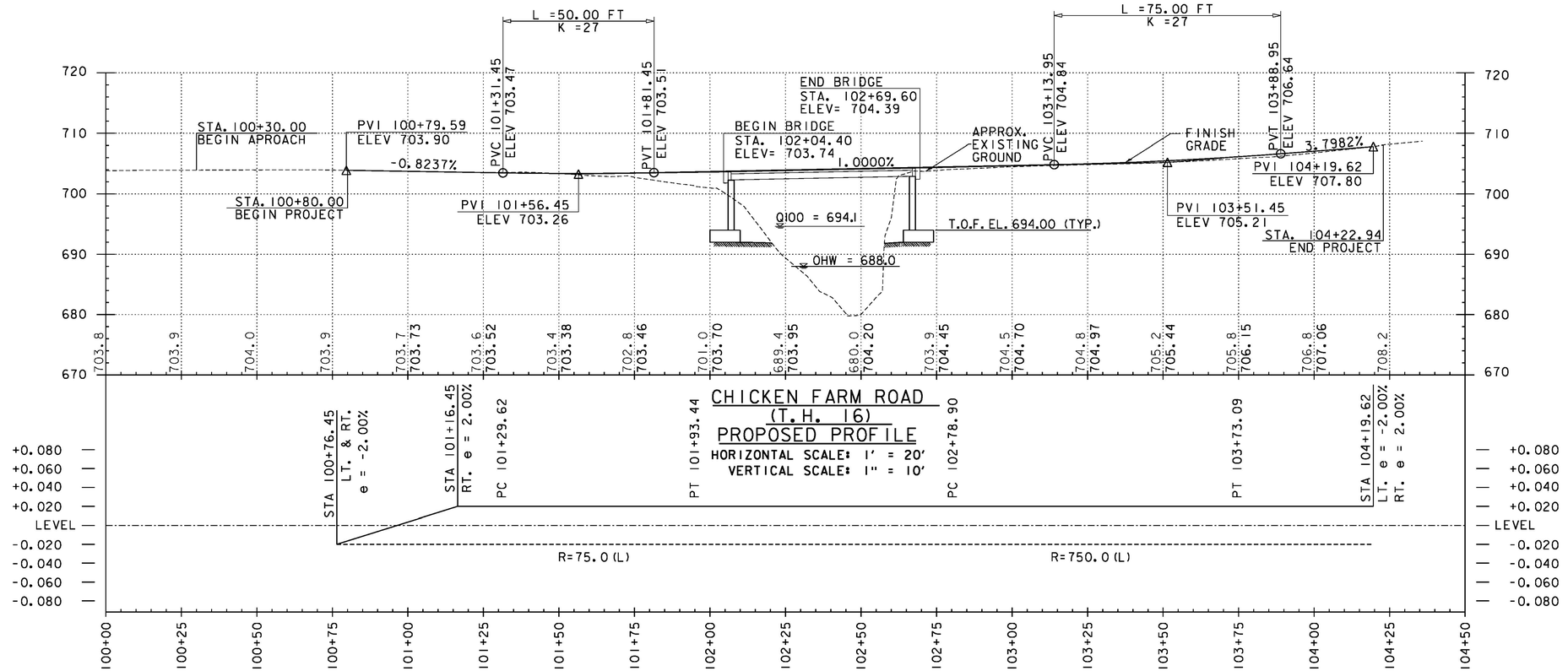

BANKING DIAGRAM

HORIZONTAL SCALE: 1' = 20'

NOTE:

ELEVATIONS SHOWN TO THE NEAREST TENTHS ARE EXISTING GROUND ALONG PROPOSED CENTERLINE.

ELEVATIONS SHOW TO THE NEAREST HUNDREDTHS ARE FINISHED GRADE ALONG PROPOSED CENTERLINE.

Stantec

PROJECT NAME:	CORINTH
PROJECT NUMBER:	BRO 1447(29)
FILE NAME: ...\drawing\z01j292_xs.dgn	PLOT DATE: 8/4/2014
PROJECT LEADER: G. BOGUE	DRAWN BY: E. ALLING
DESIGNED BY: M. CHENETTE	CHECKED BY: G. BOGUE
PROFILE SHEET – PRO 1	SHEET 13 OF 57

8/4/2014 12:13:26 PM V:\1953\active\195301795\transportation\drawing\z01j292_xs.dgn

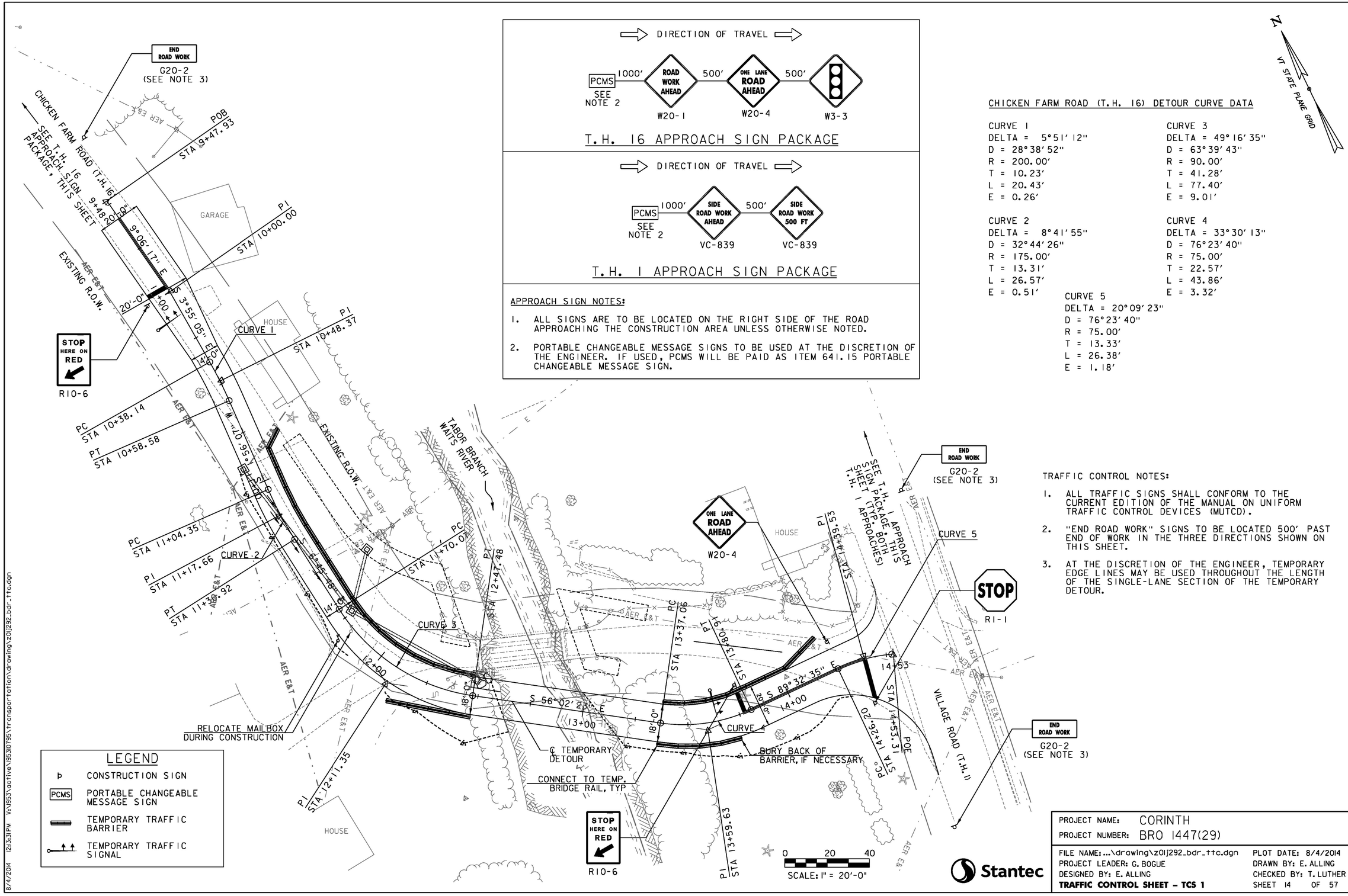

DIRECTION OF TRAVEL

T.H. 16 APPROACH SIGN PACKAGE

DIRECTION OF TRAVEL

T.H. 1 APPROACH SIGN PACKAGE

APPROACH SIGN NOTES:

1. ALL SIGNS ARE TO BE LOCATED ON THE RIGHT SIDE OF THE ROAD APPROACHING THE CONSTRUCTION AREA UNLESS OTHERWISE NOTED.
2. PORTABLE CHANGEABLE MESSAGE SIGNS TO BE USED AT THE DISCRETION OF THE ENGINEER. IF USED, PCMS WILL BE PAID AS ITEM 641.15 PORTABLE CHANGEABLE MESSAGE SIGN.

N

VT STATE PLANE GRID

CHICKEN FARM ROAD (T.H. 16) DETOUR CURVE DATA

CURVE 1	CURVE 3
DELTA = 5°51'12"	DELTA = 49°16'35"
D = 28°38'52"	D = 63°39'43"
R = 200.00'	R = 90.00'
T = 10.23'	T = 41.28'
L = 20.43'	L = 77.40'
E = 0.26'	E = 9.01'
CURVE 2	**CURVE 4**
DELTA = 8°41'55"	DELTA = 33°30'13"
D = 32°44'26"	D = 76°23'40"
R = 175.00'	R = 75.00'
T = 13.31'	T = 22.57'
L = 26.57'	L = 43.86'
E = 0.51'	E = 3.32'

CURVE 5
DELTA = 20°09'23"
D = 76°23'40"
R = 75.00'
T = 13.33'
L = 26.38'
E = 1.18'

TRAFFIC CONTROL NOTES:

1. ALL TRAFFIC SIGNS SHALL CONFORM TO THE CURRENT EDITION OF THE MANUAL ON UNIFORM TRAFFIC CONTROL DEVICES (MUTCD).
2. "END ROAD WORK" SIGNS TO BE LOCATED 500' PAST END OF WORK IN THE THREE DIRECTIONS SHOWN ON THIS SHEET.
3. AT THE DISCRETION OF THE ENGINEER, TEMPORARY EDGE LINES MAY BE USED THROUGHOUT THE LENGTH OF THE SINGLE-LANE SECTION OF THE TEMPORARY DETOUR.

LEGEND

- CONSTRUCTION SIGN
- PCMS — PORTABLE CHANGEABLE MESSAGE SIGN
- TEMPORARY TRAFFIC BARRIER
- TEMPORARY TRAFFIC SIGNAL

Stantec

PROJECT NAME:	CORINTH
PROJECT NUMBER:	BRO 1447(29)
FILE NAME: ...\drawing\z01j292_bdr_ttc.dgn	PLOT DATE: 8/4/2014
PROJECT LEADER: G. BOGUE	DRAWN BY: E. ALLING
DESIGNED BY: E. ALLING	CHECKED BY: T. LUTHER
TRAFFIC CONTROL SHEET - TCS 1	SHEET 14 OF 57

8/4/2014 12:53:31 PM V:\1953\active\195310795\transportation\drawing\z01j292_bdr_ttc.dgn

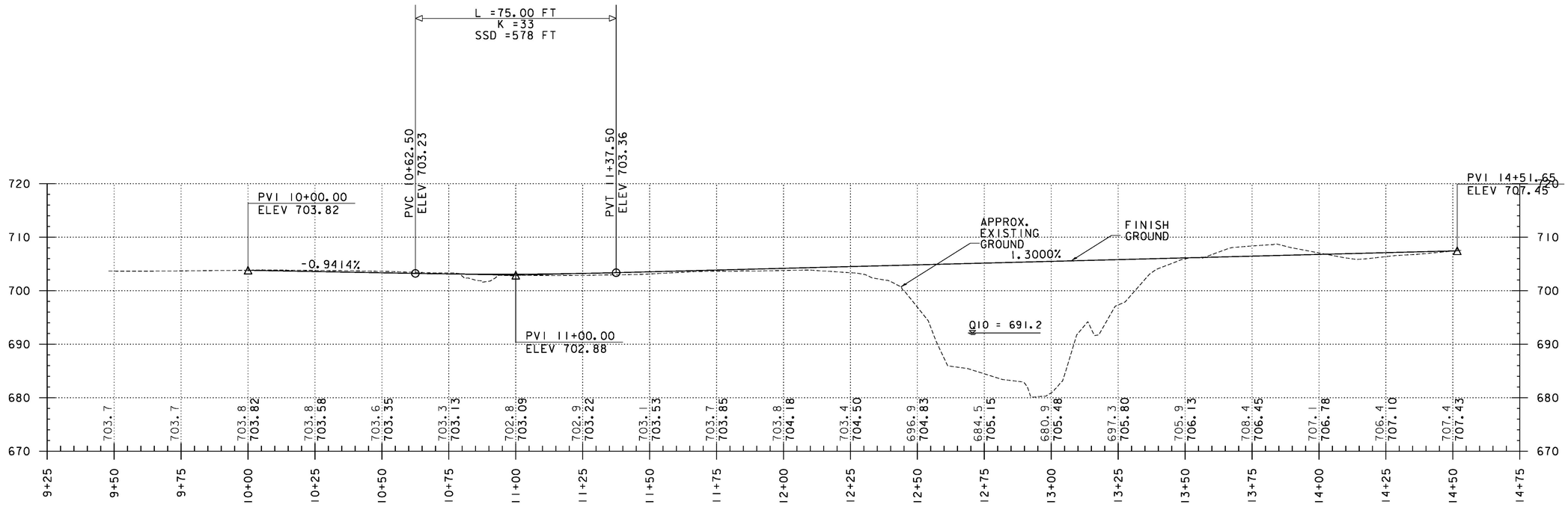

TEMPORARY DETOUR PROPOSED PROFILE

HORIZONTAL SCALE: 1' = 20' VERTICAL SCALE: 1" = 10'

NOTE:

ELEVATIONS SHOWN TO THE NEAREST TENTHS ARE EXISTING GROUND ALONG PROPOSED CENTERLINE.

ELEVATIONS SHOW TO THE NEAREST HUNDREDTHS ARE FINISHED GRADE ALONG PROPOSED CENTERLINE.

Stantec

PROJECT NAME: CORINTH	
PROJECT NUMBER: BRO 1447(29)	
FILE NAME: ...\drawing\z01j292_xs.dgn	PLOT DATE: 8/4/2014
PROJECT LEADER: G. BOGUE	DRAWN BY: T. LUTHER
DESIGNED BY: E. ALLING	CHECKED BY: G. BOGUE
DETOUR PROFILE SHEET - TPS 1	SHEET 15 OF 57

8/4/2014 12:32 PM V:\1953\active\195301795\transportation\drawing\z01j292_xs.dgn

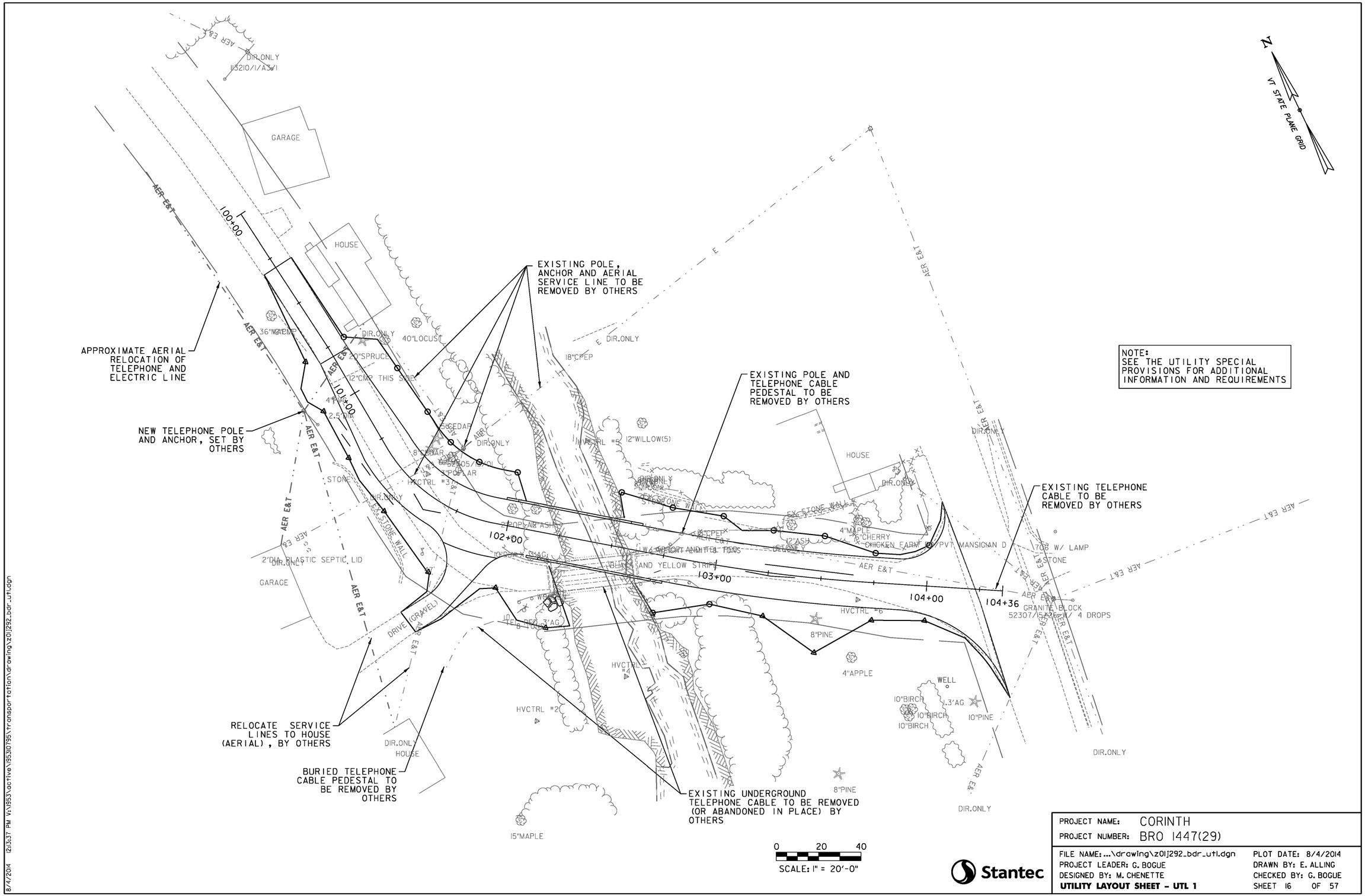

NOTE:
SEE THE UTILITY SPECIAL PROVISIONS FOR ADDITIONAL INFORMATION AND REQUIREMENTS

Stantec

PROJECT NAME: CORINTH	
PROJECT NUMBER: BRO 1447(29)	
FILE NAME: ...\drawing\z01j292_bdr_utl.dgn	PLOT DATE: 8/4/2014
PROJECT LEADER: G. BOGUE	DRAWN BY: E. ALLING
DESIGNED BY: M. CHENETTE	CHECKED BY: G. BOGUE
UTILITY LAYOUT SHEET - UTL 1	SHEET 16 OF 57

8/4/2014 12:13:37 PM V:\1953\active\195310795\transportation\drawing\z01j292_bdr_utl.dgn

ITEM 646.26 - 24 INCH STOP BAR

STA. 104+14, RT.

ITEM 646.21 - 4 INCH YELLOW LINE

STA. 103+60 - 104+25 (DOUBLE YELLOW CENTERLINE)

ITEM 675.50 - REMOVING SIGNS

AS SHOWN - (8)

ITEM 646.30 - LETTER OR SYMBOL

STA. 104+05, RT. - "STOP"

STA. ~~101+25~~ 99+05, LT.

STA. 101+71, RT.

STA. 102+14, RT.

STA. 102+71, LT.

STA. 102+72, LT.

STA. 102+87, LT.

STA. 103+00, LT.

STA. 103+75, LT.

SEE NOTE 5

STA. 104+00, LT.

STA. 104+25, RT.

STA. 100+40, RT.

STA. 101+40, RT.

STA. 102+05, RT.

STA. 102+15, RT.

STA. 102+73, RT.

SIGN NOTES:

1. ALL SIGN LETTERING, DIGITS, ARROWS, AND DESIGN OF SYMBOLS FOR SIGNS REFERENCED IN THESE PLANS SHALL CONFORM WITH THE "STANDARD ALPHABET FOR HIGHWAY SIGNS AND PAVEMENT MARKINGS" AS ADOPTED BY THE U.S. DEPARTMENT OF TRANSPORTATION AND THE FEDERAL HIGHWAY ADMINISTRATION (FHWA) UNLESS DETAILED WITHIN THESE PLANS.
2. ALL COLORS SHALL CONFORM WITH THE STANDARD COLORS ADOPTED BY THE AMERICAN ASSOCIATION OF STATE HIGHWAY AND TRANSPORTATION OFFICIALS (AASHTO) AND APPROVED BY FHWA UNLESS OTHERWISE NOTED.
3. ALL SHEETING SHALL BE MINIMUM ASTM D 4956 TYPE III.
4. ALL STREET SIGNS ARE TWO-SIDED UNLESS NOTED OTHERWISE.
5. CONTRACTOR TO RETURN PRIVATE ROAD SIGN TO TOWN.

SIGN LEGEND

N	= NEW
R	= REMOVE
R&S	= REMOVE & SALVAGE
S	= SALVAGE SIGN
RET	= RETAIN
B-B	= BACK TO BACK

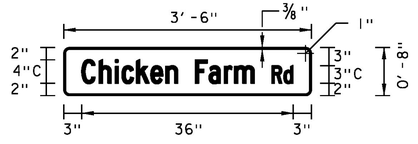

LOCATION: STA. 104+25, RT.

COLOR: WHITE BORDER AND TEXT (RETROREFLECTIVE) GREEN BACKGROUND (RETROREFLECTIVE)

MATERIAL: 0.100" THICKNESS

SCALE: 1" = 20'-0"

PROJECT NAME:	CORINTH
PROJECT NUMBER:	BRO 1447(29)
FILE NAME: ...\drawing\z0lj292_bdr_spm.dgn	PLOT DATE: 8/4/2014
PROJECT LEADER: G. BOGUE	DRAWN BY: E. ALLING
DESIGNED BY: E. ALLING	CHECKED BY: T. LUTHER
TRAFFIC SIGNS AND LINES LAYOUT - TSL 1	SHEET 17 OF 57

Stantec

8/4/2014 12:13:42 PM V:\1953\active\195310795\transportation\drawing\z0lj292_bdr_spm.dgn

STATE OF VERMONT
AGENCY OF TRANSPORTATION

TRAFFIC SIGN SUMMARY SHEET

MILEMARKER, STATION, OR SIGN NUMBER	SIGN LEGEND	SIGN DIMENSIONS EA	SIGN DIMENSIONS WIDTH (in)	SIGN DIMENSIONS HEIGHT (in)	NEW & SALVAGED SIGNS "A"	NEW & SALVAGED SIGNS "B"	NEW & SALVAGED SIGNS SALV SIGN	NEW & SALVAGED SIGNS SALV TIS	EXIST POST RETAIN	EXIST POST SALVAGE	NO. OF POSTS	FLANGED CHANNEL lb/ft 1.12	FLANGED CHANNEL lb/ft 2.0	FLANGED CHANNEL lb/ft 3.0	SQUARE STEEL (in) 1.75 lb/ft 1.88	SQUARE STEEL (in) 2.0 lb/ft 2.42	SQUARE STEEL (in) 2.5 lb/ft 3.35	ANCHOR	SLEEVE	TUBULAR ALUMINUM Ø (in) 3.0 lb/ft 1.3	TUBULAR ALUMINUM Ø (in) 4.0 lb/ft 1.7	TUBULAR ALUMINUM Ø (in) 4.0 MOD lb/ft 1.7	FOUNDATION	TUBULAR STEEL Ø (in) 3.0 lb/ft 7.6	TUBULAR STEEL Ø (in) 3.5 lb/ft 9.0	TUBULAR STEEL Ø (in) 4.0 lb/ft 10.8	TUBULAR STEEL Ø (in) 5.0 lb/ft 14.6	W-SHAPE STEEL FTG. SIZE 24"	W-SHAPE STEEL FTG. SIZE 30"	W-SHAPE STEEL WEIGHT	W-SHAPE STEEL POST SIZE	SIGN FRAME REQUIRED	REMARKS	SIGN DETAIL DETAIL IN SHSM BOOK	SIGN DETAIL DETAIL ON SHEET NUMBER	SIGN DETAIL STD. SHEET NUMBER
CHICKEN FARM ROAD T.H. 16																																				
100+40, RT		1	30	30	6.25						1					X		X															W1-1	X		
		1	18	18	2.25																												W13-1P	X		
101+25, LT		1	24	30	5						1					X		X															R2-1	X		
101+40, RT		1	48	24	8						2					X		X															W1-6	X		
101+71, RT		1	48	24	8						2					X		X															W1-6	X		
102+05, RT		1	6	8	0.33						1				X			X															VD-701			T-42
102+71, LT		1	6	8	0.33						1				X			X															VD-701			T-42
103+00, LT		1	30	30	6.25						1						X	X															W14-2	X		
103+75, LT		1	30	30	6.25						1					X		X															W1-1	X		
		1	18	18	2.25																												W13-1P	X		
104+25, RT		1	42	8	2.33						1						X	X															D3-1	X	TSL 1	
		1	30	30	6.25																												R1-1	X		
												FT	FT	FT	FT 15.0	FT 95.5	FT 28.8		EA	LB	LB	LB		LB	LB	LB	LB									
												FT			FT 139.3					LB			EA.	LB				EA.	EA.	LB						
	TOTALS				SF 53.49	SF	EA.	SF																												

"SHSM"-STANDARD HIGHWAY SIGNS AND MARKINGS

FINAL POST LENGTHS ARE TO BE DETERMINED IN THE FIELD. POST SIZES ARE COMPUTED BASED ON INFORMATION FURNISHED ON THE STANDARD SHEETS AND THE VTRANS "SIGN POST DESIGN GUIDELINE."

TRAFFIC SIGN SUMMARY SHEET

PROJECT NAME: CORINTH
PROJECT NUMBER: BRO 1447(29)

FILE NAME: ...\drawing\z01j292_tss.dgn
PROJECT LEADER: G. BOGUE
DESIGNED BY: D. GROVER
TRAFFIC SIGN SUMMARY SHEET - TSS 1

PLOT DATE: 8/4/2014
DRAWN BY: D. GROVER
CHECKED BY: T. LUTHER
SHEET 18 OF 57

SOIL CLASSIFICATION

AASHTO	
A1	Gravel and Sand
A3	Fine Sand
A2	Silty or Clayey Gravel and Sand
A4	Silty Soil - Low Compressibility
A5	Silty Soil - Highly Compressible
A6	Clayey Soil - Low Compressibility
A7	Clayey Soil - Highly Compressible

ROCK QUALITY DESIGNATION

R.Q.D. (%)	ROCK DESCRIPTION
<25	Very Poor
25 to 50	Poor
51 to 75	Fair
76 to 90	Good
>90	Excellent

SHEAR STRENGTH

UNDRAINED SHEAR STRENGTH IN P.S.F.	CONSISTENCY
<250	Very Soft
250-500	Soft
500-1000	Med. Stiff
1000-2000	Stiff
2000-4000	Very Stiff
>4000	Hard

CORRELATION GUIDE OF "N" TO DENSITY/CONSISTENCY

DENSITY (GRANULAR SOILS)		CONSISTENCY (COHESIVE SOILS)	
N	DESCRIPTIVE TERM	N	DESCRIPTIVE TERM
<5	Very Loose	<2	Very Soft
5-10	Loose	2-4	Soft
11-24	Med. Dense	5-8	Med. Stiff
25-50	Dense	9-15	Stiff
>50	Very Dense	16-30	Very Stiff
		31-60	Hard
		>60	Very Hard

COMMONLY USED SYMBOLS

▼	Water Elevation
⊕	Standard Penetration Boring
⊕	Auger Boring
⊙	Rod Sounding
S	Sample
N	Standard Penetration Test Blow Count Per Foot For: 2" O.D. Sampler 1 3/8" I.D. Sampler Hammer Weight Of 140 Lbs. Hammer Fall Of 30"
VS	Field Vane Shear Test
US	Undisturbed Soil Sample
B	Blast
DC	Diamond Core
MD	Mud Drill
WA	Wash Ahead
HSA	Hollow Stem Auger
AX	Core Size 1 1/8"
BX	Core Size 1 5/8"
NX	Core Size 2 1/8"
M	Double Tube Core Barrel Used
LL	Liquid Limit
PL	Plastic Limit
PI	Plasticity Index
NP	Non Plastic
w	Moisture Content (Dry Wgt. Basis)
D	Dry
M	Moist
MTW	Moist To Wet
W	Wet
Sat	Saturated
Bo	Boulder
Gr	Gravel
Sa	Sand
Si	Silt
Cl	Clay
HP	Hardpan
Le	Ledge
NLTD	No Ledge To Depth
CNPF	Can Not Penetrate Further
TLOB	Top of Ledge Or Boulder
NR	No Recovery
Rec.	Recovery
%Rec.	Percent Recovery
RQD	Rock Quality Designation
CBR	California Bearing Ratio
<	Less Than
>	Greater Than
R	Refusal (N > 100)
VTSPG	NAD83 - See Note 7

COLOR

blk	Black	pnk	Pink
bl	Blue	pu	Purple
brn	Brown	rd	Red
dk	Dark	tn	Tan
gry	Gray	wh	White
gn	Green	yel	Yellow
lt	Light	mltc	Multicolored
or	Orange		

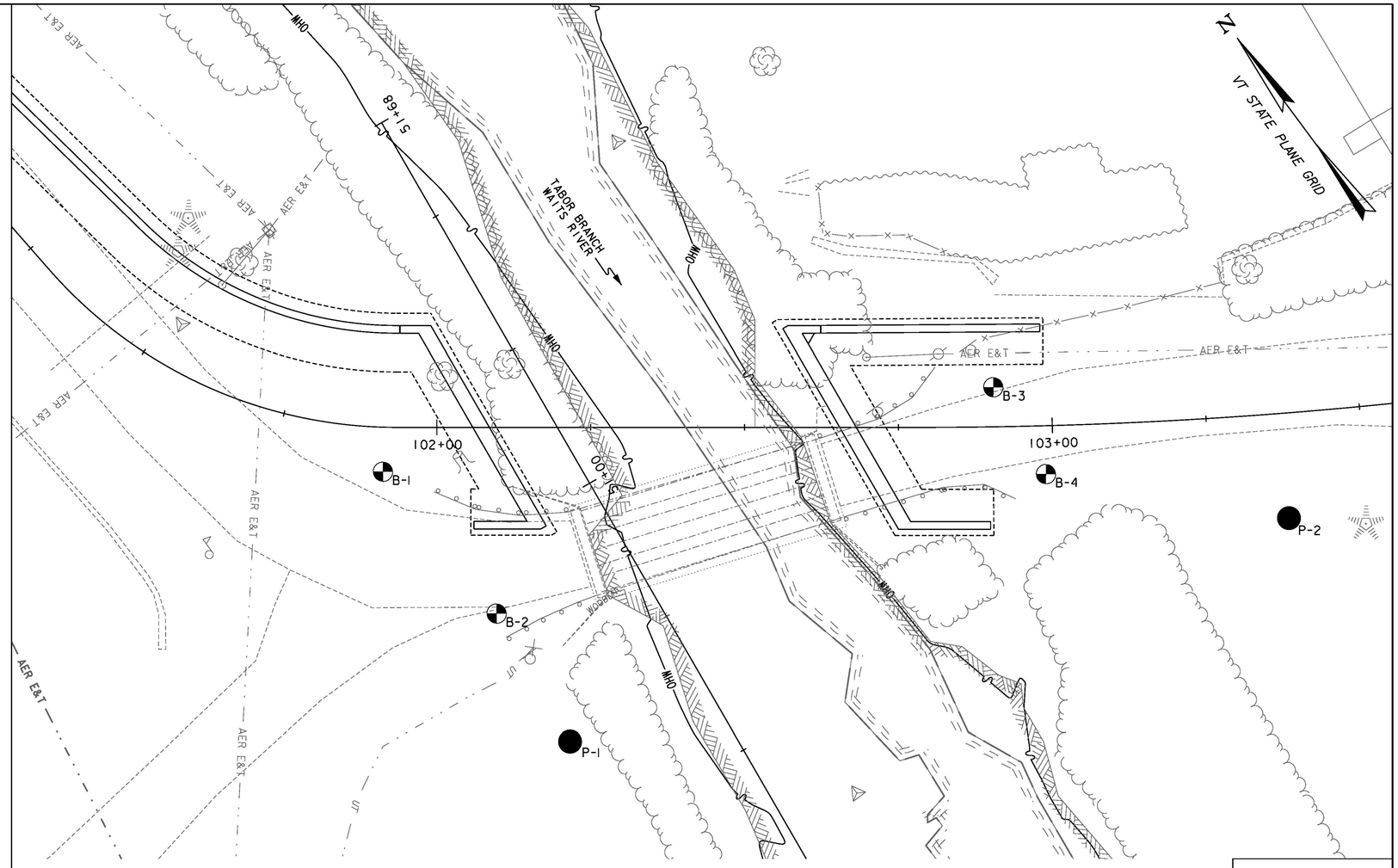

BORING LAYOUT
SCALE: 1" = 10'-0"
0 10 20

LEGEND:
- BRIDGE BORING
- PROBE

BORING CHART

BORING NUMBER	SURVEY STATION	OFFSET	GROUND ELEVATION
B-1	101+91.42	7.21' RT	702.7
B-2	102+09.71	30.25' RT	703.0
B-3	102+90.38	6.46' LT	704.2
B-4	102+98.75	7.83' RT	704.1
P-1	102+21.64	51.00' RT	702.0
P-2	103+37.46	17.00' RT	707.3

DEFINITIONS (AASHTO)

BEDROCK (LEDGE) - Rock in its native location of indefinite thickness.

BOULDER - A rock fragment with an average dimension > 12 inches.

COBBLE - Rock fragments with an average dimension between 3 and 12 inches.

GRAVEL - Rounded particles of rock < 3" and > 0.0787" (#10 sieve).

SAND - Particles of rock < 0.0787" (#10 sieve) and > 0.0029" (#200 sieve).

SILT - Soil < 0.0029" (#200 sieve), non or slightly plastic and exhibits no strength when air-dried.

CLAY - Fine grained soil, exhibits plasticity when moist and considerable strength when air-dried.

VARVED - Alternate layers of silt and clay.

HARDPAN - Extremely dense soil, cemented layer, not softened when wet.

MUCK - Soft organic soil (containing > 10% organic material.

MOISTURE CONTENT - Weight of water divided by dry weight of soil.

FLOWING SAND - Granular soil so saturated (loose) that it flows into drill casing during extraction of wash rod.

STRIKE - Angle from magnetic north to line of intersection of bed with a horizontal plane.

DIP - Inclination of bed with a horizontal plane.

GENERAL NOTES

1. The subsurface explorations shown herein were made in February 2013 by New Hampshire Boring.
2. Soil and rock classifications, properties and descriptions are based on engineering interpretation from available subsurface information by Stantec and may not necessarily reflect actual variations in subsurface conditions that may be encountered between individual boring or sample locations.
3. Observed water levels and/or conditions indicated are as recorded at the time of exploration and may vary according to the prevailing rainfall, methods of exploration and other factors.
4. Engineering judgment was exercised in preparing the subsurface information presented herein. Analysis and interpretation of subsurface data was performed and interpreted for Stantec design and estimating purposes. Presentation of the information in the Contract is intended to provide the Contractor access to the same data available to the Agency. The subsurface information is presented in good faith and is not intended as a substitute for personal investigation, independent interpretation, independent analysis or judgment by the Contractor.
5. Pictorial structure details shown on the boring plan layout or soils profile are for illustrative purposes only and may not accurately portray final contract details.
6. Terminology used on boring logs to describe the hardness, degree of weathering, and spacing of fractures, joints and other discontinuities in the bedrock is defined in the AASHTO Manual on Subsurface Investigations, 1988.
7. Northing and Easting coordinates are shown in Vermont State Plane Grid North American Datum 1983 in meters and survey feet.

Stantec

PROJECT NAME: CORINTH
PROJECT NUMBER: BRO 1447(29)

FILE NAME: ...\z0112292_bdr_bor layout.dgn
PROJECT LEADER: G. BOGUE
DESIGNED BY: M. CHENETTE
BORING INFORMATION SHEET
PLOT DATE: 8/4/2014
DRAWN BY: E. ALLING
CHECKED BY: G. BOGUE
SHEET 19 OF 57

8/4/2014 12:13:44 PM V:\1953\active\195301795\transportation\drawing\z0112292_bdr_bor layout.dgn

STATE OF VERMONT
AGENCY OF TRANSPORTATION
MATERIALS & RESEARCH SECTION
SUBSURFACE INFORMATION

BORING LOG

CORINTH
BRO 1447(29)
Bridge #36

Boring No.: **B-1**
Page No.: 1 of 1
Pin No.:
Checked By: TAD

Boring Crew: NH Boring, Derry, NH, Burke (Stantec)
Date Started: 2/22/13 Date Finished: 2/22/13
VTSPG NAD83: N 570298.60 ft E 1713251.31 ft
Station: 101+91.41 Offset: 7.21 RT
Ground Elevation: 702.7 ft

	Casing	Sampler
Type:	H.S.A.	SS
I.D.:	4.25 in	1.38 in
Hammer Wt:	N.A.	140
Hammer Fall:	N.A.	30
Hammer/Rod Type:	Safety/N	
Rig:	CME 750 <<SUB>><<SUB>> = 1	

Groundwater Observations

Date	Depth (ft)	Notes

ABUTMENT I
TOP OF FOOTING
EL. 694.00

Depth (ft)	Strata (1)	CLASSIFICATION OF MATERIALS (Description)	Run (Dip deg.)	Core Rec. % (RQD %)	Drill Rate minutes/ft	Blows/6" (N Value)	Moisture Content %	Gravel %	Sand %	Fines %
		Not Sampled, Soil was frozen topsoil								
		Visual Classification, Sa, brn, Moist, Rec. = 0.7 ft				16-9-7-7 (16)				
2.5		Visual Classification, SiSa, brn, Moist, Rec. = 0.7 ft								
		A-2-4, SiSa, brn, Moist, Rec. = 1.0 ft				13-15-13-9 (28)	15.7	9.2	63.8	27.0
5.0		Visual Classification, SiSa, Dk/brn, Moist, Rec. = 1.5 ft				2-2-1-1 (3)				
		A-2-4, SiSa, Dk/brn, Moist, Rec. = 0.5 ft					26.9	6.2	62.8	31.0
7.5		A-8, Peat, organic content = 18.4%, Dk/brn, Moist, Rec. = 0.8 ft				3-4-100/1 (R)	106.4			
		Visual Classification, SiSa, Dk/gry, Moist, Rec. = 0.1 ft				Top of Bedrock @ 8.1 ft				
		Probable weathered rock, 8.1 ft - 8.5 ft	1 (30)	95 (65)	7					
10.0		8.5 ft - 13.5 ft, Gry, Phyllite, Hard, Fresh, Fair rock, NXDC, Joints are low angle, closely spaced, smooth to rough, and tight. RMR = 44			5 6 6 7					
12.5										
		13.5 ft - 18.5 ft, Gry, Phyllite, Hard, Fresh, Fair rock, NXDC, Joints are low angle, close to moderately close spaced, smooth, and tight. RMR = 51	2 (30)	97 (97)	6 6 7 7 5					
15.0										
17.5										
		Hole stopped @ 18.5 ft								

Notes:
1. Stratification lines represent approximate boundary between material types. Transition may be gradual.
<<SUB>><<SUB>> is the hammer energy correction factor.
3. Water level readings have been made at times and under conditions stated. Fluctuations of groundwater may occur due to other factors than those present at the time measurements were made.

STATE OF VERMONT
AGENCY OF TRANSPORTATION
MATERIALS & RESEARCH SECTION
SUBSURFACE INFORMATION

BORING LOG

CORINTH
BRO 1447(29)
Bridge #36

Boring No.: **B-2**
Page No.: 1 of 1
Pin No.:
Checked By: TAD

Boring Crew: NH Boring, Derry, NH, Burke (Stantec)
Date Started: 2/21/13 Date Finished: 2/21/13
VTSPG NAD83: N 570269.09 ft E 1713252.43 ft
Station: 102+09.71 Offset: 30.25 RT
Ground Elevation: 703.0 ft

	Casing	Sampler
Type:	H.S.A.	SS
I.D.:	4.25 in	1.38 in
Hammer Wt:	N.A.	140
Hammer Fall:	N.A.	30
Hammer/Rod Type:	Safety/N	
Rig:	CME 750 <<SUB>><<SUB>> = 1	

Groundwater Observations

Date	Depth (ft)	Notes

ABUTMENT I
TOP OF FOOTING
EL. 694.00

Depth (ft)	Strata (1)	CLASSIFICATION OF MATERIALS (Description)	Blows/6" (N Value)	Moisture Content %	Gravel %	Sand %	Fines %
		Not Sampled, Frozen soil					
		Visual Classification, Sa, gry, Moist, Rec. = 1.7 ft	29-40-53-68 (93)				
2.5		Visual Classification, GrSa, gry, Moist, Rec. = 0.2 ft	29-21-22-24 (43)				
		Visual Classification, Peat, Dk/brn, Moist, Rec. = 0.8 ft					
5.0		Visual Classification, Peat, Dk/brn, Moist, Rec. = 0.2 ft	2-1-1-2 (2)				
7.5		Visual Classification, Peat, Dk/brn, Moist, Rec. = 0.5 ft	2-2-1-2 (3)				
		A-8, Peat, organic content = 8.6%, Dk/brn, Moist, Rec. = 2.0 ft	1-2-1-2 (3)	58.3			
10.0							
12.5		Visual Classification, Peat, Dk/brn, Moist, Rec. = 1.5 ft	3-3-4-8 (7)				
		A-1-b, SiSa, gry, Moist, Rec. = 0.3 ft		27.1	15.0	61.0	24.0
15.0		No Recovery, Rec. = 0.0 ft, 15.0 ft - 15.1 ft	100/1 (R)	Top of Bedrock @ 15.1 ft			
17.5		Hole stopped @ 15.1 ft					

Remarks:
Auger refusal on probable bedrock at 15.1 feet below ground surface.

Notes:
1. Stratification lines represent approximate boundary between material types. Transition may be gradual.
<<SUB>><<SUB>> is the hammer energy correction factor.
3. Water level readings have been made at times and under conditions stated. Fluctuations of groundwater may occur due to other factors than those present at the time measurements were made.

Stantec

PROJECT NAME: CORINTH	
PROJECT NUMBER: BRO 1447(29)	
FILE NAME: ...\drawing\z01j292_bor1.dgn	PLOT DATE: 8/4/2014
PROJECT LEADER: G. BOGUE	DRAWN BY: J. SOTER
DESIGNED BY: M. CHENETTE	CHECKED BY: G. BOGUE
BORING LOG 1	SHEET 20 OF 57

BORING LOG VTRANS_CORINTHVT.GPJ VERMONT AOT.GDT 3/26/13
8/4/2014 12:13:44 PM V:\1953\active\195310795\transportation\drawing\z01j292_bor1.dgn

STATE OF VERMONT
AGENCY OF TRANSPORTATION
MATERIALS & RESEARCH SECTION
SUBSURFACE INFORMATION

BORING LOG

CORINTH
BRO 1447(29)
Bridge #36

Boring No.: **B-3**
Page No.: 1 of 1
Pin No.:
Checked By: TAD

Boring Crew: NH Boring, Derry, NH, Burke (Stantec)
Date Started: 2/22/13 Date Finished: 2/22/13
VTSPG NAD83: N 570250.62 ft E 1713339.17 ft
Station: 102+90.38 Offset: 6.46 LT
Ground Elevation: 704.2 ft

	Casing	Sampler
Type:	H.S.A.	SS
I.D.:	4.25 in	1.38 in
Hammer Wt:	N.A.	140
Hammer Fall:	N.A.	30
Hammer/Rod Type:	Safety/N	
Rig:	CME 750 <<SUB>><<SUB>> = 1	

Groundwater Observations

Date	Depth (ft)	Notes

Depth (ft)	Strata (1)	CLASSIFICATION OF MATERIALS (Description)	Blows/6" (N Value)	Moisture Content %	Gravel %	Sand %	Fines %
		Not Sampled, Frozen soil					
		Visual Classification, GrSa, brn, Moist, Rec. = 1.3 ft	27-53-76-59 (129)				
2.5							
		A-2-4, SiSa, brn, Moist, Rec. = 1.2 ft	37-23-36-33 (59)	24.4	7.0	66.0	27.0
5.0		Visual Classification, SiSa, brn, Moist, Rec. = 1.3 ft	4-3-3-5 (6)				
		Visual Classification, GrSiSa, Dark brown, Moist, Rec. = 0.7 ft	7-9-13-22 (22)				
7.5							
		Visual Classification, Sa, tan, Wet, Rec. = 1.5 ft	8-8-8-20 (16)				
10.0							
		Visual Classification, Sa, brn, Wet, Rec. = 0.2 ft	100/2 (R)				
12.5		Hole stopped @ 13.5 ft — Top of Bedrock @ 13.5 ft					
15.0							
17.5							

ABUTMENT 2
TOP OF FOOTING
EL. 694.00

Remarks:
Auger refusal on probable bedrock at 13.5 feet below ground surface.

Notes:
1. Stratification lines represent approximate boundary between material types. Transition may be gradual.
<<SUB>><<SUB>> is the hammer energy correction factor.
3. Water level readings have been made at times and under conditions stated. Fluctuations of groundwater may occur due to other factors than those present at the time measurements were made.

BORING LOG VTRANS_CORINTHVT.GPJ VERMONT AOT.GDT 3/26/13

STATE OF VERMONT
AGENCY OF TRANSPORTATION
MATERIALS & RESEARCH SECTION
SUBSURFACE INFORMATION

BORING LOG

CORINTH
BRO 1447(29)
Bridge #36

Boring No.: **B-4**
Page No.: 1 of 1
Pin No.:
Checked By: TAD

Boring Crew: NH Boring, Derry, NH, Burke (Stantec)
Date Started: 2/21/13 Date Finished: 2/21/13
VTSPG NAD83: N 570234.19 ft E 1713337.64 ft
Station: 102+98.75 Offset: 7.83 RT
Ground Elevation: 704.1 ft

	Casing	Sampler
Type:	H.S.A.	SS
I.D.:	4.25 in	1.38 in
Hammer Wt:	N.A.	140
Hammer Fall:	N.A.	30
Hammer/Rod Type:	Safety/N	
Rig:	CME 750 <<SUB>><<SUB>> = 1	

Groundwater Observations

Date	Depth (ft)	Notes

Depth (ft)	Strata (1)	CLASSIFICATION OF MATERIALS (Description)	Run (Dip deg.)	Core Rec. % (RQD %)	Drill Rate min/usft	Blows/6" (N Value)	Moisture Content %	Gravel %	Sand %	Fines %
		Not Sampled, Frozen soil								
		Visual Classification, SiSa, brn, Moist, Rec. = 1.5 ft				33-34-27-7 (61)				
2.5										
		A-2-4, SiSa, brn, Moist, Rec. = 0.7 ft				8-20-15-10 (35)	17.9	6.4	63.6	30.0
5.0		Visual Classification, GrSa, Dk/brn, Moist, Rec. = 0.3 ft				4-100/4 (R)				
		Probable weathered rock, Rec. = 0.2 ft, 5.5 ft - 6.0 ft								
		6.0 ft - 11.0 ft, Gry, Phyllite, Hard, Fresh, Fair rock, NXDC, Joints are low angle, closely spaced, smooth to rough, and tight. RMR = 64	1 (30)	90 (59)	6 5 6 5 6	Top of Bedrock @ 6.0 ft				
7.5										
10.0		11.0 ft - 16.0 ft, Gry, Phyllite, Hard, Fresh, Good rock, NXDC, Joints are low angle, moderately spaced, smooth, and tight. RMR = 47	2 (30)	97 (97)	7 7 6 7 7					
12.5										
15.0		Hole stopped @ 16.0 ft								
17.5										

ABUTMENT 2
TOP OF FOOTING
EL. 694.00

Notes:
1. Stratification lines represent approximate boundary between material types. Transition may be gradual.
<<SUB>><<SUB>> is the hammer energy correction factor.
3. Water level readings have been made at times and under conditions stated. Fluctuations of groundwater may occur due to other factors than those present at the time measurements were made.

BORING LOG VTRANS_CORINTHVT.GPJ VERMONT AOT.GDT 3/26/13

8/4/2014 12:13:45 PM V:\1953\active\195310795\transportation\drawing\z01j292_bor2.dgn

Stantec

PROJECT NAME: CORINTH	
PROJECT NUMBER: BRO 1447(29)	
FILE NAME: ...\drawing\z01j292_bor2.dgn	PLOT DATE: 8/4/2014
PROJECT LEADER: G. BOGUE	DRAWN BY: J. SOTER
DESIGNED BY: M. CHENETTE	CHECKED BY: G. BOGUE
BORING LOG 2	SHEET 21 OF 57

STATE OF VERMONT
AGENCY OF TRANSPORTATION
MATERIALS & RESEARCH SECTION
SUBSURFACE INFORMATION

BORING LOG

CORINTH
BRO 1447(29)
Bridge #36

Boring No.: **P-1**
Page No.: 1 of 1
Pin No.:
Checked By: TAD

Boring Crew: NH Boring, Derry, NH, Burke (Stantec)
Date Started: 2/21/13 Date Finished: 2/21/13
VTSPG NAD83: N 570245.30 ft E 1713249.67 ft
Station: 102+21.64 Offset: 51.00 RT
Ground Elevation: 702.0 ft

	Casing	Sampler
Type:	H.S.A.	
I.D.:	4.25 in	
Hammer Wt:	N.A.	N.A.
Hammer Fall:	N.A.	N.A.
Hammer/Rod Type:		
Rig:	CME 750 <<SUB>><<SUB>> =	

Groundwater Observations

Date	Depth (ft)	Notes

Depth (ft)	Strata (1)	CLASSIFICATION OF MATERIALS (Description)	Blows/6" (N Value)	Moisture Content %	Gravel %	Sand %	Fines %
2.5							
5.0							
7.5							
10.0							
12.5							
15.0		Top of Bedrock @ 14.5 ft					
17.5		Remarks: Advanced auger probe to refusal on probable bedrock at 14.5 feet below the ground surface.					

Notes:
1. Stratification lines represent approximate boundary between material types. Transition may be gradual.
<<SUB>><<SUB>> is the hammer energy correction factor.
3. Water level readings have been made at times and under conditions stated. Fluctuations of groundwater may occur due to other factors than those present at the time measurements were made.

BORING LOG_VTRANS_CORINTHVT.GPJ VERMONT AOT.GDT 3/28/13

STATE OF VERMONT
AGENCY OF TRANSPORTATION
MATERIALS & RESEARCH SECTION
SUBSURFACE INFORMATION

BORING LOG

CORINTH
BRO 1447(29)
Bridge #36

Boring No.: **P-2**
Page No.: 1 of 1
Pin No.:
Checked By: TAD

Boring Crew: NH Boring, Derry, NH, Burke (Stantec)
Date Started: 2/21/13 Date Finished: 2/21/13
VTSPG NAD83: N 570204.94 ft E 1713365.12 ft
Station: 103+37.46 Offset: 17.00 RT
Ground Elevation: 707.3 ft

	Casing	Sampler
Type:	H.S.A.	
I.D.:	4.25 in	
Hammer Wt:	N.A.	N.A.
Hammer Fall:	N.A.	N.A.
Hammer/Rod Type:		
Rig:	CME 750 <<SUB>><<SUB>> =	

Groundwater Observations

Date	Depth (ft)	Notes

Depth (ft)	Strata (1)	CLASSIFICATION OF MATERIALS (Description)	Blows/6" (N Value)	Moisture Content %	Gravel %	Sand %	Fines %
2.5							
5.0		Top of Bedrock @ 3.2 ft Remarks: Advanced auger probe to refusal on probable bedrock at 3.2 feet below the ground surface.					
7.5							
10.0							
12.5							
15.0							
17.5							

Notes:
1. Stratification lines represent approximate boundary between material types. Transition may be gradual.
<<SUB>><<SUB>> is the hammer energy correction factor.
3. Water level readings have been made at times and under conditions stated. Fluctuations of groundwater may occur due to other factors than those present at the time measurements were made.

BORING LOG_VTRANS_CORINTHVT.GPJ VERMONT AOT.GDT 3/28/13

8/4/2014 12:13:46 PM V:\1953\active\195310795\transportation\drawing\z01j292_bor3.dgn

Stantec

PROJECT NAME: CORINTH
PROJECT NUMBER: BRO 1447(29)

FILE NAME: ...\drawing\z01j292_bor3.dgn
PROJECT LEADER: G. BOGUE
DESIGNED BY: M. CHENETTE
BORING LOG 3

PLOT DATE: 8/4/2014
DRAWN BY: J. SOTER
CHECKED BY: G. BOGUE
SHEET 22 OF 57

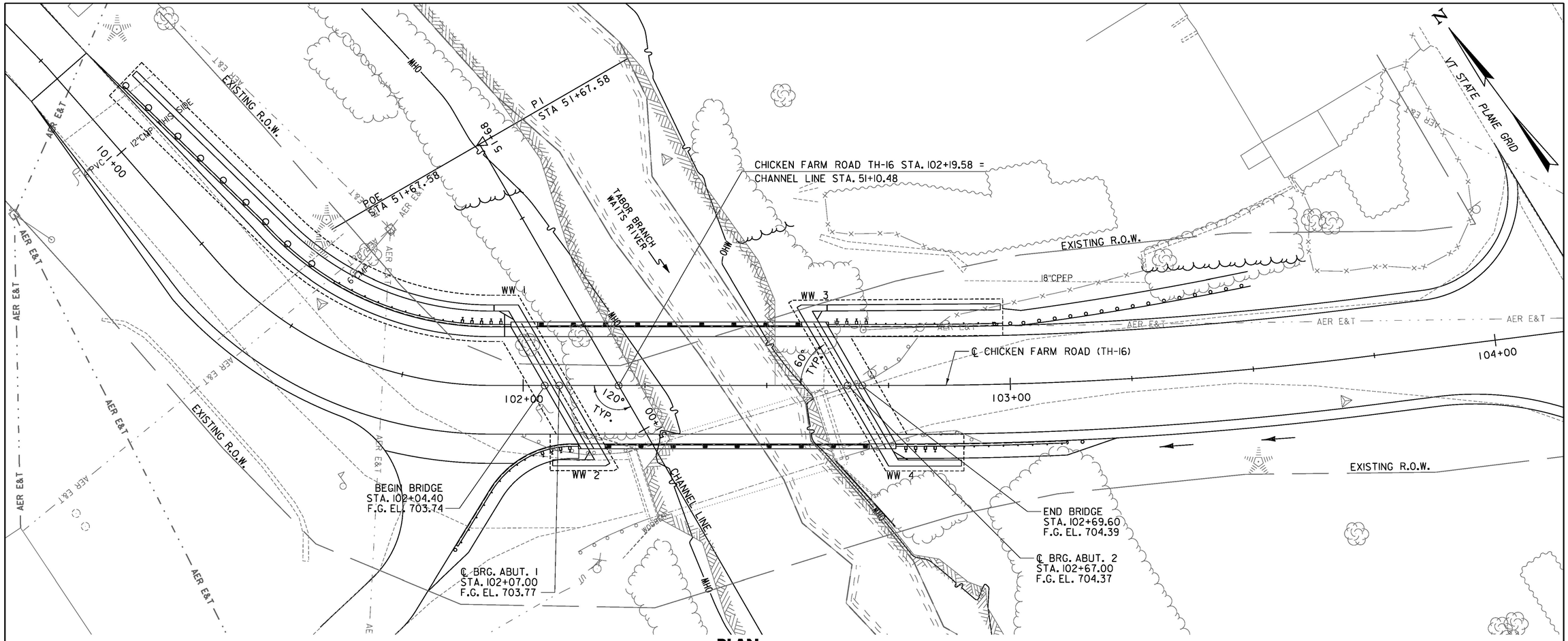

PLAN

SCALE: 1" = 10'-0"

0 10 20

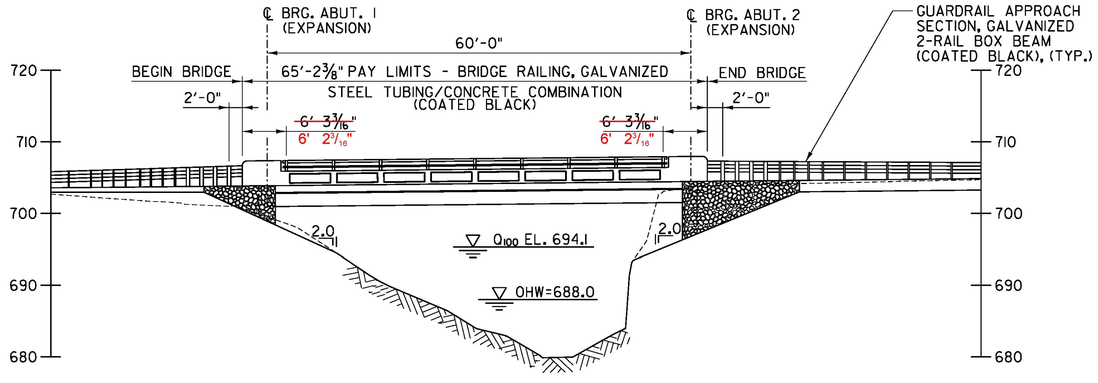

ELEVATION

SCALE: 1" = 10'-0"

0 10 20

Stantec

PROJECT NAME:	CORINTH
PROJECT NUMBER:	BRO 1447(29)
FILE NAME: ...\drawing\z01j292_bdr_pe.dgn	PLOT DATE: 8/4/2014
PROJECT LEADER: G. BOGUE	DRAWN BY: J. SOTER
DESIGNED BY: M. CHENETTE	CHECKED BY: G. BOGUE
PLAN AND ELEVATION	SHEET 23 OF 57

8/4/2014 12:13:47 PM V:\1953\active\195301795\transportation\drawing\z01j292_bdr_pe.dgn

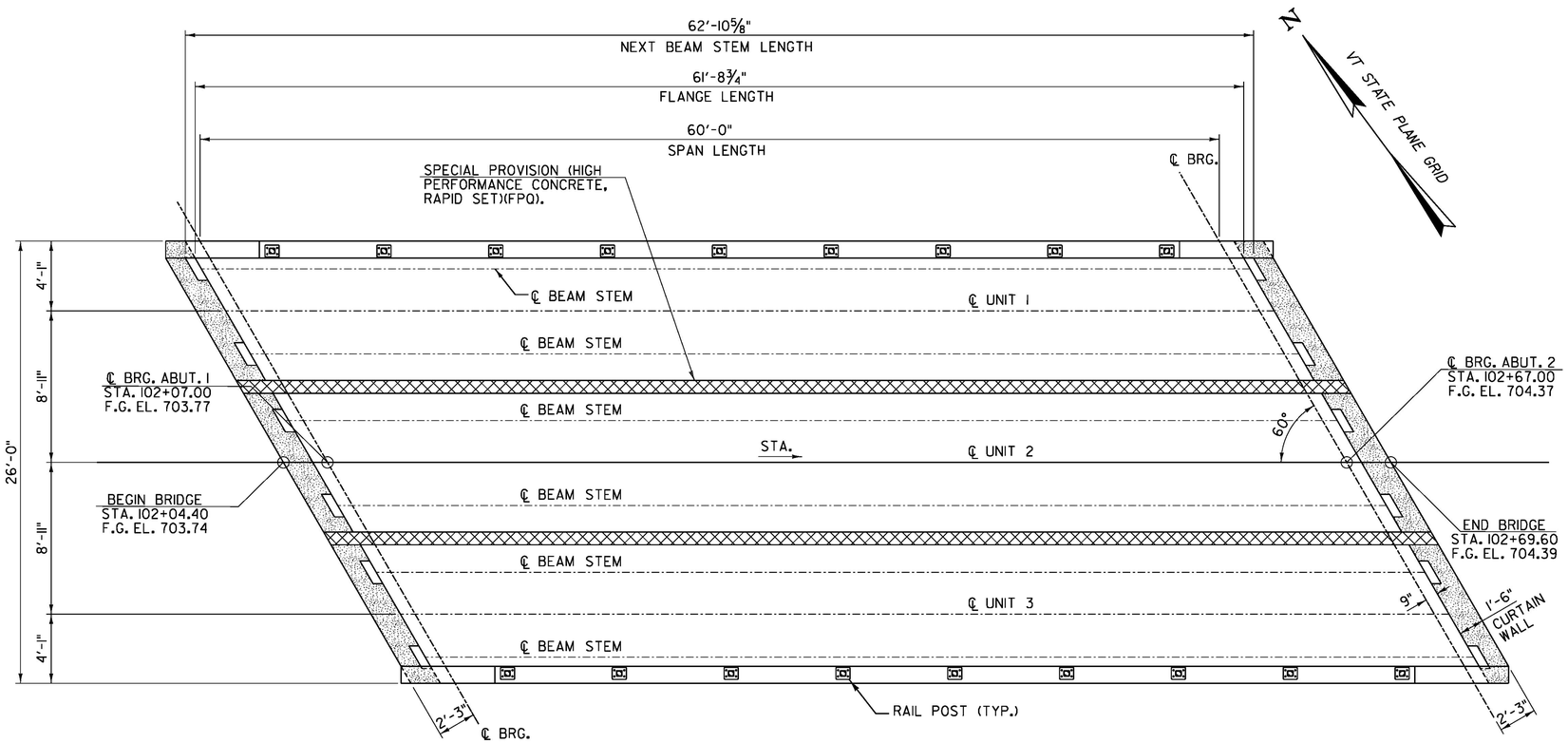

PLAN

SCALE: ¼" = 1'-0"

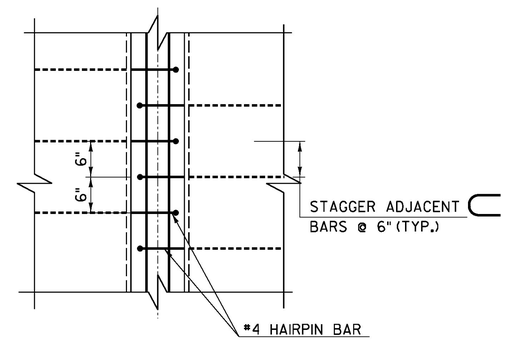

PLAN

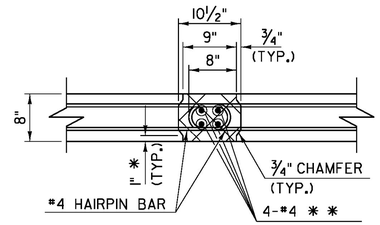

SECTION

FLANGE CONNECTION DETAILS

SCALE: 1" = 1'-0"

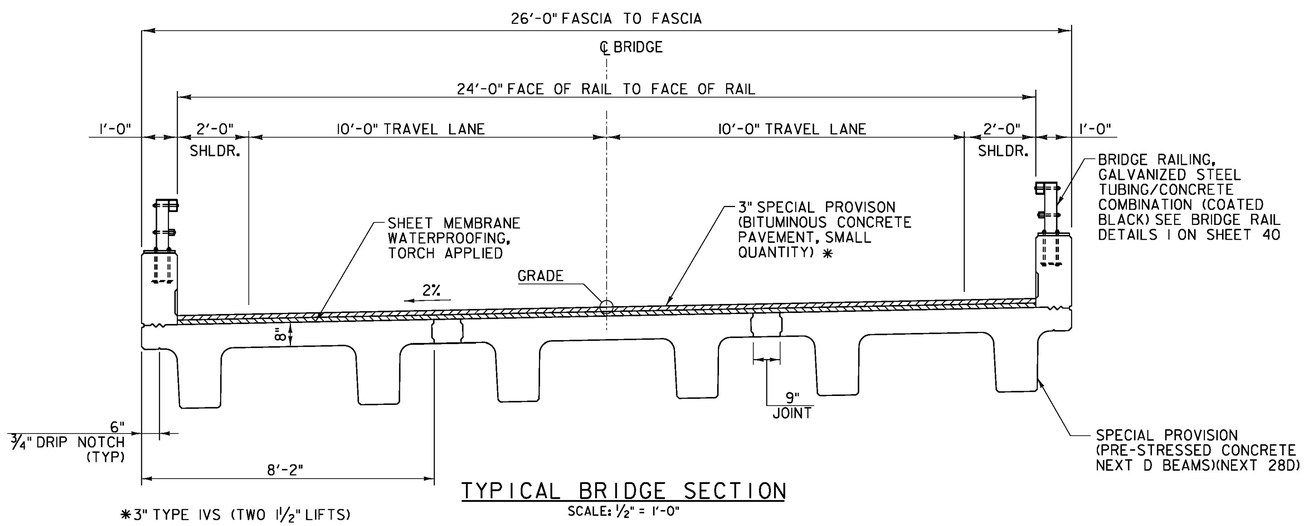

TYPICAL BRIDGE SECTION

SCALE: ½" = 1'-0"

*3" TYPE IVS (TWO 1½" LIFTS)

SPECIAL PROVISION (HIGH PERFORMANCE CONCRETE, RAPID SET)(FPQ).

* DIMENSIONS ARE TO KEY IN JOINT.

** FOUR #4 BARS SHALL BE PLACED AS SHOWN ALONG ENTIRE LENGTH OF JOINT. PAYMENT SHALL BE INCIDENTAL TO SPECIAL PROVISION (PRE-STRESSED CONCRETE NEXT D BEAMS)(NEXT 28D).

Stantec

PROJECT NAME:	CORINTH
PROJECT NUMBER:	BRO 1447(29)
FILE NAME: ...\drawing\z0ij292_framing.dgn	PLOT DATE: 8/4/2014
PROJECT LEADER: G. BOGUE	DRAWN BY: L. BUXTON
DESIGNED BY: G. BOGUE	CHECKED BY: T. KNIGHT
FRAMING PLAN	SHEET 24 OF 57

8/4/2014 12:13:49 PM V:\1953\active\195310795\transportation\drawing\z0ij292_framing.dgn

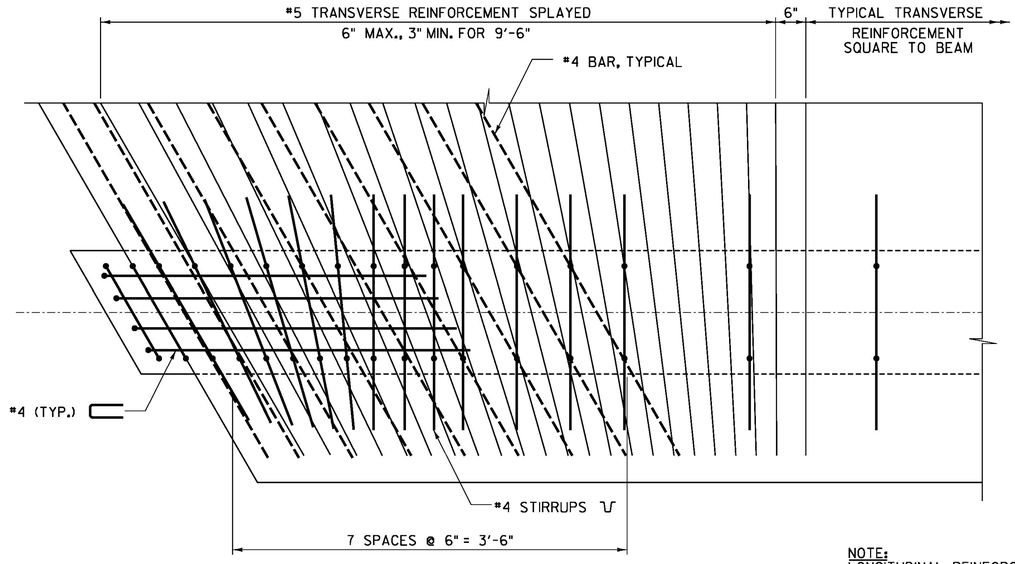

PLAN

NOTE:
LONGITUDINAL REINFORCEMENT
NOT SHOWN FOR CLARITY.

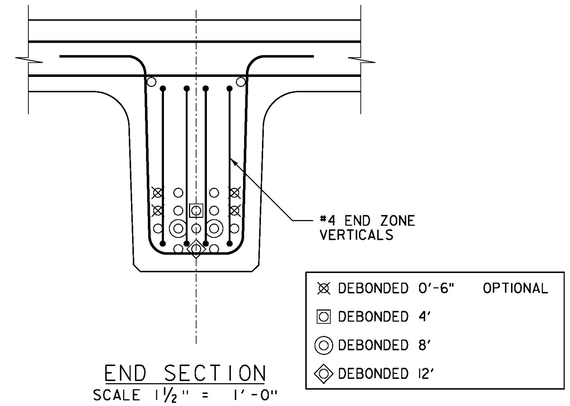

END SECTION
SCALE 1½" = 1'-0"

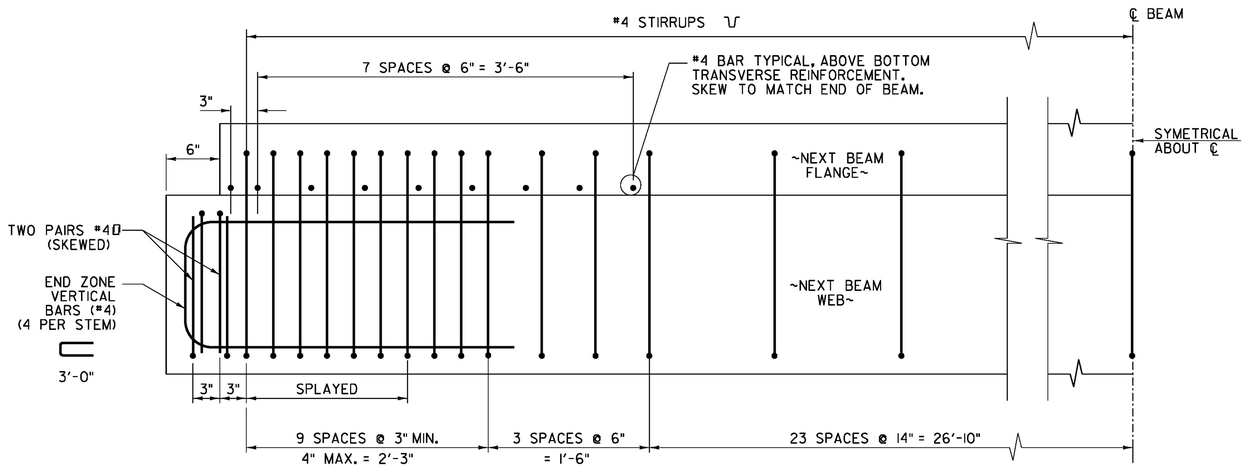

ELEVATION

ADDITIONAL END BEAM REINFORCEMENT
SCALE 1½" = 1'-0"

NOTE:
TYPICAL DECK REINFORCING AND NEXT BEAM
PRESTRESSING TENDONS NOT SHOWN FOR CLARITY

Stantec

PROJECT NAME:	CORINTH
PROJECT NUMBER:	BRO 1447(29)
FILE NAME: ...\z01J292_next_beam_dets.dgn	PLOT DATE: 8/4/2014
PROJECT LEADER: G. BOGUE	DRAWN BY: L. BUXTON
DESIGNED BY: G. BOGUE	CHECKED BY: T. KNIGHT
NEXT BEAM DETAILS 1	SHEET 25 OF 57

8/4/2014 12:13:50 PM V:\1953\active\195310795\transportation\drawing\z01J292_next_beam_dets.dgn

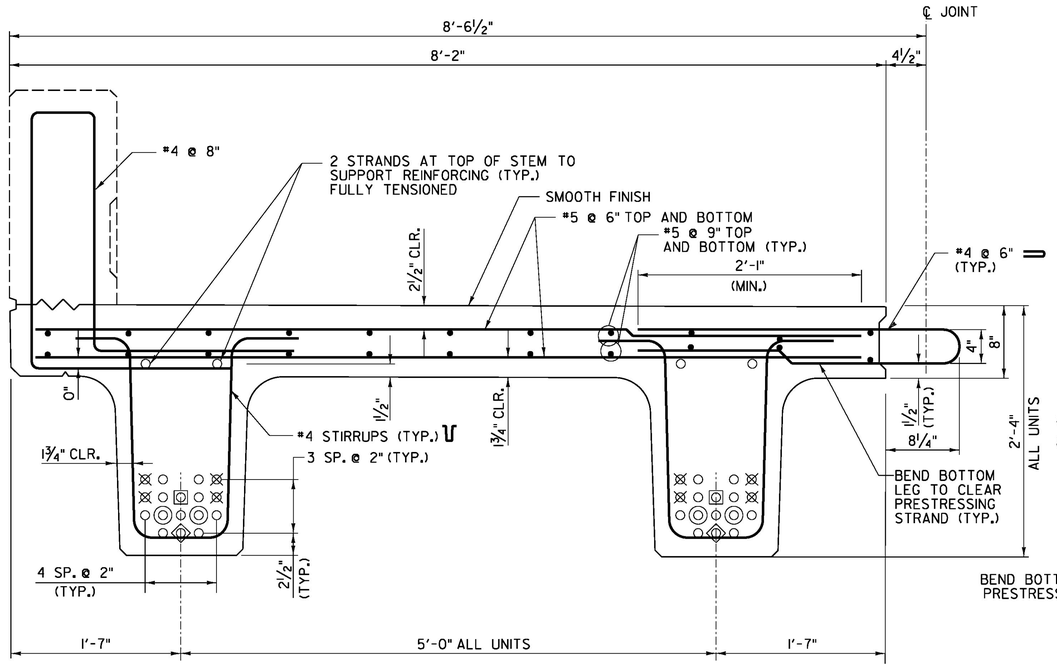

UNIT 1

TYPICAL BEAM REINFORCING
SCALE 1½" = 1'-0"

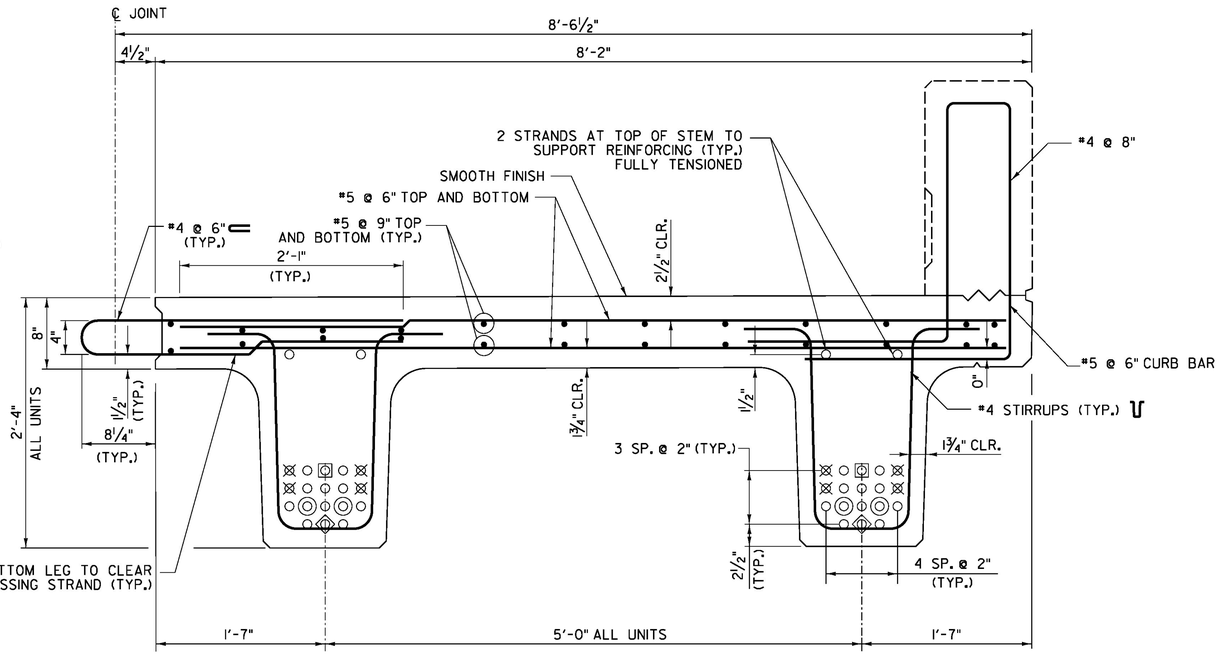

UNIT 3

TYPICAL BEAM REINFORCING
SCALE 1½" = 1'-0"

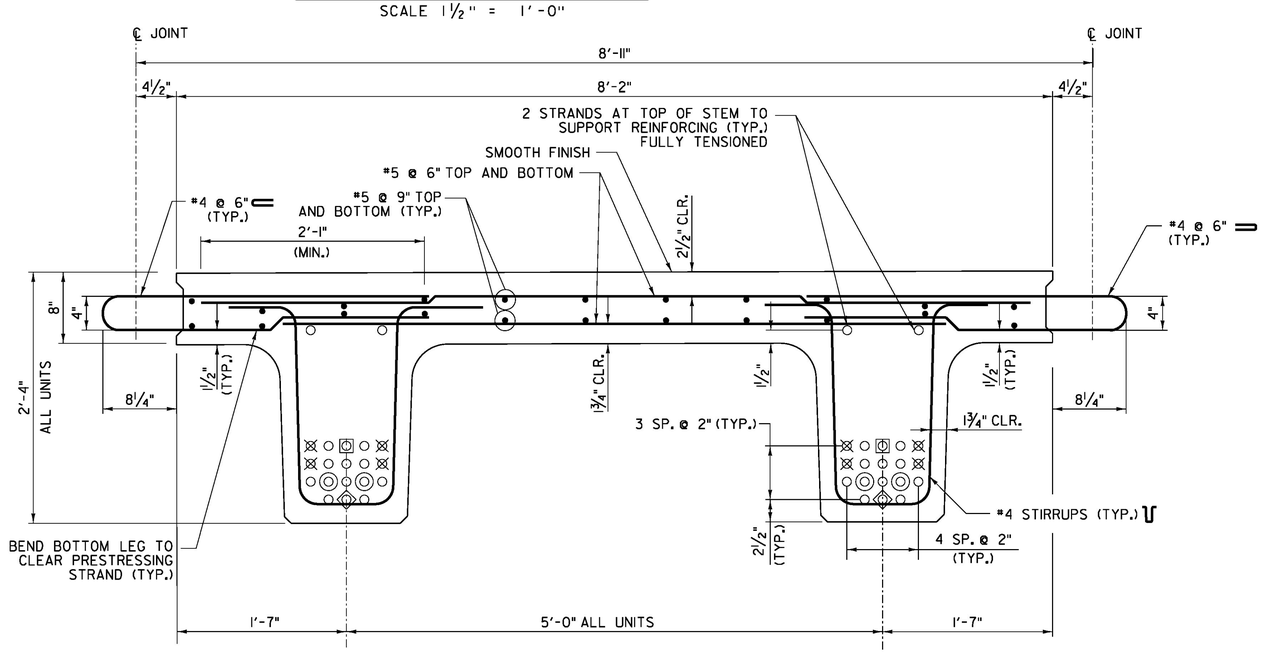

UNIT 2

TYPICAL BEAM REINFORCING
SCALE 1½" = 1'-0"

NOTES:

1. LEAVE SIX STRANDS 1'-6" LONG AT BOTH ENDS OF BEAM. SEE PRECAST CURTAIN WALL REINFORCING SECTION A-A ON SHEET 27.
2. REINFORCING STEEL SHALL MEET THE REQUIREMENTS OF SECTION 507 FOR LEVEL II REINFORCING STEEL.

Stantec

PROJECT NAME: CORINTH	
PROJECT NUMBER: BRO 1447(29)	
FILE NAME: ...\z01j292_next_beam_dets.dgn	PLOT DATE: 8/4/2014
PROJECT LEADER: G. BOGUE	DRAWN BY: L. BUXTON
DESIGNED BY: G. BOGUE	CHECKED BY: T. KNIGHT
NEXT BEAM DETAILS 2	SHEET 26 OF 57

8/4/2014 12:13:50 PM V:\1953\active\195301795\transportation\drawing\z01j292_next_beam_dets.dgn

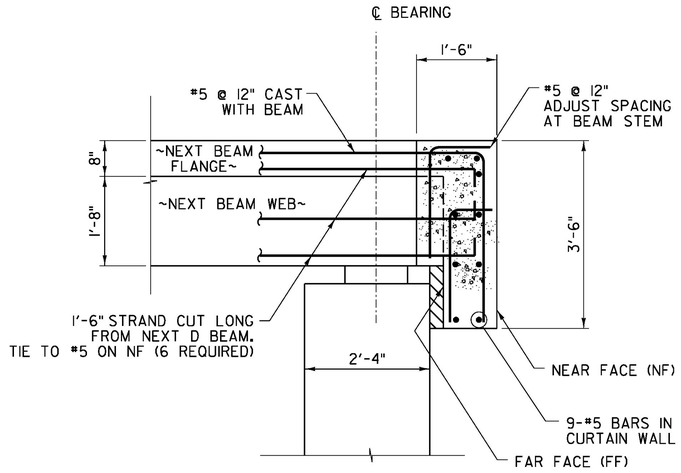

PRECAST CURTAIN WALL REINFORCING SECTION A-A

SCALE 3/4" = 1'-0"

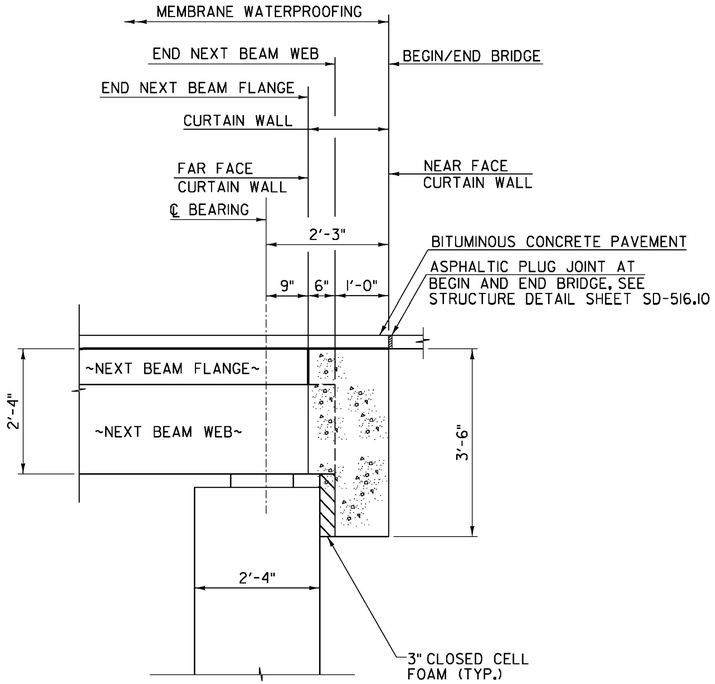

BRIDGE END DETAIL

SCALE 3/4" = 1'-0"

NOTE:
FOR LOCATION OF SECTION A-A, REFER TO SHEET 28.

Stantec

PROJECT NAME:	CORINTH
PROJECT NUMBER:	BRO 1447(29)
FILE NAME: ...\z011292_curtain_wall_dets.dgn	PLOT DATE: 8/4/2014
PROJECT LEADER: G. BOGUE	DRAWN BY: L. BUXTON
DESIGNED BY: G. BOGUE	CHECKED BY: T. KNIGHT
CURTAIN WALL DETAILS 1	SHEET 27 OF 57

8/4/2014 12:35:51 PM V:\1953\active\195310795\transportation\drawing\z011292_curtain_wall_dets.dgn

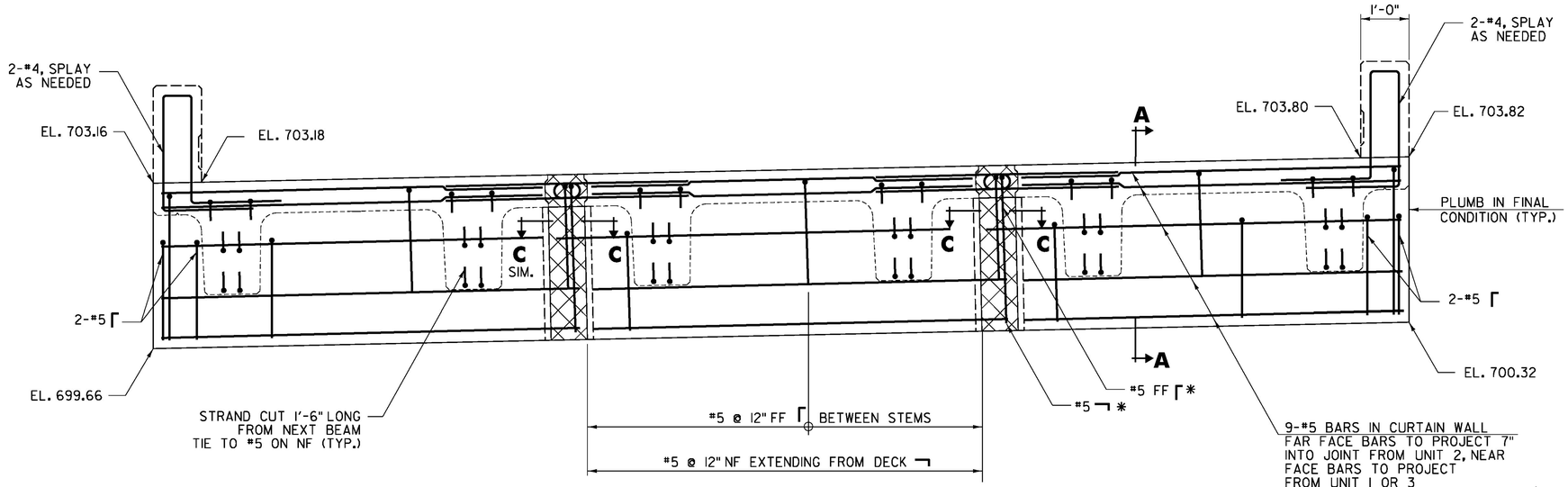

ABUTMENT 1 CURTAIN WALL ELEVATION

SCALE 3/4" = 1'-0"

*BARS FOR CLOSURE POUR INCIDENTAL TO PRECAST ITEM (TYP.)

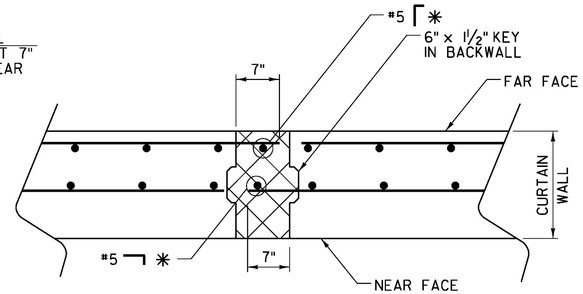

SECTION C-C

SCALE 1"=1'-0"

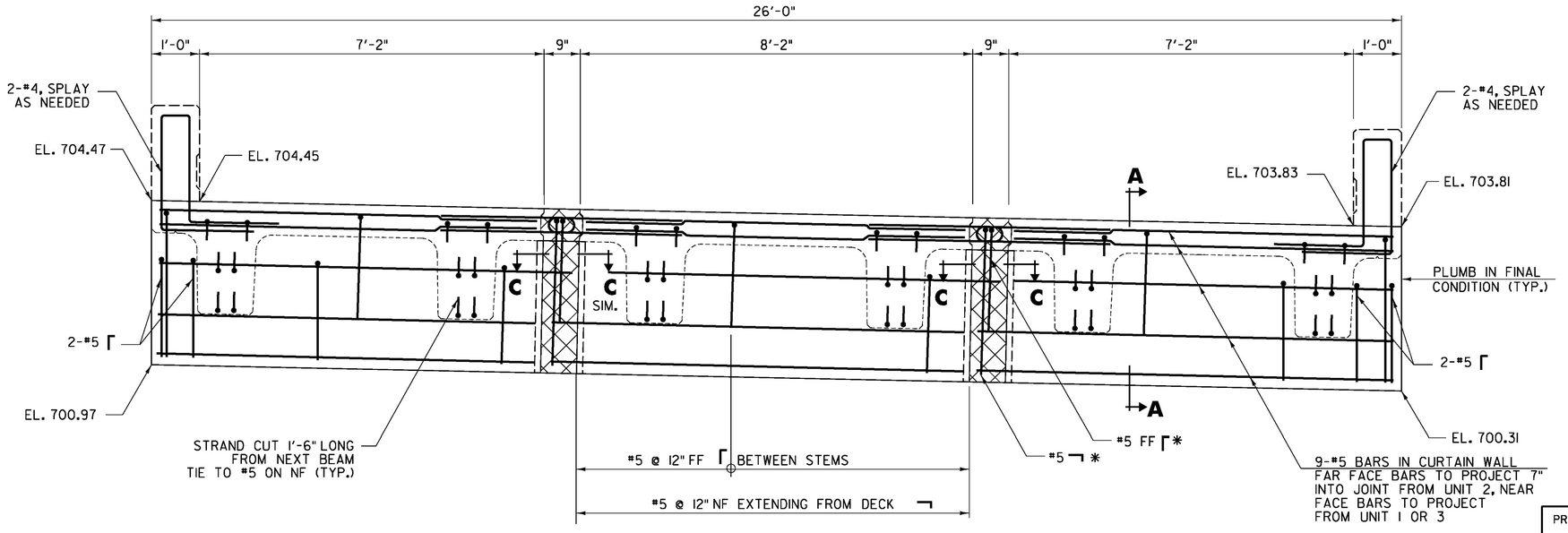

ABUTMENT 2 CURTAIN WALL ELEVATION

SCALE 3/4" = 1'-0"

*BARS FOR CLOSURE POUR INDICENTAL TO PRECAST ITEM (TYP.)

NOTE:
FOR SECTION A-A, REFER TO SHEET 27.

PROJECT NAME:	CORINTH
PROJECT NUMBER:	BRO 1447(29)
FILE NAME: ...\z011292_curtain_wall_dets.dgn	PLOT DATE: 8/4/2014
PROJECT LEADER: G. BOGUE	DRAWN BY: L. BUXTON
DESIGNED BY: G. BOGUE	CHECKED BY: T. KNIGHT
CURTAIN WALL DETAILS 2	SHEET 28 OF 57

Stantec

8/4/2014 12:13:52 PM V:\1953\active\195310795\transportation\drawing\z011292_curtain_wall_dets.dgn

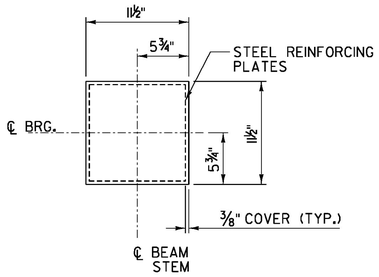

ELASTOMERIC BEARING PLAN

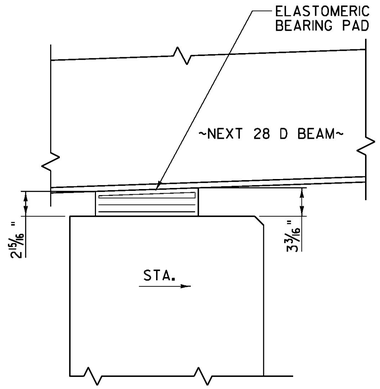

SIDE ELEVATION - ABUTMENT 1

BEARING NOTES:

1. BEARINGS SHALL CONFORM TO THE APPLICABLE SUBSECTIONS OF STANDARD SPECIFICATIONS SECTIONS 531 AND 731.

2. ALL REINFORCEMENT BETWEEN LAYERS OF ELASTOMER SHALL BE STEEL MEETING THE REQUIREMENTS OF SUBSECTION 714.02. ALL INTERNAL STEEL PLATES SHALL BE SAND BLASTED AND FREE OF COATING, RUST AND MILL SCALE. THE PLATES SHALL BE FREE OF SHARP EDGES AND BURRS.

3. THE BEARINGS ARE DESIGNED SO THAT THE SUPERSTRUCTURE MAY BE ERECTED WHEN THE BEAM TEMPERATURE IS WITHIN THE RANGE OF 20 DEGREES F AND 70 DEGREES F WITHOUT ADJUSTING THE BEARINGS FOR TEMPERATURE. IF THE BEAM TEMPERATURE IS OUTSIDE THIS RANGE, THE BEARINGS SHALL BE RESET AS DIRECTED BY THE RESIDENT.

4. STEEL REINFORCED ELASTOMERIC BEARINGS WERE DESIGNED PER METHOD = A.

5. THE ELASTOMER WAS DESIGNED WITH A SHEAR MODULUS OF 152 PSI +/- 15%.

6. ABUTMENT 1 AND 2 BEARINGS
   A. DESIGN DEAD LOAD REACTION = 34.87 KIPS/BEARING
   B. DESIGN LIVE LOAD REACTION = 37.68 KIPS/BEARING (NO IMPACT)
   C. ROTATION CAPACITY = 0.018 RADIANS
   D. LONGITUDINAL DESIGN TRANSLATION = 0.432"

7. ALL BEARINGS SHALL BE MARKED PRIOR TO SHIPPING. THE MARKS SHALL INCLUDE THE BEARING LOCATION ON THE BRIDGE, AND A DIRECTION ARROW THAT POINTS UP-STATION. ALL MARKS SHALL BE PERMANENT AND SHALL BE VISIBLE AFTER THE BEARING IS INSTALLED.

8. THE ELASTOMER SHALL BE NEOPRENE MEETING THE REQUIREMENTS OF SUBSECTION 731.03.

9. BEARING DESIGN SHALL BE PER THE AASHTO LRFD BRIDGE DESIGN SPECIFICATIONS 5TH EDITION AND ITS LATEST REVISIONS.

10. ALTERNATE CONFIGURATIONS FOR BEARINGS MAY BE SUBMITTED FOR APPROVAL. ANY ALTERNATE SUBMITTED SHALL BE DESIGNED AND CERTIFIED TO MEET THE DESIGN LOADS AND CRITERIA SHOWN ON THE PLANS.

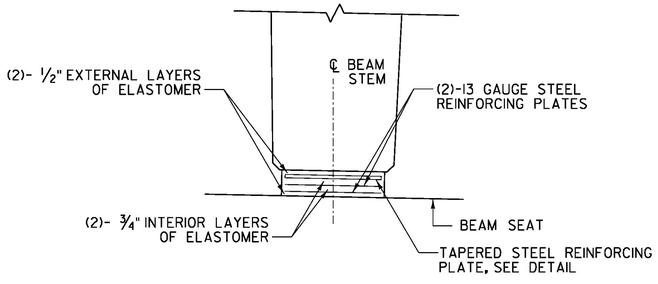

FRONT ELEVATION

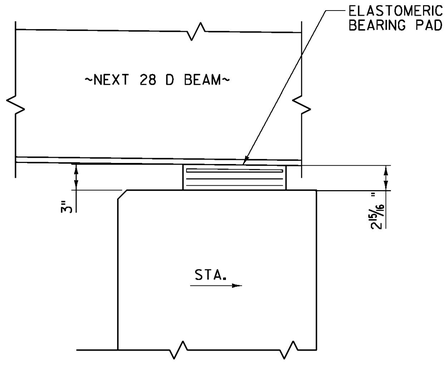

SIDE ELEVATION - ABUTMENT 2

ELASTOMERIC BEARING ASSEMBLY

SCALE 1½" = 1'-0"

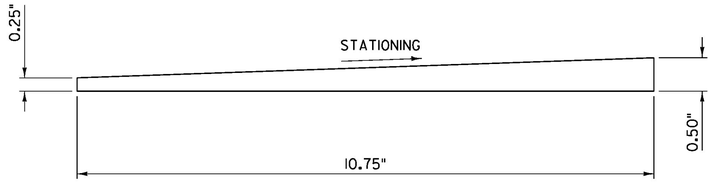

ABUTMENT 1 STEEL REINFORCING PLATE DETAIL

NOT TO SCALE

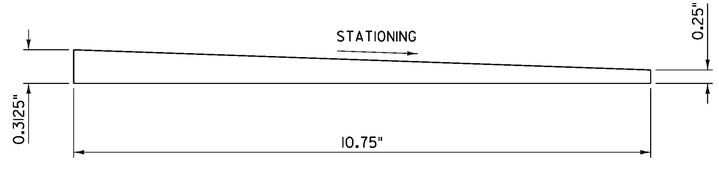

ABUTMENT 2 STEEL REINFORCING PLATE DETAIL

NOT TO SCALE

Stantec

PROJECT NAME: CORINTH	
PROJECT NUMBER: BRO 1447(29)	
FILE NAME: ...\drawing\z01j292_brgs.dgn	PLOT DATE: 8/4/2014
PROJECT LEADER: G. BOGUE	DRAWN BY: L. BUXTON
DESIGNED BY: J. HUNGERFORD	CHECKED BY: G. BOGUE
BEARING DETAILS	SHEET 29 OF 57

8/4/2014 12:13:53 PM V:\1953\active\195310795\transportation\drawing\z01j292_brgs.dgn

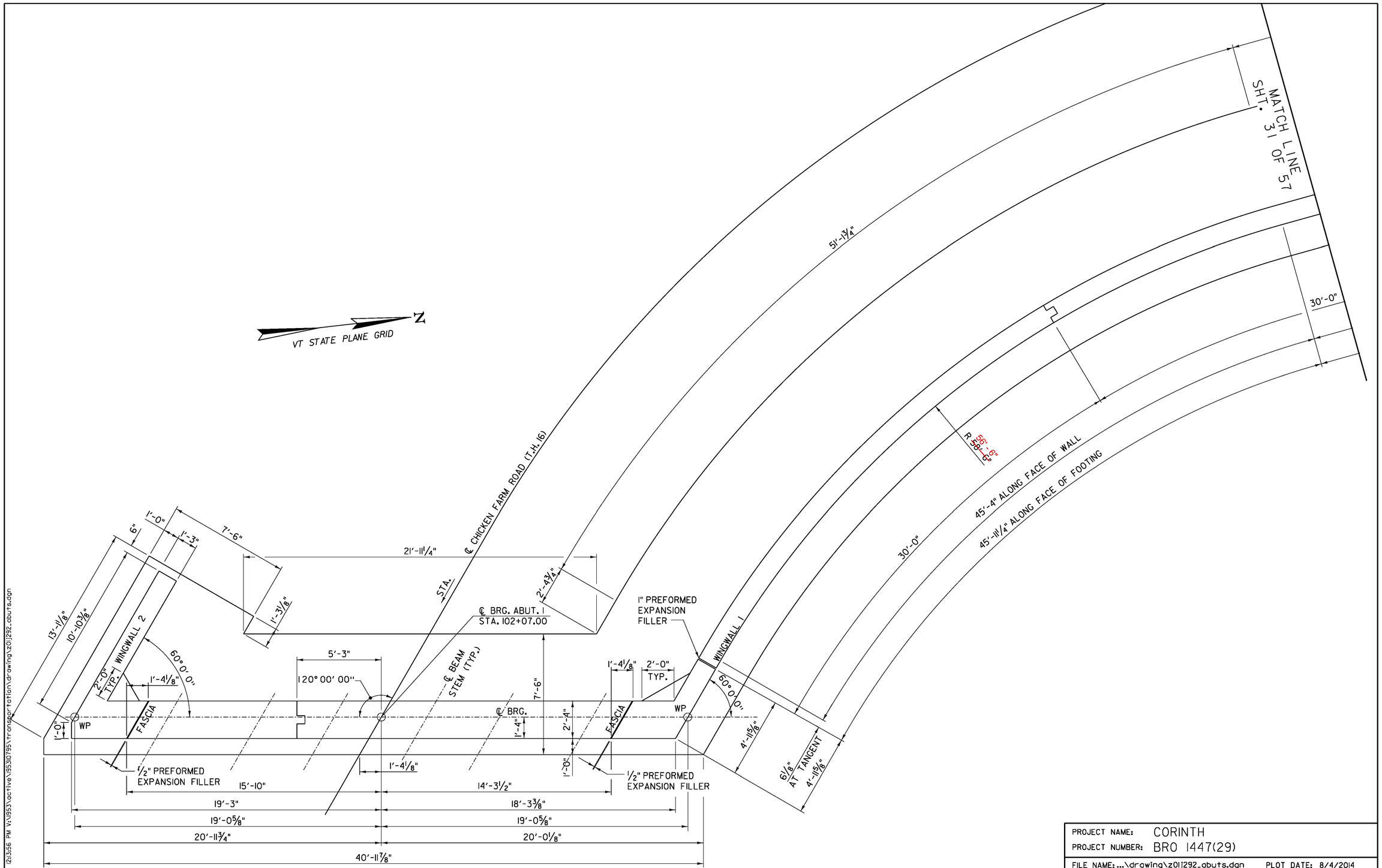

ABUTMENT 1 PLAN

SCALE ⅜" = 1'-0"

PROJECT NAME:	CORINTH
PROJECT NUMBER:	BRO 1447(29)
FILE NAME: ...\drawing\z0lj292_abuts.dgn	PLOT DATE: 8/4/2014
PROJECT LEADER: G. BOGUE	DRAWN BY: L. BUXTON
DESIGNED BY: J. HUNGERFORD	CHECKED BY: G. BOGUE
ABUTMENT 1 MASONRY 1	SHEET 30 OF 57

Stantec

8/4/2014 12:35:56 PM V:\1953\active\195310795\transportation\drawing\z0lj292_abuts.dgn

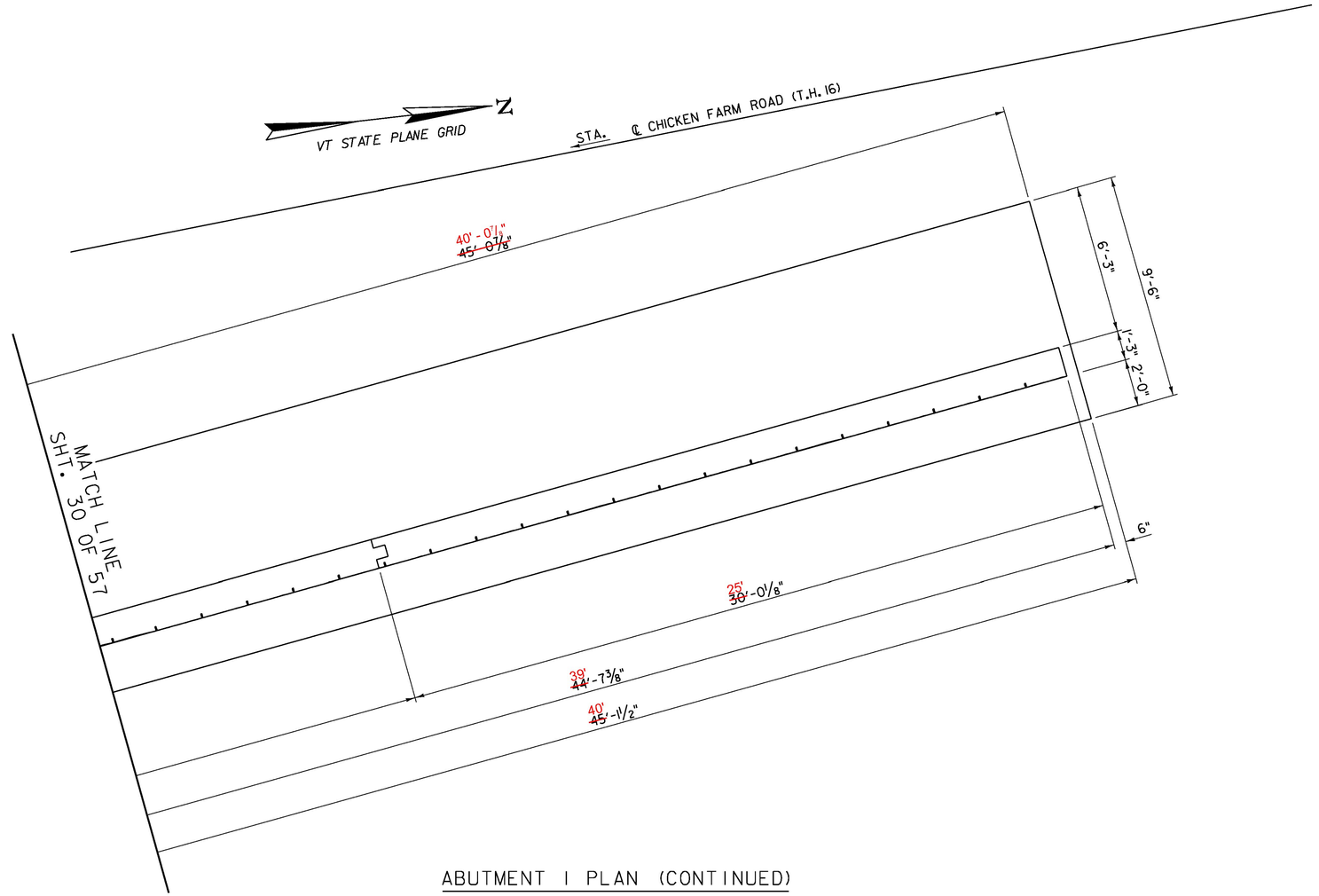

ABUTMENT 1 PLAN (CONTINUED)

SCALE 3/8" = 1'-0"

8/4/2014 12:13:58 PM V:\1953\active\195310795\transportation\drawing\z011292_abuts.dgn

Stantec

PROJECT NAME:	CORINTH
PROJECT NUMBER:	BRO 1447(29)
FILE NAME: ...\drawing\z011292_abuts.dgn	PLOT DATE: 8/4/2014
PROJECT LEADER: G. BOGUE	DRAWN BY: L. BUXTON
DESIGNED BY: J. HUNGERFORD	CHECKED BY: G. BOGUE
ABUTMENT 1 MASONRY 2	SHEET 31 OF 57

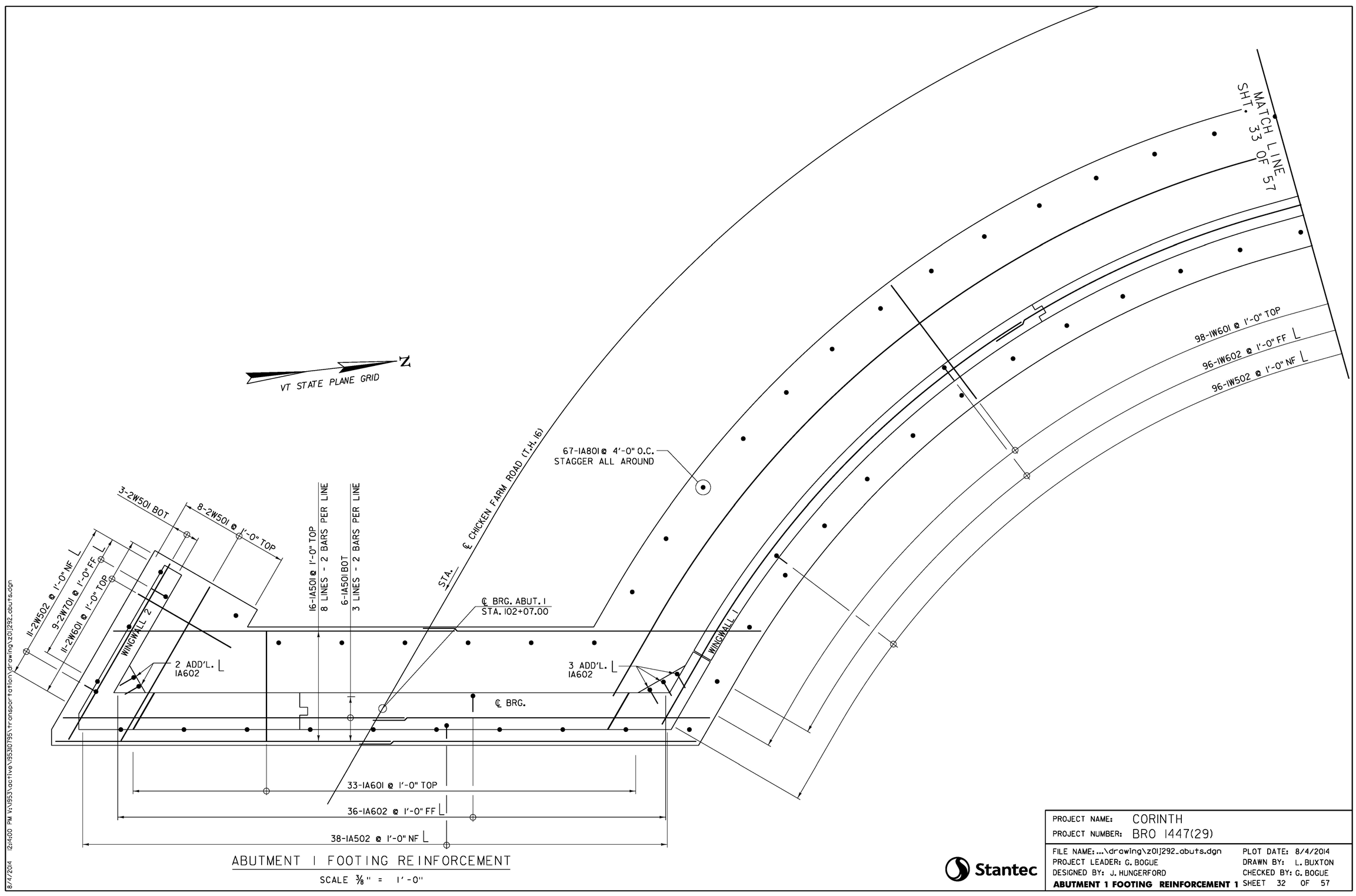

ABUTMENT 1 FOOTING REINFORCEMENT

SCALE 3/8" = 1'-0"

8/4/2014 12:1400 PM V:\1953\active\195310795\transportation\drawing\z01j292_abuts.dgn

PROJECT NAME:	CORINTH
PROJECT NUMBER:	BRO 1447(29)
FILE NAME: ...\drawing\z01j292_abuts.dgn	PLOT DATE: 8/4/2014
PROJECT LEADER: G. BOGUE	DRAWN BY: L. BUXTON
DESIGNED BY: J. HUNGERFORD	CHECKED BY: G. BOGUE
ABUTMENT 1 FOOTING REINFORCEMENT 1	SHEET 32 OF 57

Stantec

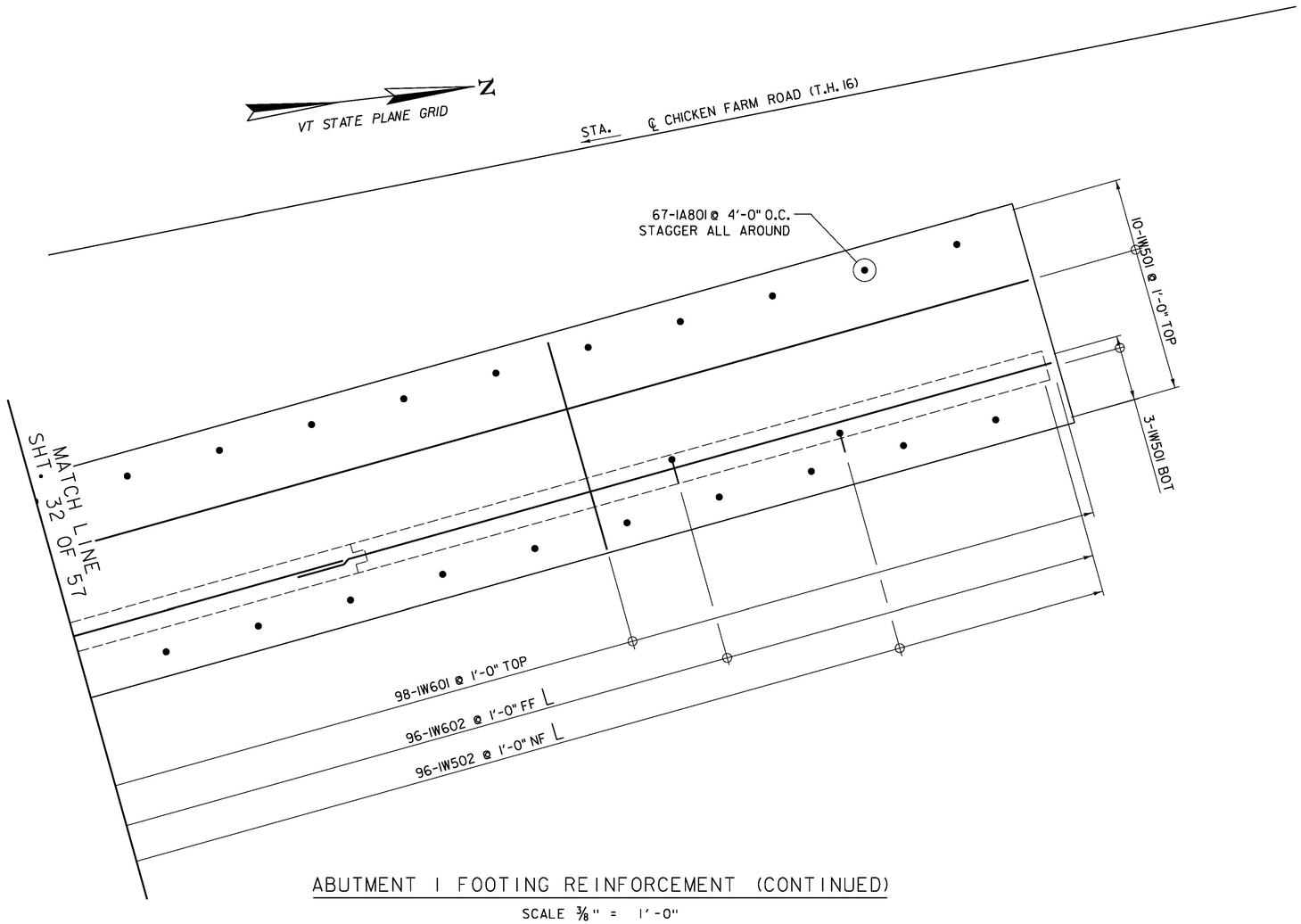

ABUTMENT 1 FOOTING REINFORCEMENT (CONTINUED)

SCALE 3/8" = 1'-0"

8/4/2014 12:14:02 PM V:\1953\active\195310795\transportation\drawing\z011292_abuts.dgn

Stantec

PROJECT NAME:	CORINTH
PROJECT NUMBER:	BRO 1447(29)
FILE NAME: ...\drawing\z011292_abuts.dgn	PLOT DATE: 8/4/2014
PROJECT LEADER: G. BOGUE	DRAWN BY: L. BUXTON
DESIGNED BY: J. HUNGERFORD	CHECKED BY: G. BOGUE
ABUTMENT 1 FTG. REINFORCEMENT 2	SHEET 33 OF 57

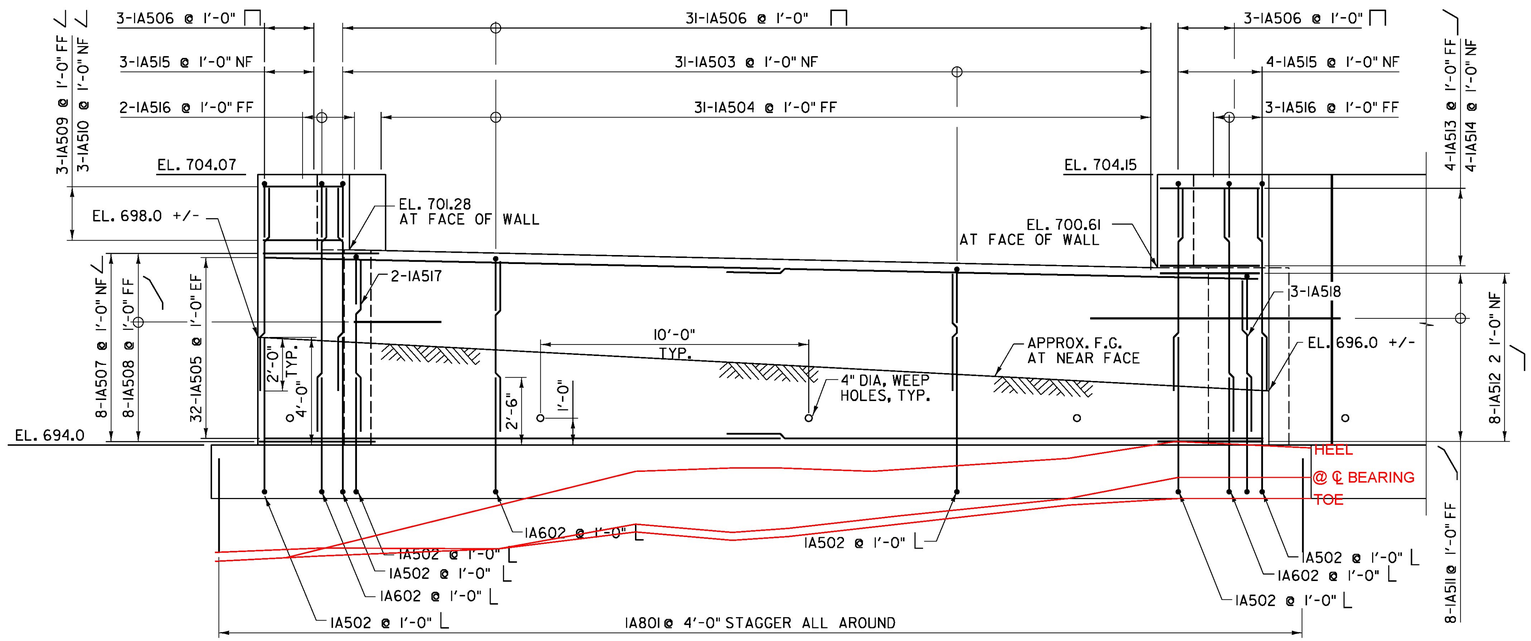

ABUTMENT 1 REINFORCEMENT

SCALE 3/8" = 1'-0"

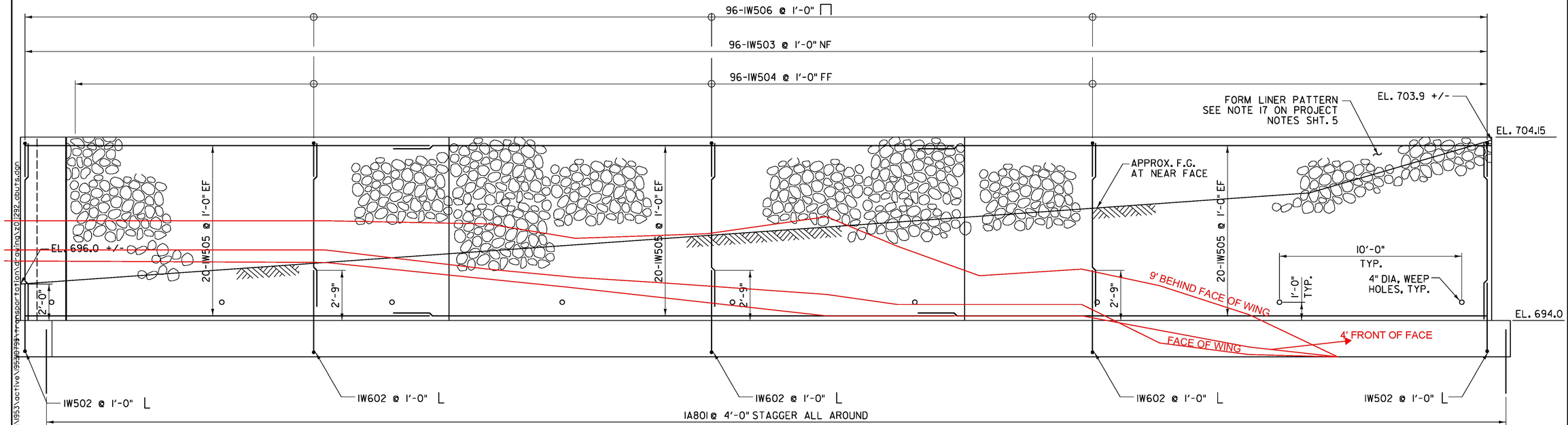

WINGWALL 1 ELEVATION (CURVED)

SCALE 3/8" = 1'-0"

Stantec

PROJECT NAME:	CORINTH
PROJECT NUMBER:	BRO 1447(29)
FILE NAME: ...\drawing\z01j292_abuts.dgn	PLOT DATE: 8/4/2014
PROJECT LEADER: G. BOGUE	DRAWN BY: L. BUXTON
DESIGNED BY: J. HUNGERFORD	CHECKED BY: G. BOGUE
ABUTMENT 1 & WW1 REINFORCEMENT	SHEET 34 OF 57

8/4/2014 12:14:04 PM V:\1953\active\195306794\transportation\drawing\z01j292_abuts.dgn

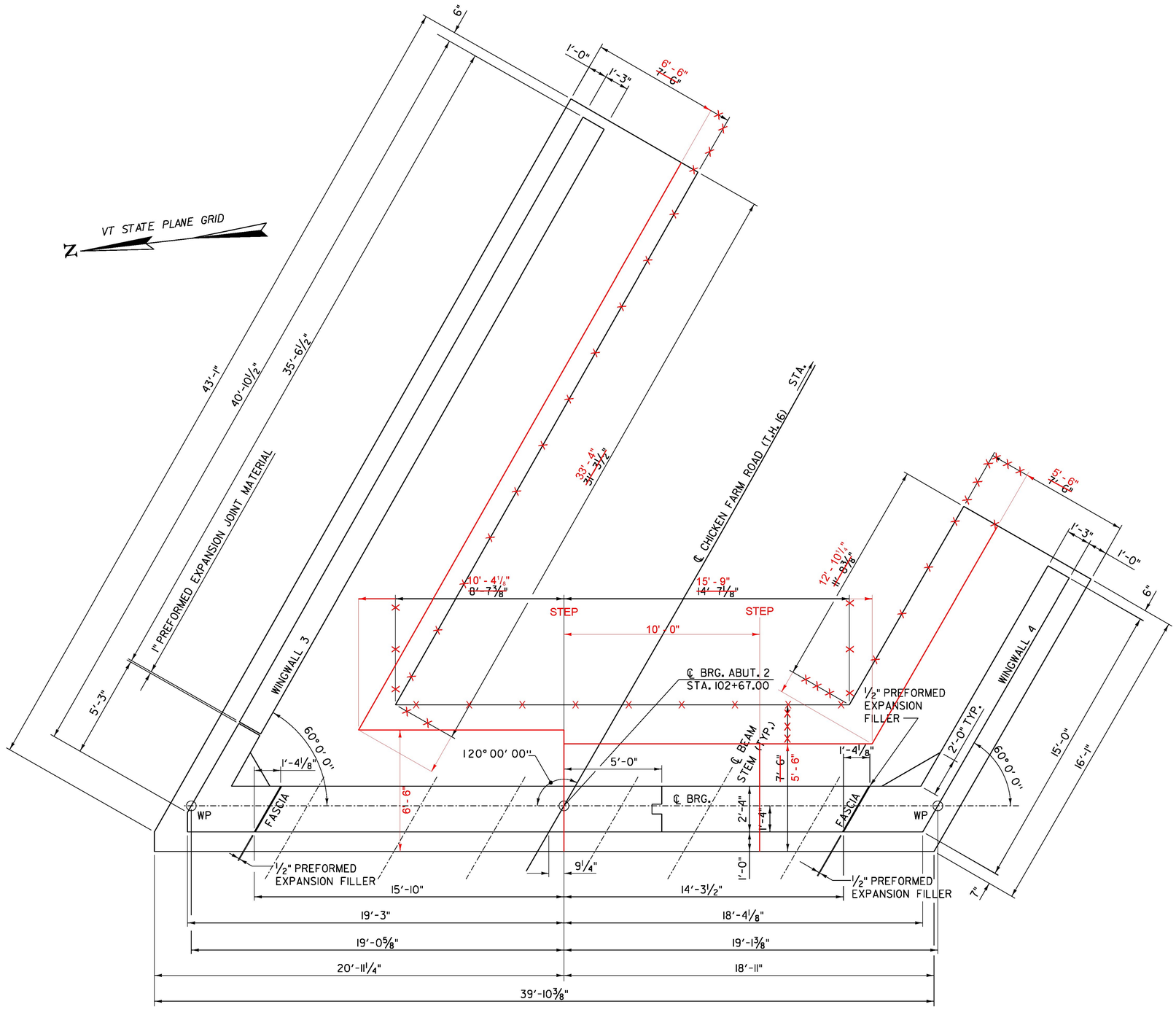

ABUTMENT 2 PLAN

SCALE ⅜" = 1'-0"

8/4/2014 12:4:06 PM V:\1953\active\195310795\transportation\drawing\z01j292_abuts.dgn

Stantec

PROJECT NAME:	CORINTH
PROJECT NUMBER:	BRO 1447(29)
FILE NAME: ...\drawing\z01j292_abuts.dgn	PLOT DATE: 8/4/2014
PROJECT LEADER: G. BOGUE	DRAWN BY: L. BUXTON
DESIGNED BY: J. HUNGERFORD	CHECKED BY: G. BOGUE
ABUTMENT 2 MASONRY	SHEET 35 OF 57

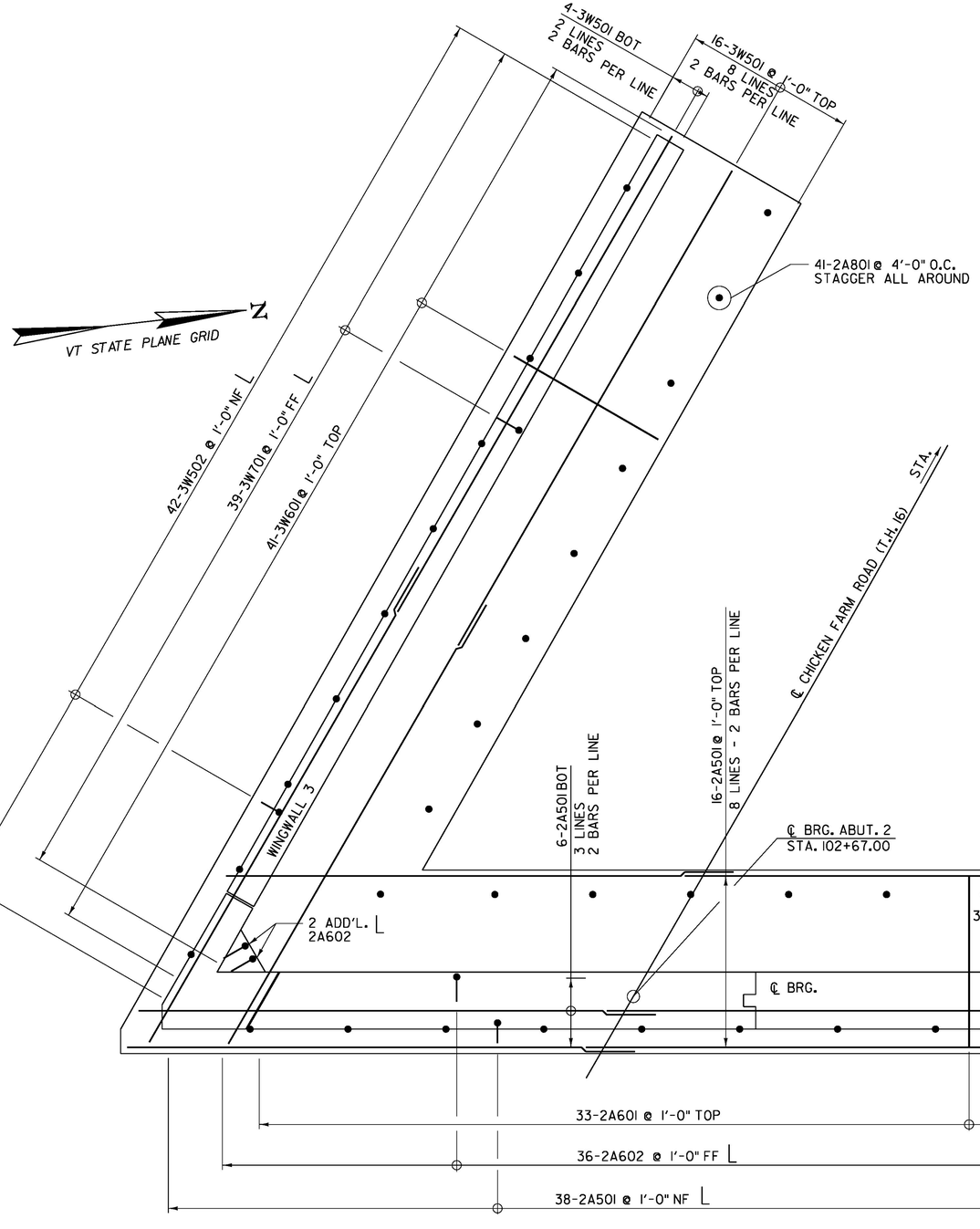

ABUTMENT 2 FOOTING REINFORCEMENT

SCALE 3/8" = 1'-0"

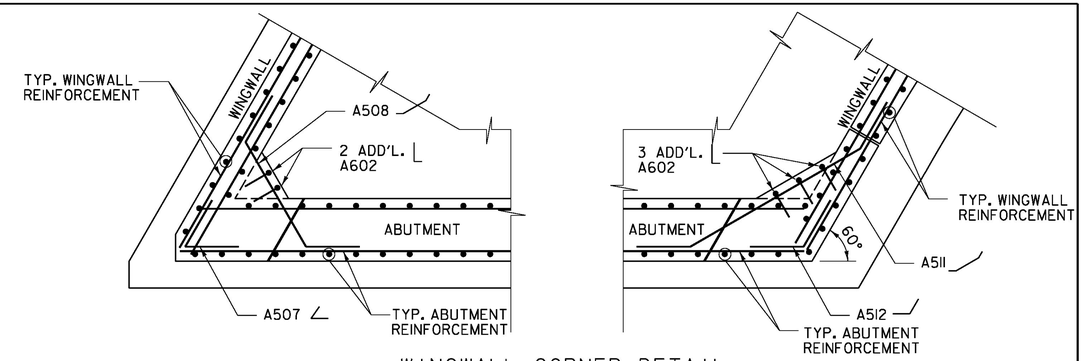

WINGWALL CORNER DETAIL
BELOW BRIDGE SEAT

SCALE 3/8" = 1'-0"

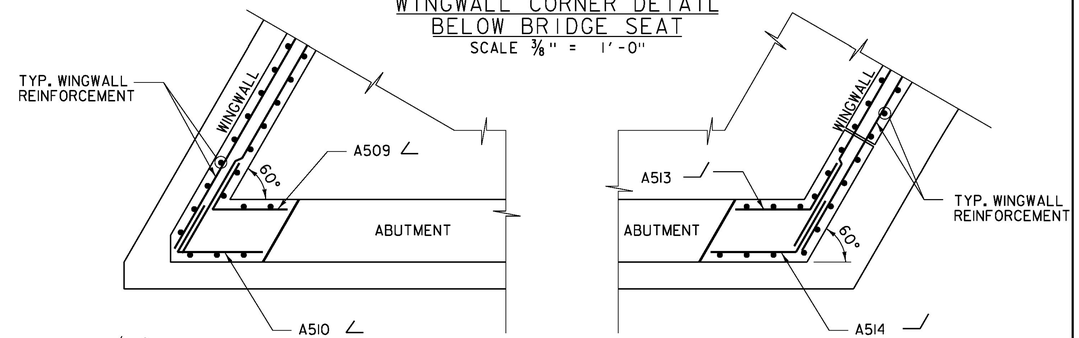

WINGWALL CORNER DETAIL
ABOVE BRIDGE SEAT

SCALE 3/8" = 1'-0"

PROJECT NAME:	CORINTH
PROJECT NUMBER:	BRO 1447(29)
FILE NAME: ...\drawing\z01j292_abuts.dgn	PLOT DATE: 8/4/2014
PROJECT LEADER: G. BOGUE	DRAWN BY: L. BUXTON
DESIGNED BY: J. HUNGERFORD	CHECKED BY: G. BOGUE
ABUTMENT 2 FOOTING REINFORCEMENT	SHEET 36 OF 57

Stantec

8/4/2014 12:14:08 PM V:\1953\active\195310795\transportation\drawing\z01j292_abuts.dgn

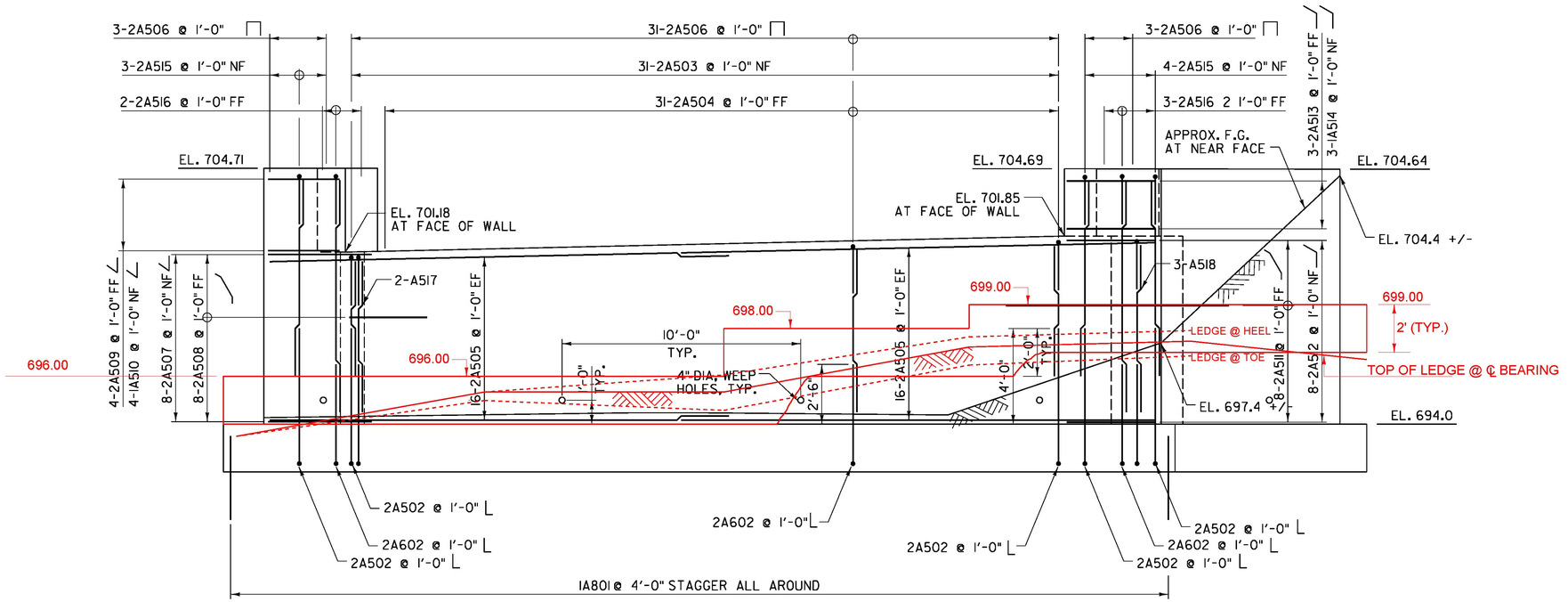

ABUTMENT 2 REINFORCEMENT

SCALE 3/8" = 1'-0"

8/4/2014 12:14:10 PM V:\1953\active\195310795\transportation\drawing\z01j292_abuts.dgn

Stantec

PROJECT NAME: CORINTH	
PROJECT NUMBER: BRO 1447(29)	
FILE NAME: ...\drawing\z01j292_abuts.dgn	PLOT DATE: 8/4/2014
PROJECT LEADER: G. BOGUE	DRAWN BY: L. BUXTON
DESIGNED BY: J. HUNGERFORD	CHECKED BY: G. BOGUE
ABUTMENT 2 REINFORCEMENT	SHEET 37 OF 57

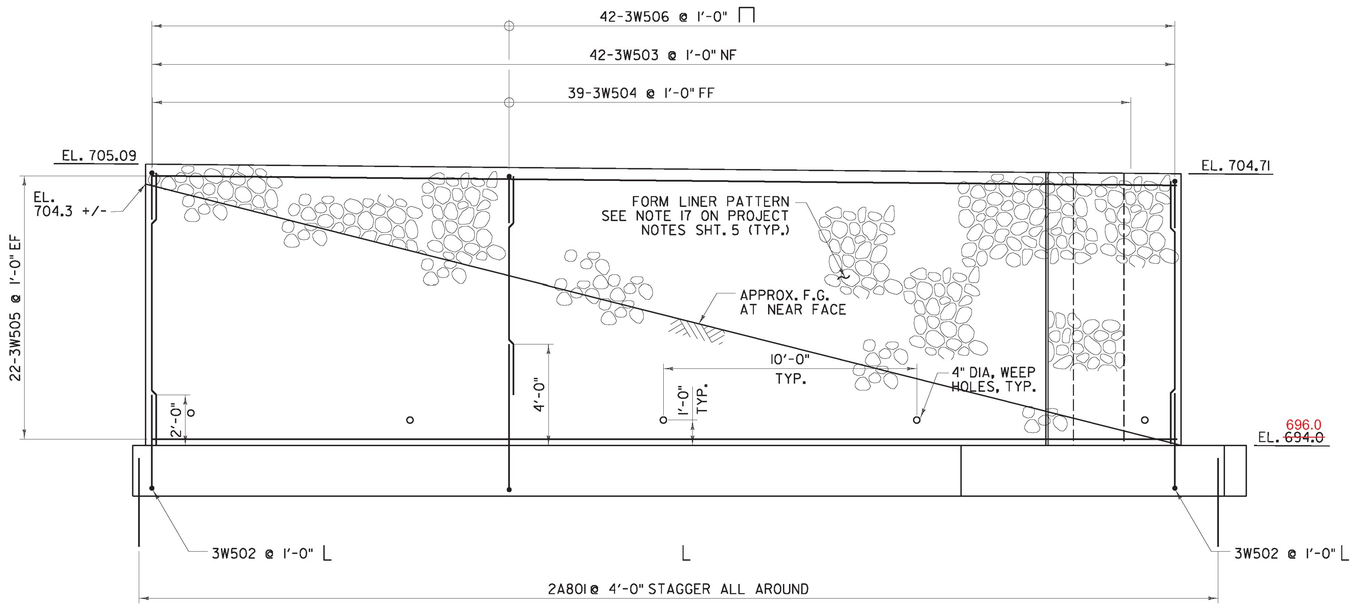

WINGWALL 3 ELEVATION

SCALE 3/8" = 1'-0"

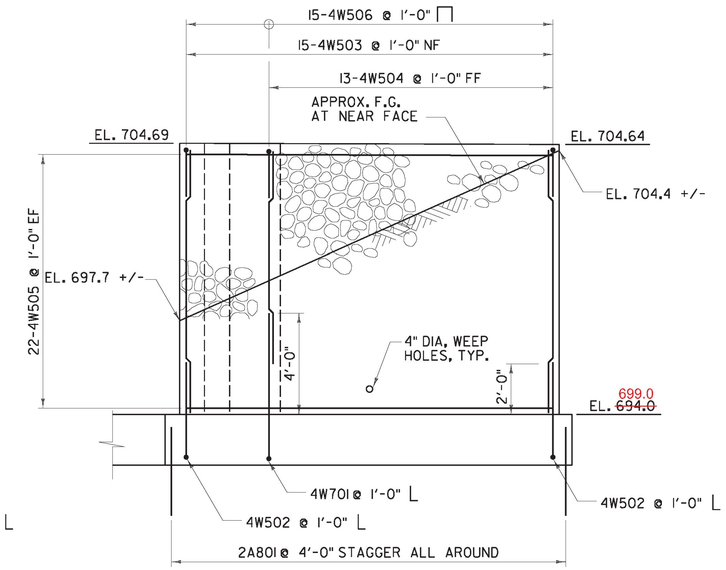

WINGWALL 4 ELEVATION

SCALE 3/8" = 1'-0"

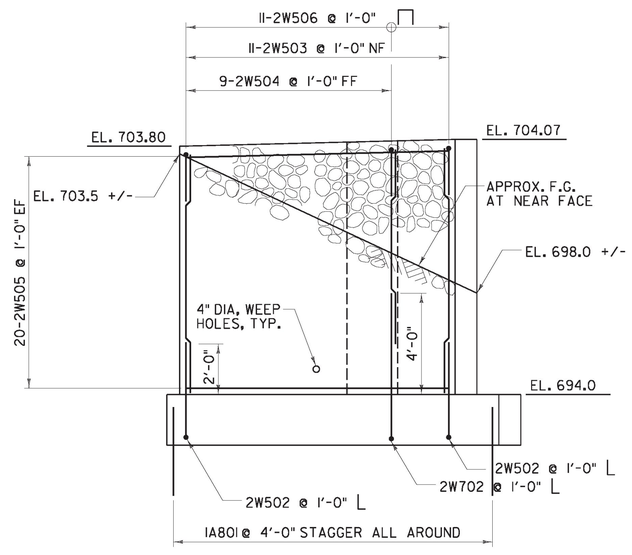

WINGWALL 2 ELEVATION

SCALE 3/8" = 1'-0"

Stantec

PROJECT NAME: CORINTH	
PROJECT NUMBER: BRO 1447(29)	
FILE NAME: ...\drawing\z01j292_abuts.dgn	PLOT DATE: 8/4/2014
PROJECT LEADER: G. BOGUE	DRAWN BY: L. BUXTON
DESIGNED BY: J. HUNGERFORD	CHECKED BY: G. BOGUE
WINGWALL 2, 3 & 4 REINFORCEMENT	SHEET 38 OF 57

8/4/2014 12:14:12 PM V:\1953\active\195310795\transportation\drawing\z01j292_abuts.dgn

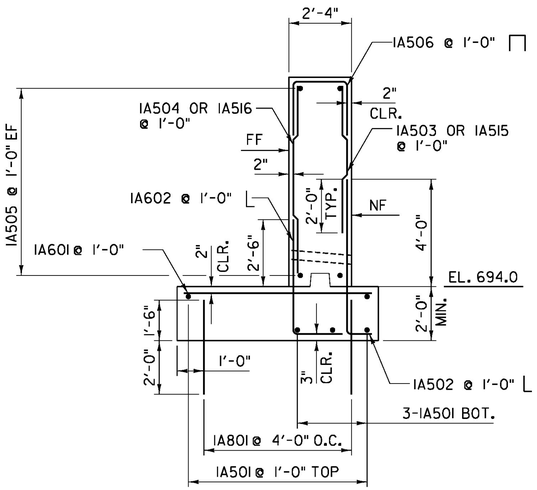

ABUTMENT No. 1 SECTION

SCALE: 3/8" = 1'-0"

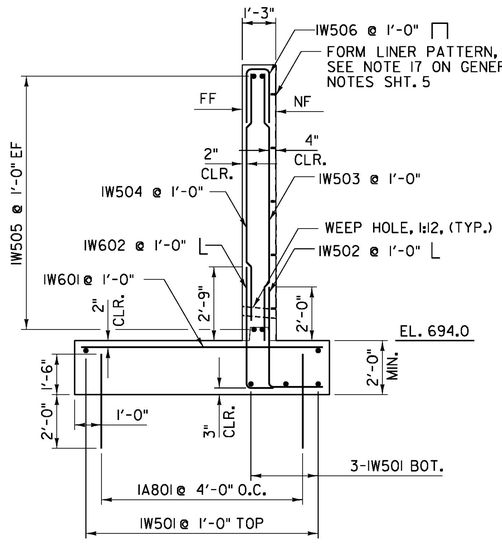

WINGWALL No. 1 SECTION

SCALE: 3/8" = 1'-0"

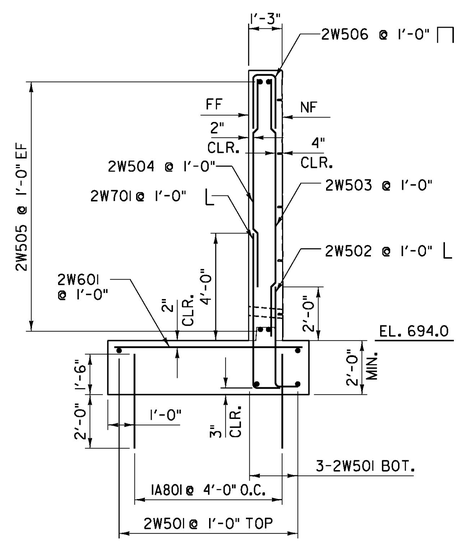

WINGWALL No. 2 SECTION

SCALE: 3/8" = 1'-0"

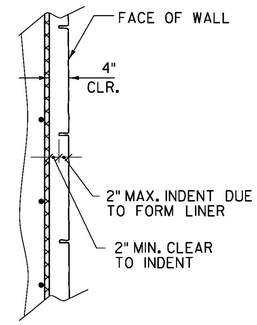

FORM LINER CLEAR COVER DETAIL

NOT TO SCALE

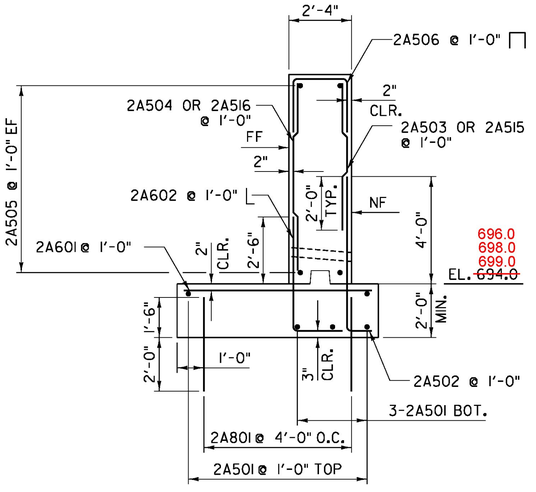

ABUTMENT No. 2 SECTION

SCALE: 3/8" = 1'-0"

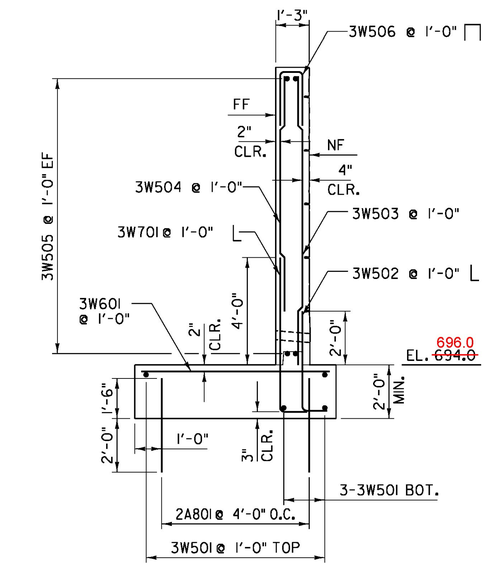

WINGWALL No. 3 SECTION

SCALE: 3/8" = 1'-0"

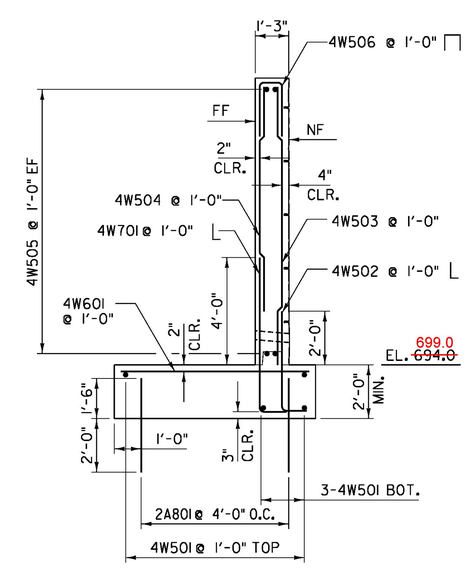

WINGWALL No. 4 SECTION

SCALE: 3/8" = 1'-0"

NF = NEAR FACE
FF = FAR FACE
EF = EACH FACE
▲ = CUT TO FIT IN FIELD

3" CLEAR UNLESS OTHERWISE SPECIFIED ON PLANS.

ALL LAPS ARE 2'-0" UNLESS OTHERWISE SPECIFIED ON THE PLANS.

Stantec

PROJECT NAME:	CORINTH
PROJECT NUMBER:	BRO 1447(29)
FILE NAME: ...\drawing\z01j292_abuts.dgn	PLOT DATE: 8/4/2014
PROJECT LEADER: G. BOGUE	DRAWN BY: L. BUXTON
DESIGNED BY: J. HUNGERFORD	CHECKED BY: G. BOGUE
ABUTMENT & WINGWALL SECTIONS	SHEET 39 OF 57

8/4/2014 12:44:4 PM V:\1953\active\195310795\transportation\drawing\z01j292_abuts.dgn

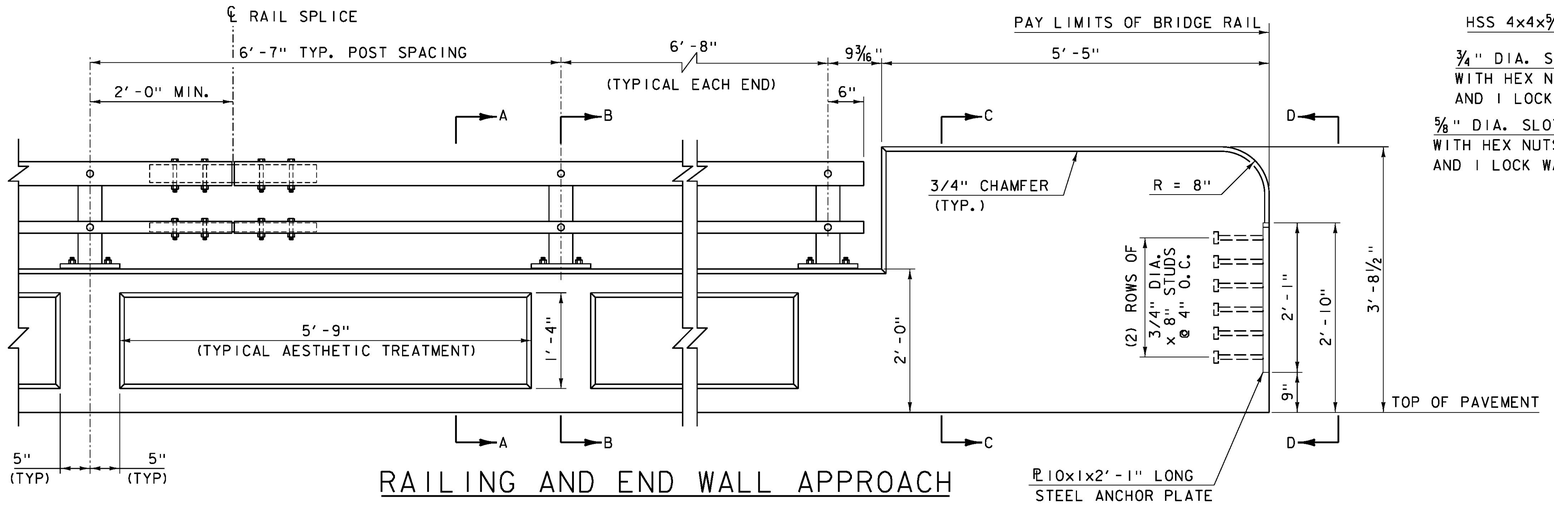

RAILING AND END WALL APPROACH

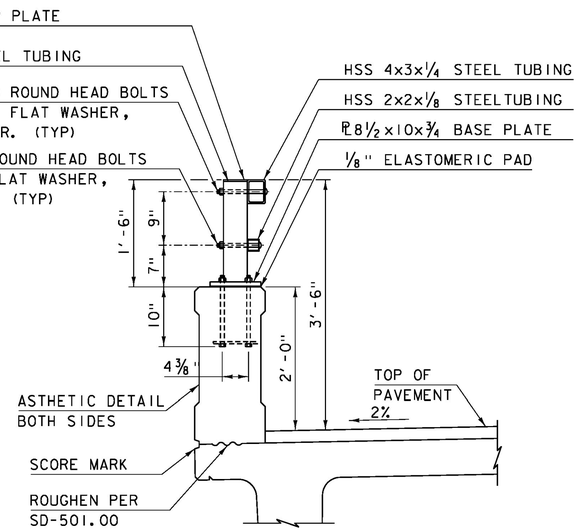

RAIL TYPICAL SECTION

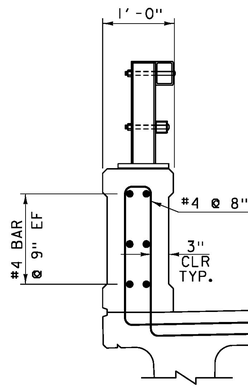

SECTION A-A

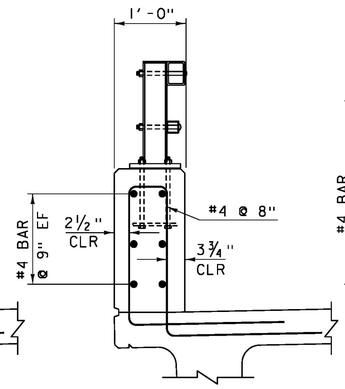

SECTION B-B

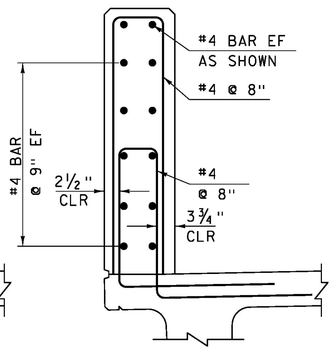

SECTION C-C

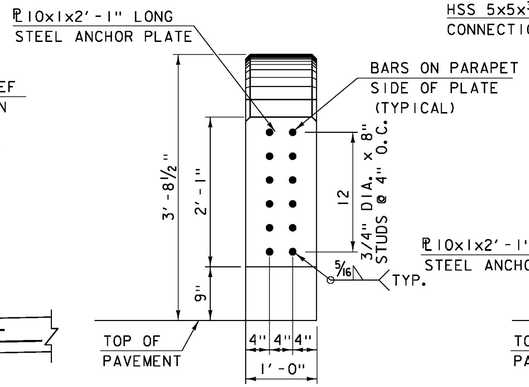

SHOWING EMBEDDED BAR

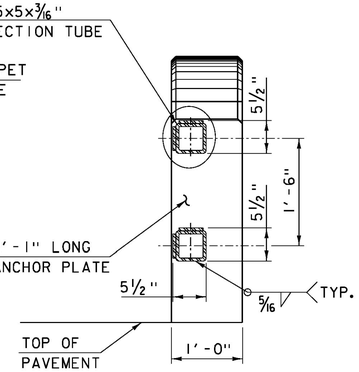

WITH HSS CONNECTOR TUBE

SECTION D-D

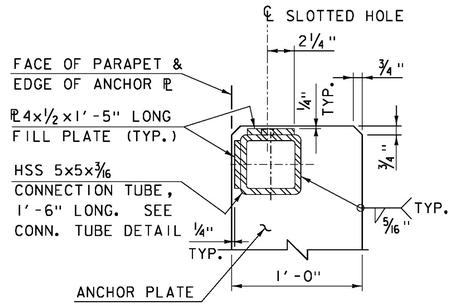

DETAIL B

NOTES:

1. BRIDGE RAIL SHALL HAVE A RUBBED FINISH IN ACCORDANCE WITH SECTION 501.
2. HOLES AND RECESSES ARE TO BE FORMED OR CORED, PERCUSSION DRILLING IS NOT ALLOWED.
3. ALL STEEL COMPONENTS SHALL BE COATED BLACK IN ACCORDANCE WITH ASTM D7803 FOLLOWING GALVANIZING.
4. SEE STANDARD DRAWINGS S-352A, S-352B AND S-352C FOR ADDITIONAL INFORMATION AND REQUIREMENTS.
5. AESTHETIC TREATMENT SHALL BE APPLIED TO BOTH SIDES OF THE RAIL.
6. CONCRETE FOR BRIDGE RAIL SHALL BE CONCRETE, HIGH PERFORMANCE CLASS A AND WILL BE PAID FOR UNDER CONTRACT ITEM 525.45. REINFORCING STEEL SHALL MEET THE REQUIREMENTS OF SECTION 507 FOR LEVEL 1 REINFORCING AND WILL BE INCLUDED IN THE UNIT PRICE BID FOR CONTRACT ITEM 525.45.

8/4/2014

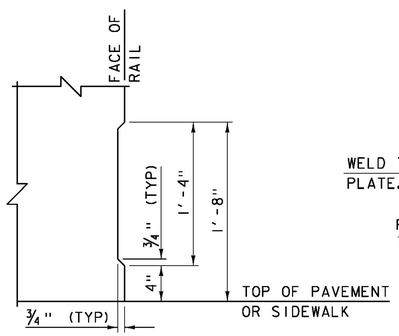

AESTHETIC TREATMENT DETAIL

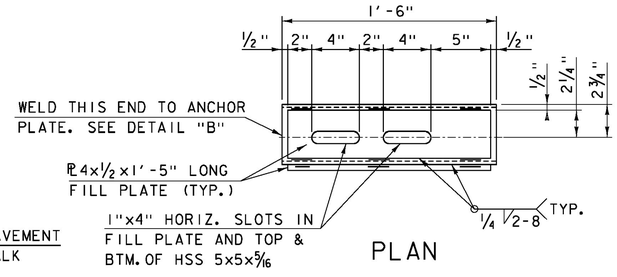

PLAN

CONNECTION TUBE DETAIL

NOTE:

NF = NEAR FACE
FF = FAR FACE
EF = EACH FACE
2'-2" BAR LAP UNLESS OTHERWISE SPECIFIED ON PLANS.

Stantec

PROJECT NAME:	CORINTH
PROJECT NUMBER:	BRO 1447(29)
FILE NAME: ...\z011292_br_app_raildets.dgn	PLOT DATE: 8/4/2014
PROJECT LEADER: G. BOGUE	DRAWN BY: E. ALLING
DESIGNED BY: M. CHENETTE	CHECKED BY: G. BOGUE
BRIDGE RAIL DETAILS 1	SHEET 40 OF 57

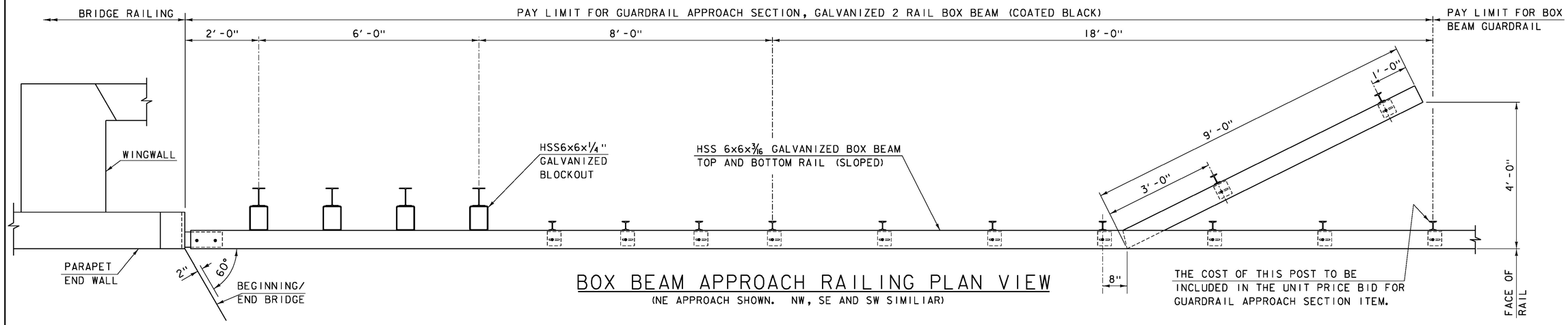

BOX BEAM APPROACH RAILING PLAN VIEW

(NE APPROACH SHOWN. NW, SE AND SW SIMILIAR)

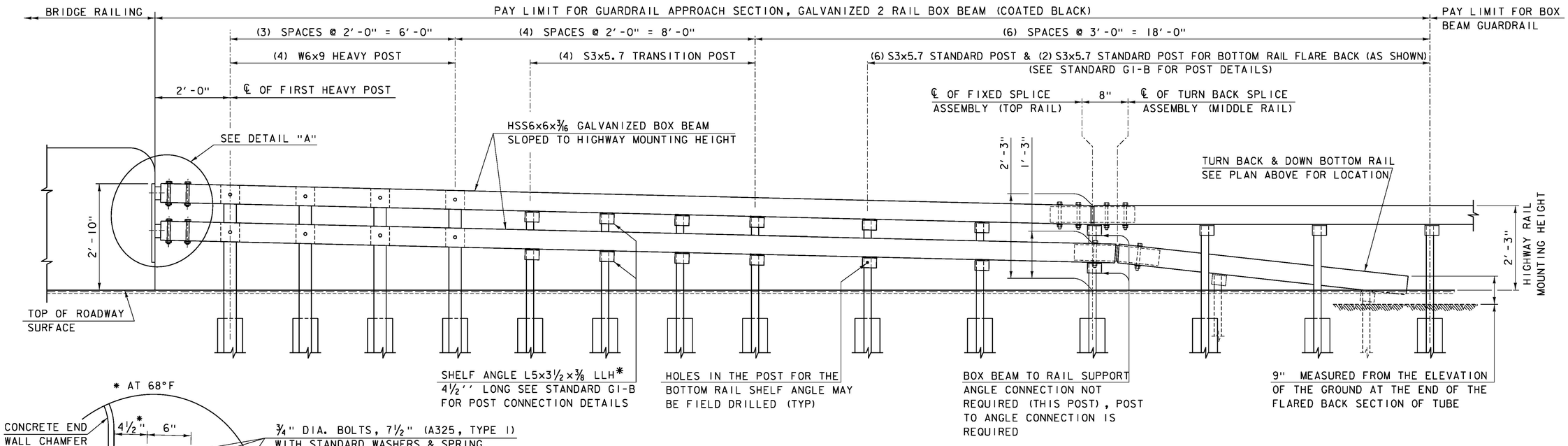

BOX BEAM APPROACH RAILING ELEVATION

*LONG LEG HORIZONTAL

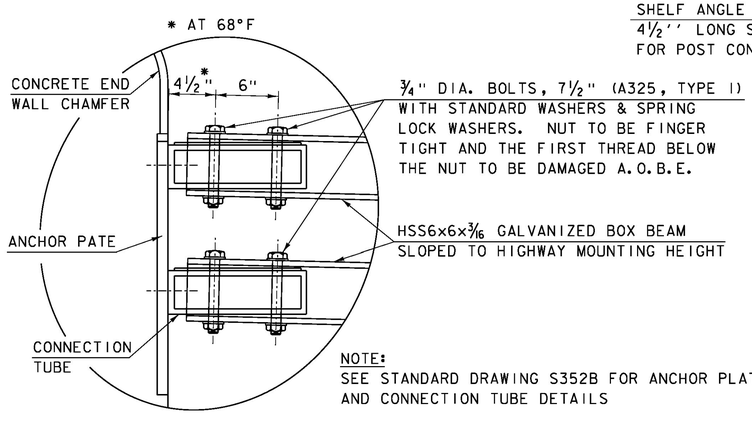

NOTE:
SEE STANDARD DRAWING S352B FOR ANCHOR PLATE AND CONNECTION TUBE DETAILS

DETAIL A

NOTE:
ALL STEEL COMPONENTS TO BE PAINTED BLACK

Stantec

PROJECT NAME: CORINTH	
PROJECT NUMBER: BRO 1447(29)	
FILE NAME: ...\z011292_br_app_raildets.dgn	PLOT DATE: 8/4/2014
PROJECT LEADER: G. BOGUE	DRAWN BY: E. ALLING
DESIGNED BY: M. CHENETTE	CHECKED BY: G. BOGUE
APPROACH RAIL DETAILS	SHEET 41 OF 57

STATE OF VERMONT
AGENCY OF TRANSPORTATION

REINFORCING STEEL SCHEDULE

ITEM	EACH	SIZE	LENGTH	MARK	TYPE	A	B	C	D	E	F	G	H	J	K	R	O
ABUTMENT NO. 1																	
	22	5	21'- 6"	1A501	STR												
	38	5	6'- 8"	1A502	17		---	5'- 9"	0'- 11"								
	31	5	4'- 4"	1A503	STR												
	31	5	5'- 11"	1A504	STR												
	32	5	19'- 6"	1A505	STR												
	37	5	7'- 4"	1A506	S10		2'- 8"	2'- 0"	2'- 8"								
	8	5	4'- 0"	1A507	22		2'- 0"	2'- 0"	---				1'- 9"	---	1'- 0"	---	
	8	5	8'- 10"	1A508	22		2'- 0"	4'- 10"	2'- 0"				1'- 9"	1'- 9"	1'- 0"	1'- 0"	
	3	5	4'- 6"	1A509	22		2'- 0"	2'- 6"	---				1'- 9"	---	1'- 0"	---	
	3	5	5'- 4"	1A510	22		2'- 0"	3'- 4"	---				1'- 9"	---	1'- 0"	---	
	8	5	12'- 8"	1A511	22		2'- 0"	8'- 8"	2'- 0"				1'- 0"	1'- 0"	1'- 9"	1'- 9"	
	8	5	4'- 0"	1A512	22		2'- 0"	2'- 0"	---				1'- 10"	---	1'- 0"	---	
	4	5	4'- 9"	1A513	22		---	2'- 9"	2'- 0"				---	1'- 9"	---	1'- 0"	
	4	5	5'- 2"	1A514	22		---	3'- 2"	2'- 0"				---	1'- 9"	---	1'- 0"	
	7	5	7'- 10"	1A515	STR												
	5	5	9'- 5"	1A516	STR												
	2	5	6'- 7"	1A517	STR												
	3	5	5'- 11"	1A518	STR												
	33	6	7'- 0"	1A601	STR												
	41	6	6'- 1"	1A602	17		---	4'- 3"	1'- 10"								
	67	8	3'- 6"	1A801	STR												
ABUTMENT NO. 2																	
	22	5	21'- 0"	2A501	STR												
	38	5	6'- 8"	2A502	17		---	5'- 9"	0'- 11"								
	31	5	5'- 0"	2A503	STR												
	31	5	6'- 6"	2A504	STR												
	32	5	19'- 6"	2A505	STR												
	37	5	7'- 4"	2A506	S10		2'- 8"	2'- 0"	2'- 8"								
	8	5	4'- 0"	2A507	22		2'- 0"	2'- 0"	---				1'- 9"	---	1'- 0"	---	
	8	5	8'- 10"	2A508	22		2'- 0"	4'- 10"	2'- 0"				1'- 9"	1'- 9"	1'- 0"	1'- 0"	
	4	5	4'- 6"	2A509	22		2'- 0"	2'- 6"	---				1'- 9"	---	1'- 0"	---	
	4	5	5'- 4"	2A510	22		2'- 0"	3'- 4"	---				1'- 9"	---	1'- 9"	---	
	8	5	12'- 8"	2A511	22		2'- 0"	8'- 8"	2'- 0"				1'- 0"	1'- 0"	1'- 9"	1'- 9"	
	8	5	4'- 0"	2A512	22		2'- 0"	2'- 0"	---				1'- 10"	---	1'- 0"	---	
	3	5	4'- 9"	2A513	22		---	2'- 9"	2'- 0"				---	1'- 9"	---	1'- 0"	
	3	5	5'- 2"	2A514	22		---	3'- 2"	2'- 0"				---	1'- 9"	---	1'- 0"	
	7	5	8'- 6"	2A515	STR												
	5	5	10'- 0"	2A516	STR												
	2	5	6'- 6"	2A517	STR												
	3	5	7'- 2"	2A518	STR												
	33	6	7'- 0"	2A601	STR												
	41	6	6'- 1"	2A602	17		---	4'- 3"	1'- 10"								
	41	8	3'- 6"	2A801	STR												
WINGWALL NO. 1																	
	39	5	35'- 2"	1W501	STR												
	96	5	5'- 9"	1W502	17		---	3'- 9"	2'- 0"								
	96	5	9'- 10"	1W503	STR												
	96	5	9'- 2"	1W504	STR												
	60	5	33'- 5"	1W505	STR												
	96	5	4'- 9"	1W506	S10		2'- 0"	0'- 9"	2'- 0"								
	98	6	9'- 0"	1W601	STR												
	96	6	5'- 6"	1W602	17		---	4'- 6"	1'- 0"								
WINGWALL NO. 2																	
▲	10	5	13'- 4"	2W501	STR												
	11	5	4'- 8"	2W502	17		---	3'- 9"	1'- 0"								
	11	5	9'- 7"	2W503	STR												
	9	5	7'- 7"	2W504	STR												
	20	5	10'- 8"	2W505	STR												
	11	5	5'- 5"	2W506	S10		2'- 4"	0'- 9"	2'- 4"								
	11	6	7'- 0"	2W601	STR												
	9	7	6'- 11"	2W701	17		---	5'- 9"	1'- 2"								
WINGWALL NO. 3																	
	20	5	20'- 11"	3W501	STR												
	42	5	4'- 9"	3W502	17		---	3'- 9"	1'- 0"								
	42	5	10'- 6"	3W503	STR												
	39	5	8'- 6"	3W504	STR												
	22	5	40'- 8"	3W505	STR												
	42	5	5'- 7"	3W506	S10		2'- 5"	0'- 9"	2'- 5"								
▲	42	6	7'- 0"	3W601	STR												
	39	7	6'- 11"	3W701	17		---	5'- 9"	1'- 2"								
WINGWALL NO. 4																	
	10	5	15'- 7"	4W501	STR												
	15	5	4'- 9"	4W502	17		---	3'- 9"	1'- 0"								
	15	5	10'- 6"	4W503	STR												
	13	5	8'- 6"	4W504	STR												
	22	5	14'- 8"	4W505	STR												
	15	5	4'- 11"	4W506	S10		2'- 1"	0'- 9"	2'- 1"								
	16	6	7'- 0"	4W601	STR												
	13	7	6'- 11"	4W701	17		---	5'- 9"	1'- 2"								

~ NOTES ~

1. UNLESS OTHERWISE DESIGNATED, ALL BAR REINFORCEMENT FOR CONCRETE IN SIZES UP TO AND INCLUDING NO. 18 SHALL CONFORM TO THE REQUIREMENTS OF THE "SPECIFICATIONS FOR DEFORMED BILLET-STEEL BARS FOR CONCRETE REINFORCEMENT", AASHTO M 31 (ASTM A 615-SI). ALL BARS SHALL BE GRADE 60, UNLESS OTHERWISE DESIGNATED.
2. FOR TYPICAL BENDING DETAILS, RECOMMENDED PIN DIAMETER "D" OF BENDS AND HOOKS, AND OTHER STANDARD PRACTICE, SEE CURRENT CONCRETE REINFORCING STEEL INSTITUTE "MANUAL OF STANDARD PRACTICE".
3. BARS WHICH REQUIRE MORE ACCURATE BENDING THAN STANDARD PRACTICES SHOULD HAVE LIMITS INDICATED.
4. ALL DIMENSIONS ARE OUT TO OUT OF BAR EXCEPT "A" AND "G" ON STANDARD 180 DEGREE AND 135 DEGREE HOOKS.
5. "J" DIMENSION ON 180 DEGREE HOOKS TO BE SHOWN ONLY WHERE NECESSARY TO RESTRICT HOOK SIZE. OTHERWISE, STANDARD HOOKS ARE TO BE USED.
6. "H" DIMENSION ON STIRRUPS TO BE SHOWN ONLY WHEN NECESSARY TO MAINTAIN CLEARANCES.
7. WHERE SLOPE DIFFERS FROM 45 DEGREES, DIMENSIONS "H" AND "K" MUST BE SHOWN.
8. ▲ DENOTES BARS TO BE CUT IN FIELD.
9. ✳ DENOTES ONE EXTRA BAR ADDED FOR TESTING PURPOSES.
10. △ DENOTES TWO EXTRA BARS ADDED FOR TESTING PURPOSES.
11. E IN BAR MARK PREFIX DENOTES EPOXY COATED REINFORCING STEEL.

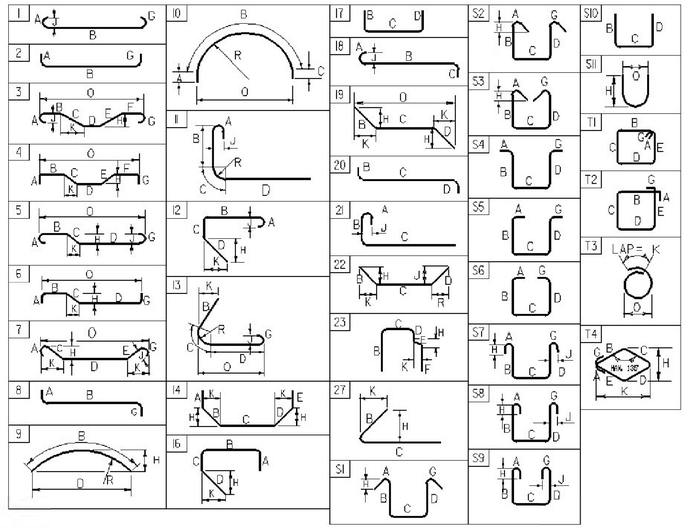

ASTM STANDARD REINFORCING BARS

BAR SIZE DESIGNATION	WEIGHT POUNDS PER FOOT	NOMINAL DIMENSIONS ROUND SECTION		
		DIAMETER INCHES	AREA INCHES^2	PERIMETER INCHES
#3	0.376	0.375	0.11	1.178
#4	0.668	0.500	0.20	1.571
#5	1.043	0.625	0.31	1.963
#6	1.502	0.750	0.44	2.356
#7	2.044	0.875	0.60	2.749
#8	2.670	1.000	0.79	3.142
#9	3.400	1.128	1.00	3.544
#10	4.303	1.270	1.27	3.990
#11	5.313	1.410	1.56	4.430
#14	7.65	1.693	2.25	5.32
#18	13.60	2.257	4.00	7.09

PROJECT NAME: **CORINTH**
PROJECT NUMBER: **BRO 1447(29)**

FILE NAME:
PROJECT MANAGER: **M. Chenette**
DESIGNED BY: **M. Chenette**
REINFORCING STEEL SCHEDULE

PLOT DATE: **7/7/2014**
DRAWN BY: **L. Buxton**
CHECKED BY: **J. Hungerford**
SHEET 42 OF 57

BEGIN PROJECT
STA. 100+80.00

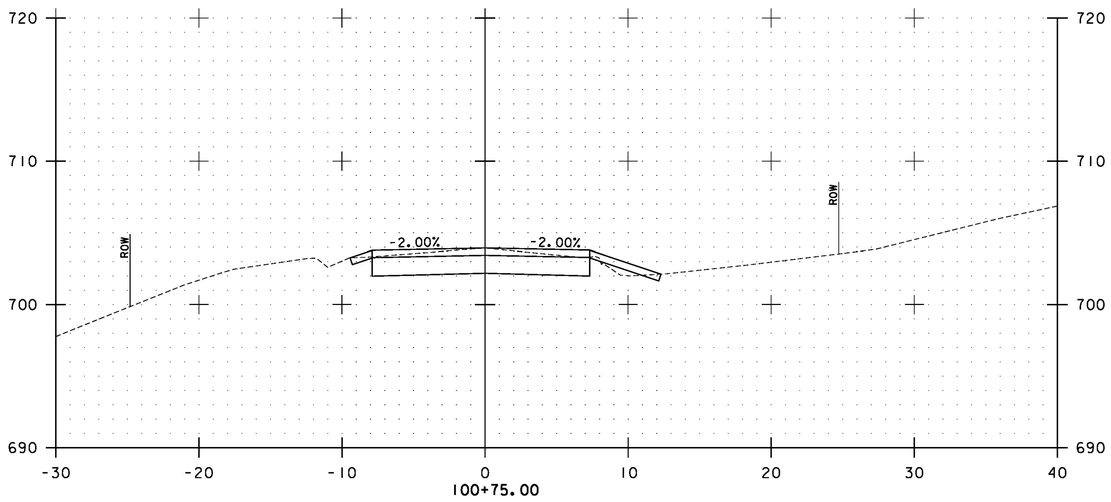

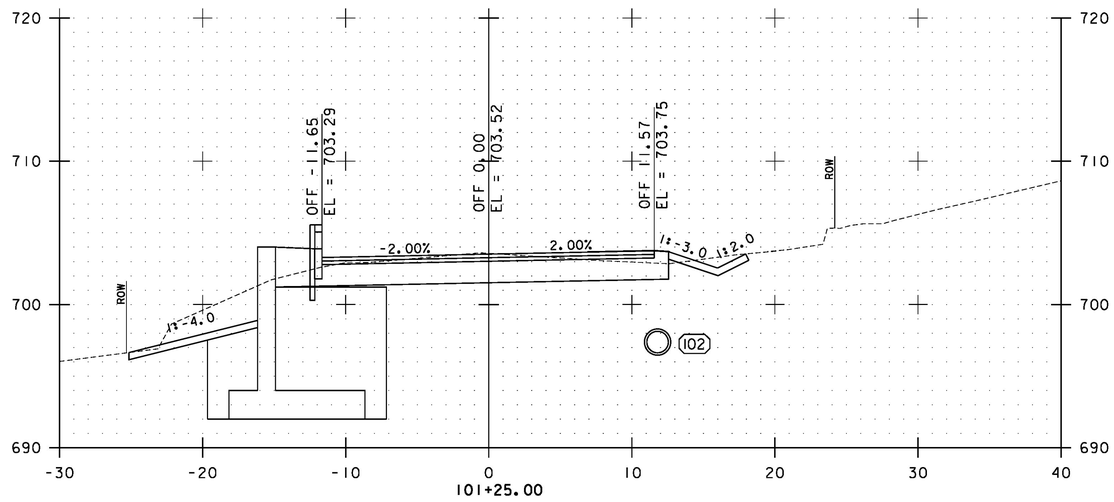

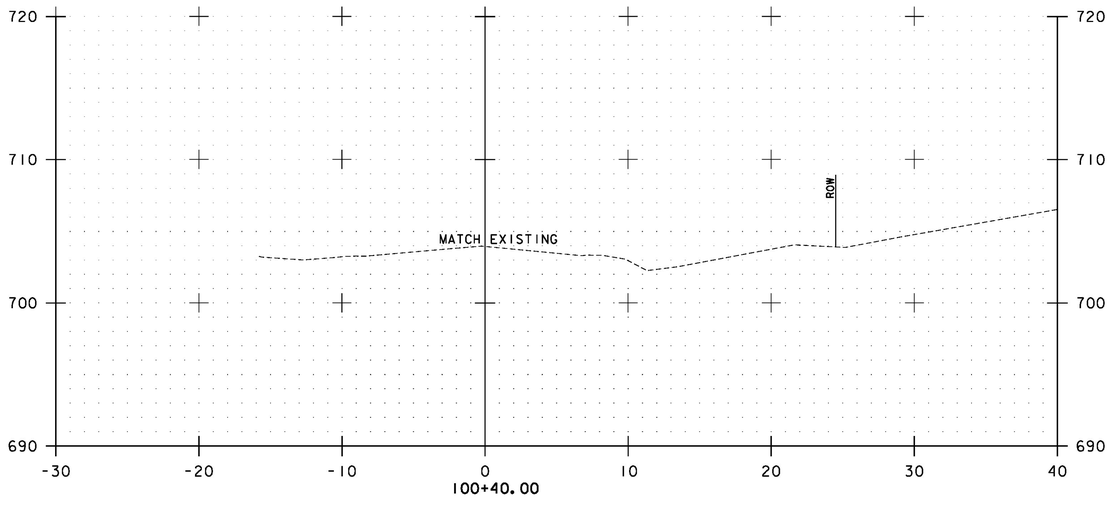

BEGIN APPROACH
STA. 100+30.00

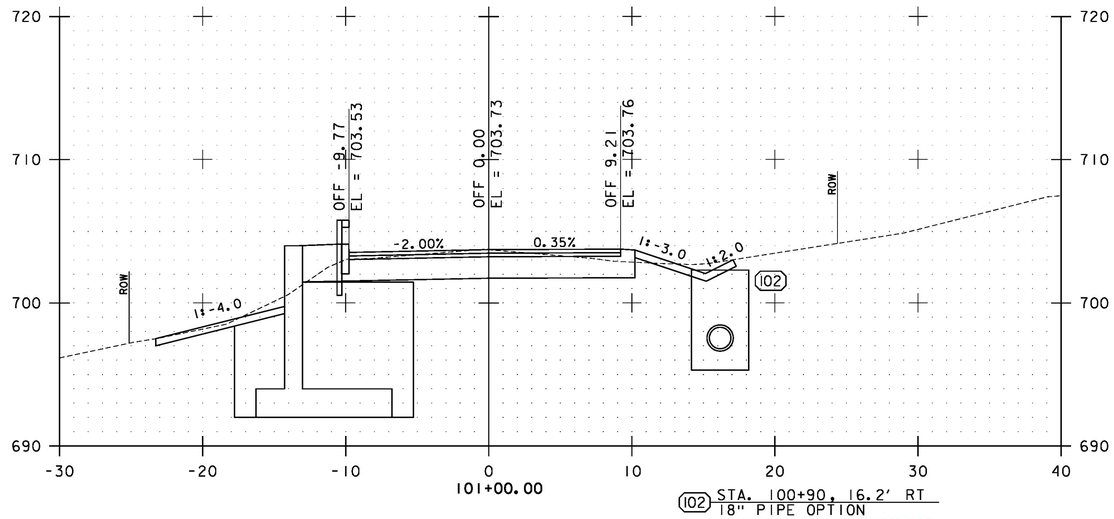

(102) STA. 100+90, 16.2' RT
18" PIPE OPTION
INV EL. = ~~696.80~~ 697.00'
DI INLET
GRATE EL. = ~~702.30~~ 702.40'

STA. 100+40.00 TO STA. 101+25.00

0 5 10
SCALE: 1"=5'

Stantec

PROJECT NAME:	CORINTH
PROJECT NUMBER:	BRO 1447(29)

FILE NAME: ...\drawing\z01j292_xs.dgn	PLOT DATE: 8/4/2014
PROJECT LEADER: G. BOGUE	DRAWN BY: E. ALLING
DESIGNED BY: M. CHENETTE	CHECKED BY: G. BOGUE
ROADWAY CROSS SECTIONS - RXS 1	SHEET 43 OF 57

8/4/2014 12:44:40 PM V:\1953\active\195310795\transportation\drawing\z01j292_xs.dgn

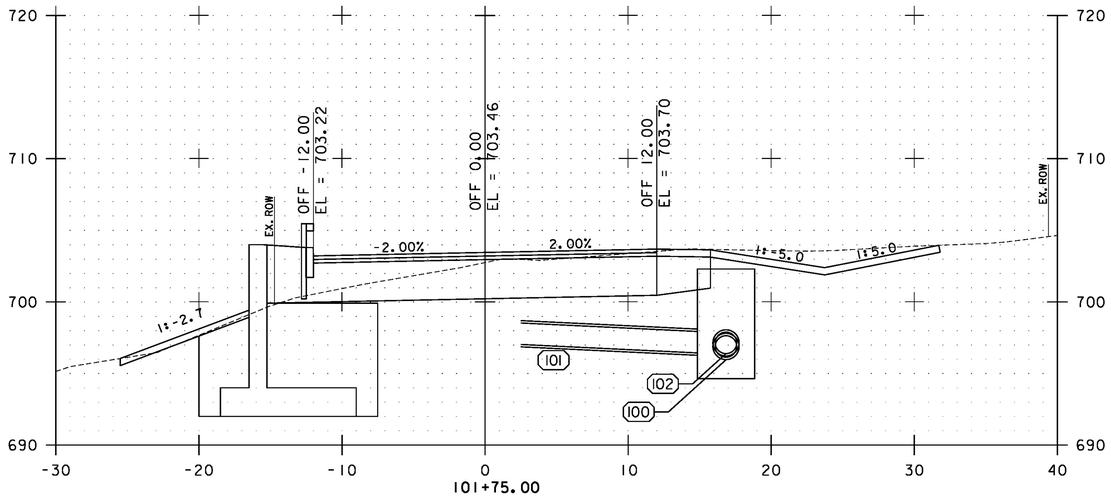

101+75.00

100 STA. 101+67, 16.8' RT
18" PIPE OPTION
INV EL. = 696.14'
DI INLET
GRATE EL. = 702.31'

101 STA. 101+67, 16.8' RT
18" PIPE OPTION
INV EL. = 696.39'

102 STA. 101+67, 16.8' RT
18" PIPE OPTION
INV EL. = 696.39'

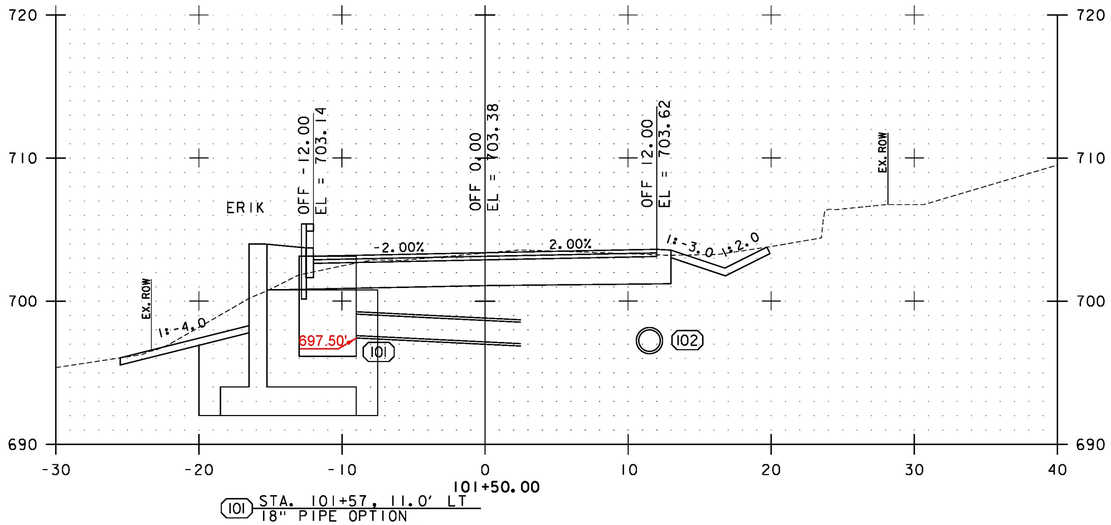

101+50.00

101 STA. 101+57, 11.0' LT
18" PIPE OPTION
INV EL. = ~~696.80'~~
DI INLET 697.50'
GRATE EL. = 703.14'
USE ECCENTRIC CONE TO
AVOID CONFLICT WITH
GUARDRAIL POSTS

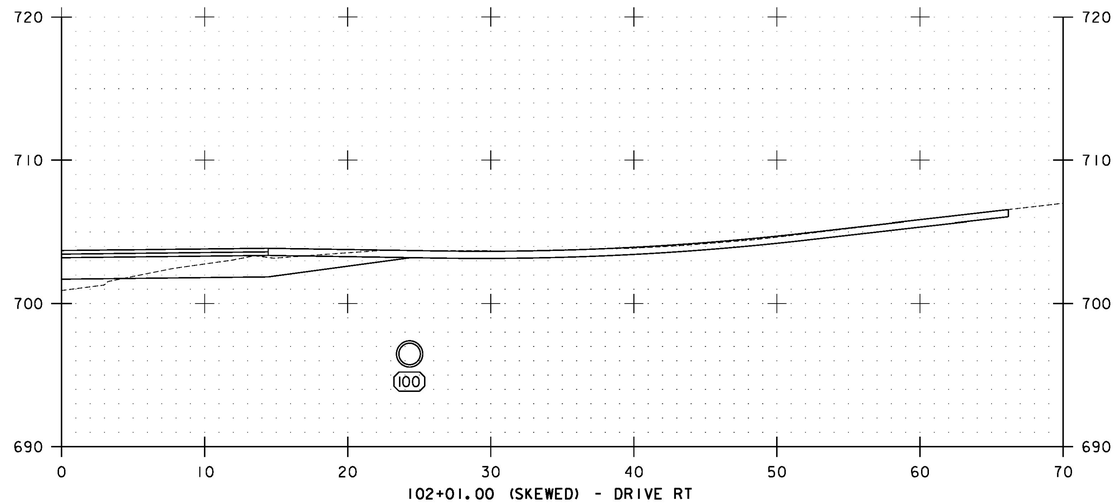

102+01.00 (SKEWED) - DRIVE RT

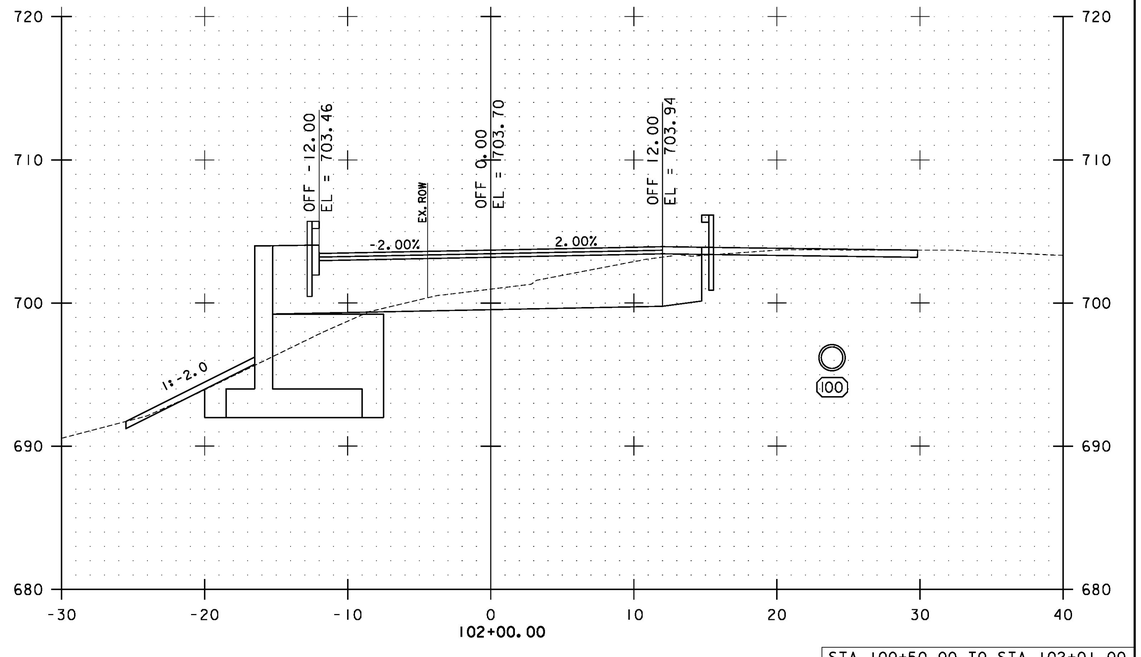

102+00.00

0 5 10
SCALE: 1"=5'

Stantec

STA. 100+50.00 TO STA. 102+01.00

PROJECT NAME: CORINTH
PROJECT NUMBER: BRO 1447(29)

FILE NAME: ...\drawing\z01j292_xs.dgn
PROJECT LEADER: G. BOGUE
DESIGNED BY: M. CHENETTE
ROADWAY CROSS SECTIONS - RXS 2

PLOT DATE: 8/4/2014
DRAWN BY: E. ALLING
CHECKED BY: G. BOGUE
SHEET 44 OF 57

8/4/2014 12:14:40 PM V:\1953\active\195310795\transportation\drawing\z01j292_xs.dgn

END BRIDGE
STA. 102+69.60

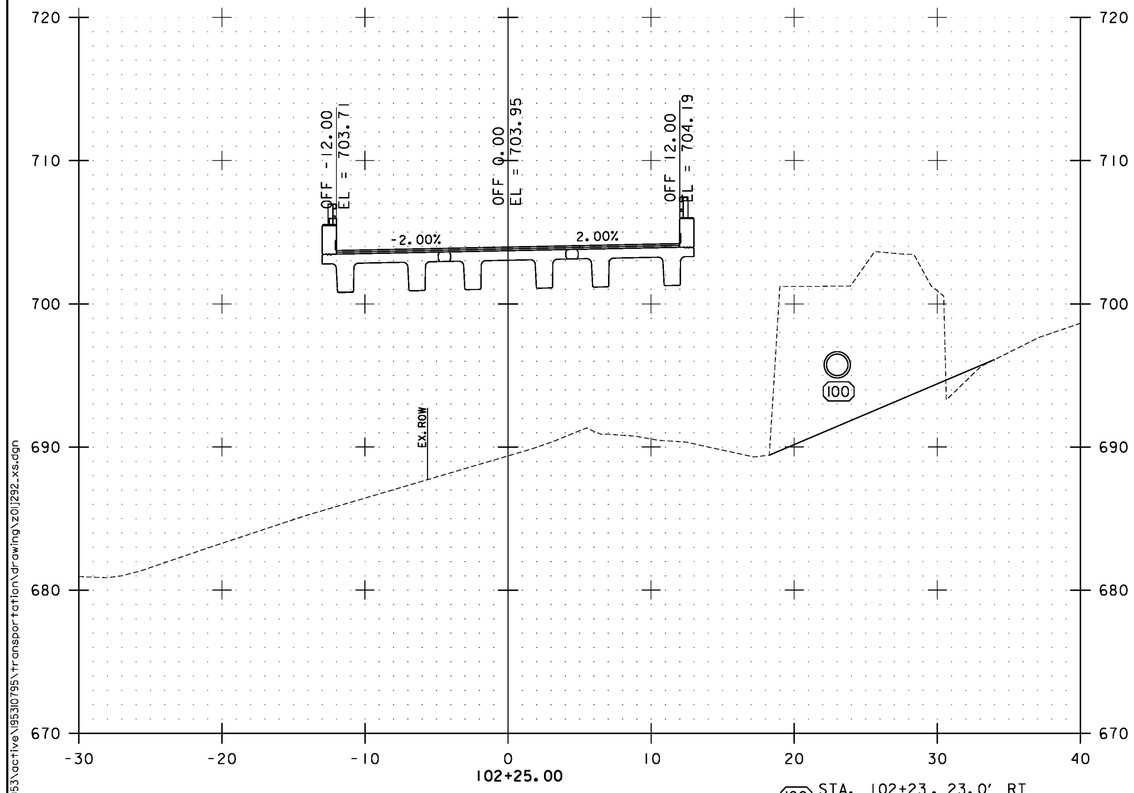

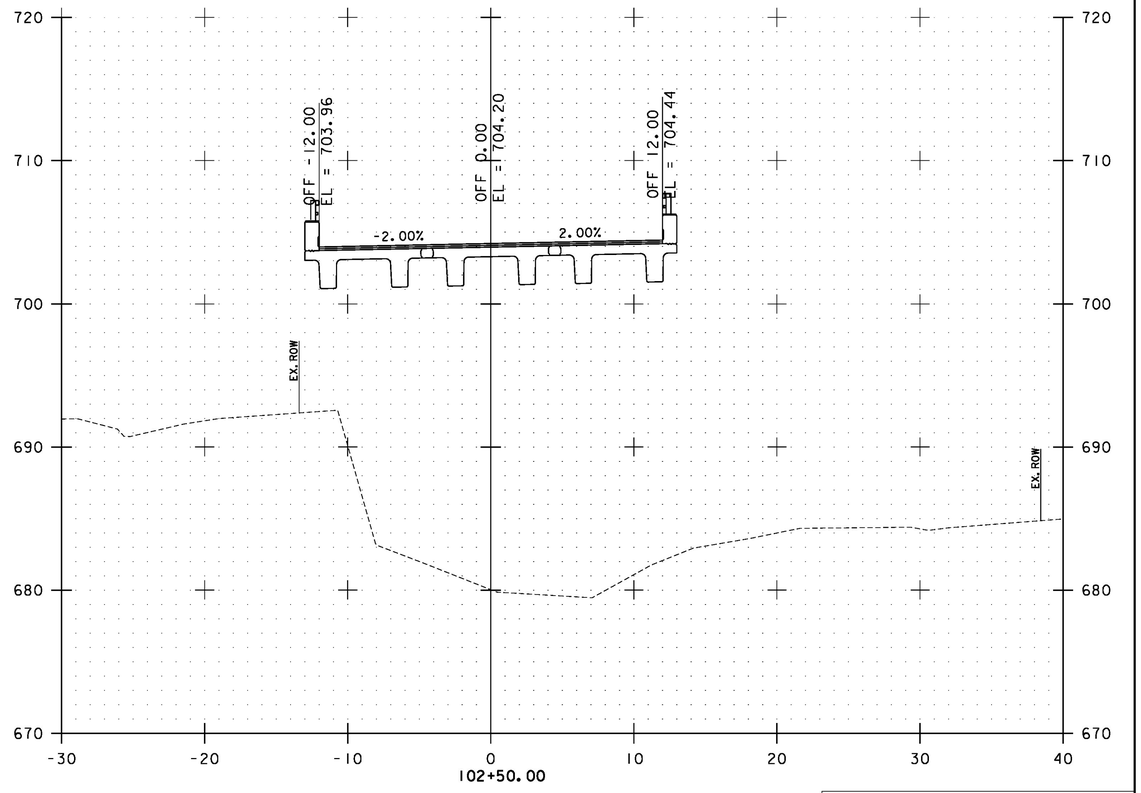

(100) STA. 102+23, 23.0' RT
18" PIPE OPTION
INV EL. = 695.14'

BEGIN BRIDGE
STA. 102+04.40

0 5 10
SCALE: 1"=5'

STA. 102+25.00 TO STA. 102+50.00

Stantec

PROJECT NAME: CORINTH
PROJECT NUMBER: BRO 1447(29)

FILE NAME: ...\drawing\z01j292_xs.dgn
PROJECT LEADER: G. BOGUE
DESIGNED BY: M. CHENETTE
ROADWAY CROSS SECTIONS - RXS 3

PLOT DATE: 8/4/2014
DRAWN BY: E. ALLING
CHECKED BY: G. BOGUE
SHEET 45 OF 57

8/4/2014 12:14:41 PM V:\1953\active\195307951\transportation\drawing\z01j292_xs.dgn

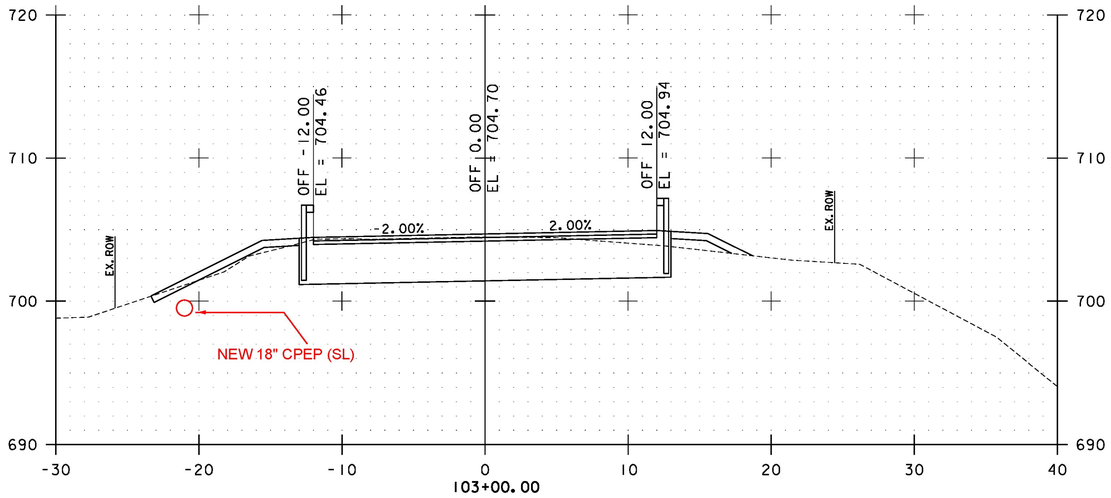

103+00.00

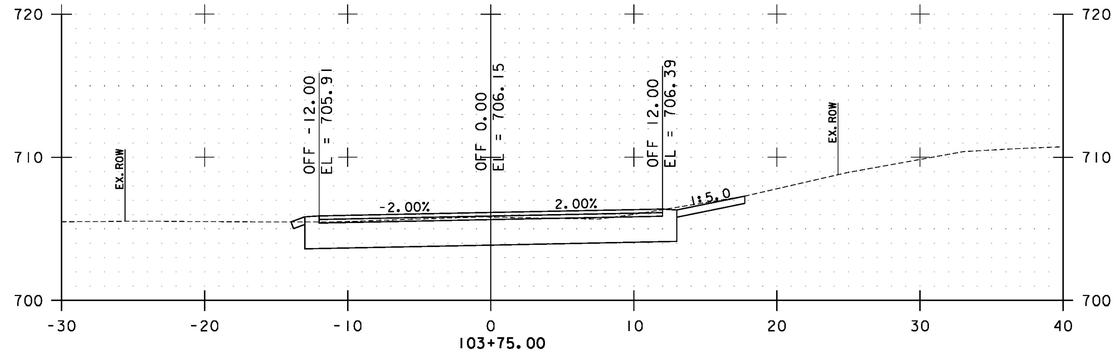

103+75.00

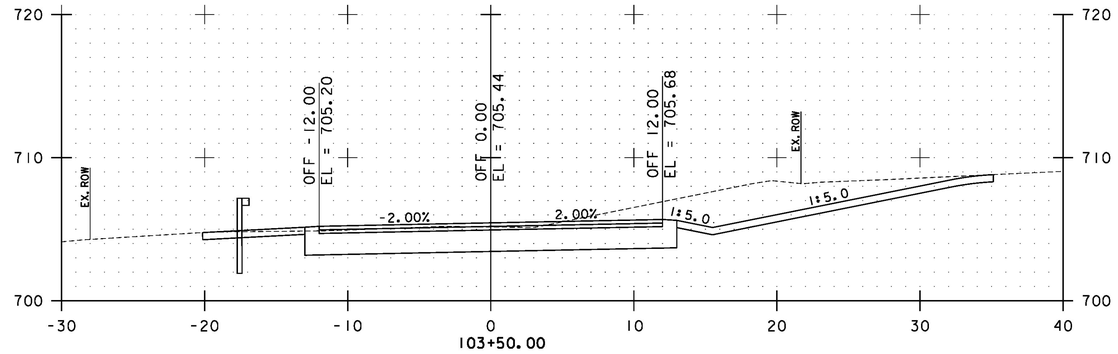

103+50.00

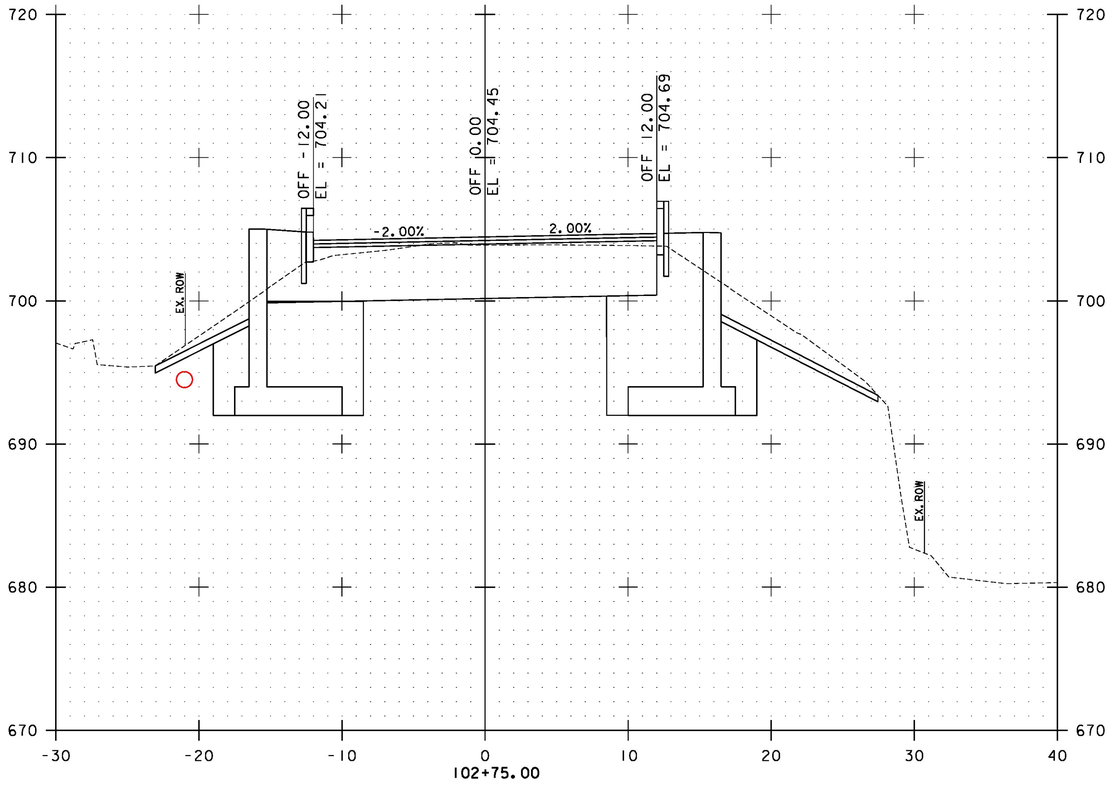

102+75.00

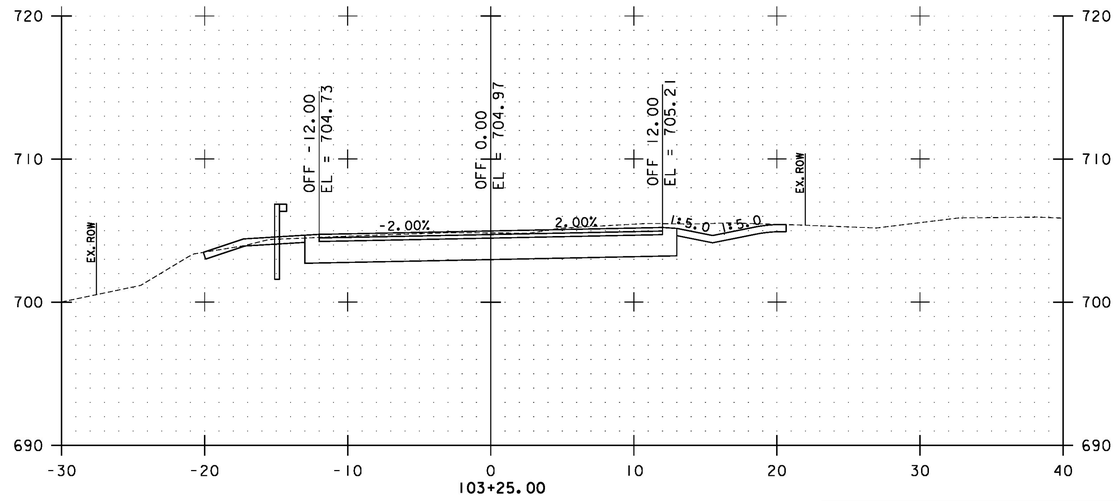

103+25.00

STA. 102+75.00 TO STA. 103+75.00

0 5 10

SCALE: 1"=5'

Stantec

PROJECT NAME:	CORINTH
PROJECT NUMBER:	BRO 1447(29)
FILE NAME: ...\drawing\z01j292_xs.dgn	PLOT DATE: 8/4/2014
PROJECT LEADER: G. BOGUE	DRAWN BY: E. ALLING
DESIGNED BY: M. CHENETTE	CHECKED BY: G. BOGUE
ROADWAY CROSS SECTIONS - RXS 4	SHEET 46 OF 57

8/4/2014 12:14:41 PM V:\1953\active\195301795\transportation\drawing\z01j292_xs.dgn

104+22.94
END PROJECT

MATCH EXISTING

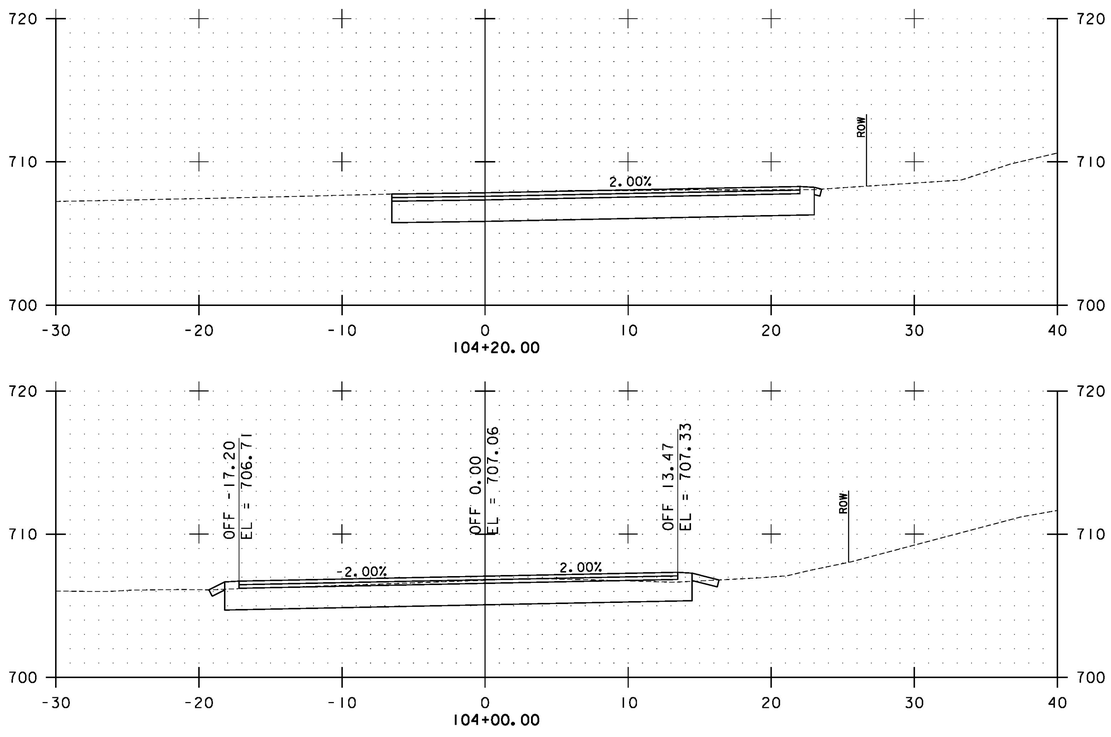

0 5 10

SCALE: 1"=5'

Stantec

STA. 104+00.00 TO STA. 104+20.00

PROJECT NAME: CORINTH
PROJECT NUMBER: BRO 1447(29)

FILE NAME: ...\drawing\z01j292_xs.dgn
PROJECT LEADER: G. BOGUE
DESIGNED BY: M. CHENETTE
ROADWAY CROSS SECTIONS - RXS 5

PLOT DATE: 8/4/2014
DRAWN BY: E. ALLING
CHECKED BY: G. BOGUE
SHEET 47 OF 57

8/4/2014 12:44:12 PM V:\1953\active\195310795\transportation\drawing\z01j292_xs.dgn

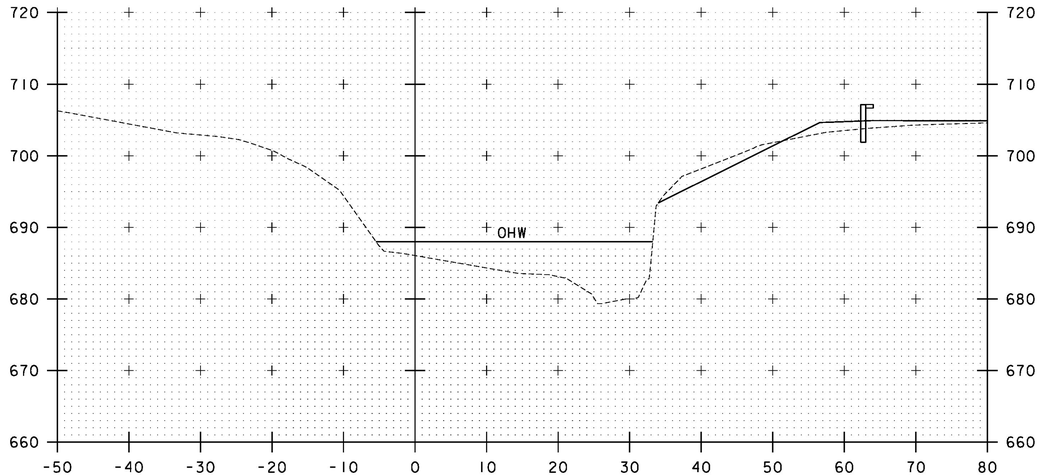

STA. 50+57 RT.
BEGIN UNCLASSIFIED CHANNEL EXCAVATION

50+60

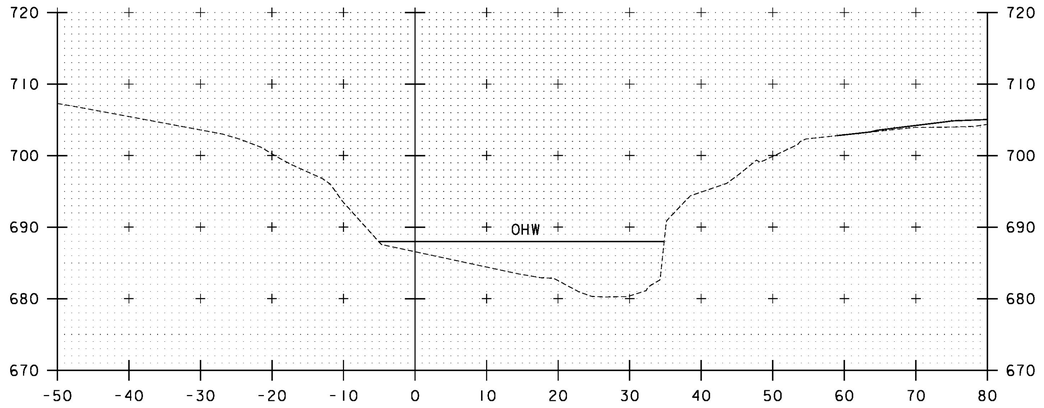

50+50

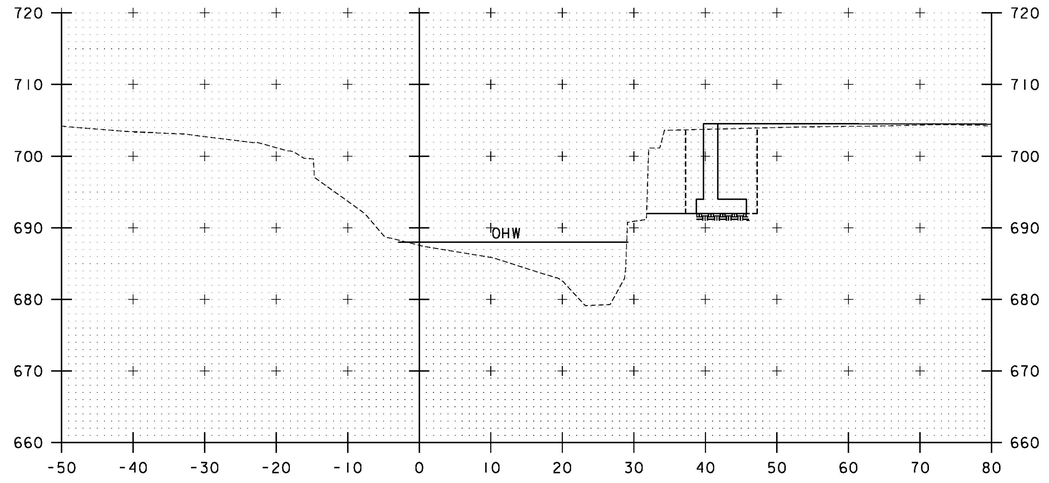

50+80

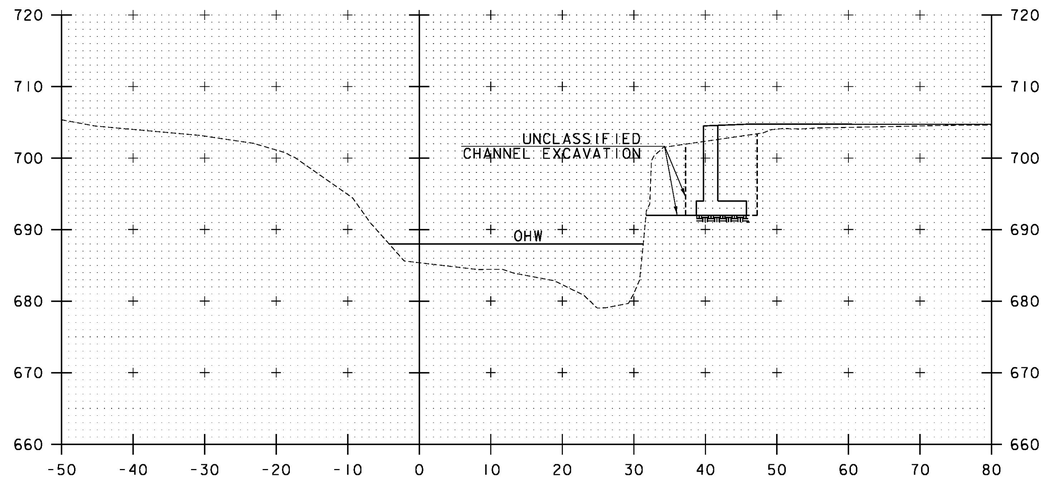

50+70

0 10 20
SCALE: 1"=10'

Stantec

STA. 50+50 TO STA. 50+80

PROJECT NAME: CORINTH
PROJECT NUMBER: BRO 1447(29)

FILE NAME: ...\drawing\z01j292_xs_channel.dgn PLOT DATE: 8/4/2014
PROJECT LEADER: G. BOGUE DRAWN BY: E. ALLING
DESIGNED BY: M. CHENETTE CHECKED BY: G. BOGUE
CHANNEL CROSS SECTIONS – CXS 1 SHEET 48 OF 57

8/4/2014 12:44:43 PM V:\1953\active\195310795\transportation\drawing\z01j292_xs_channel.dgn

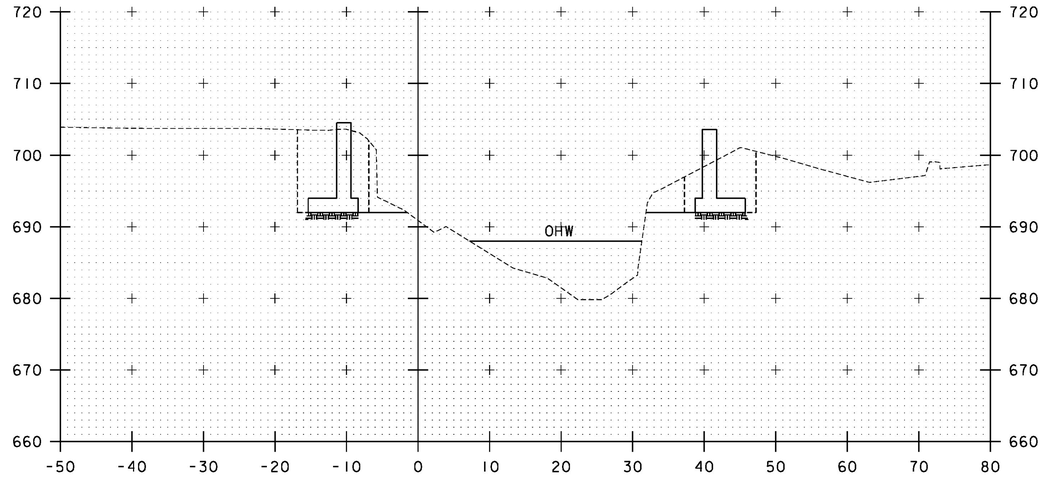

STA. 50+96 LT.
BEGIN UNCLASSIFIED CHANNEL EXCAVATION

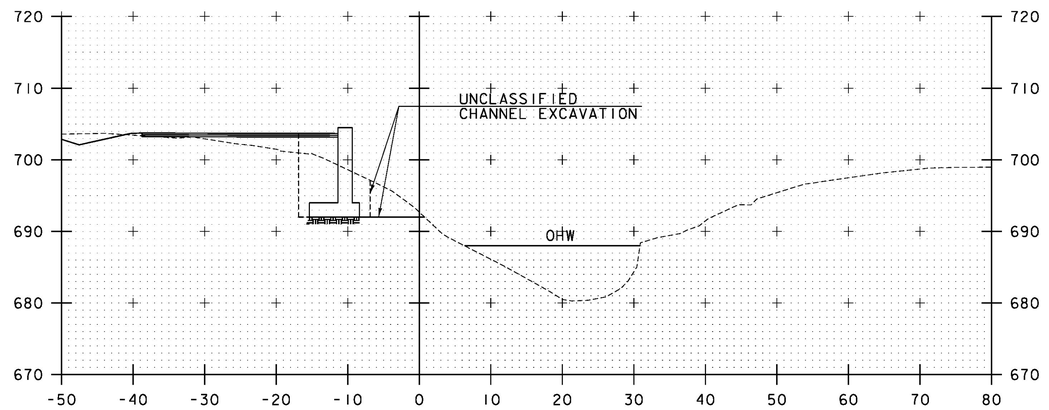

STA. 51+08 RT.
END UNCLASSIFIED CHANNEL EXCAVATION

51+00

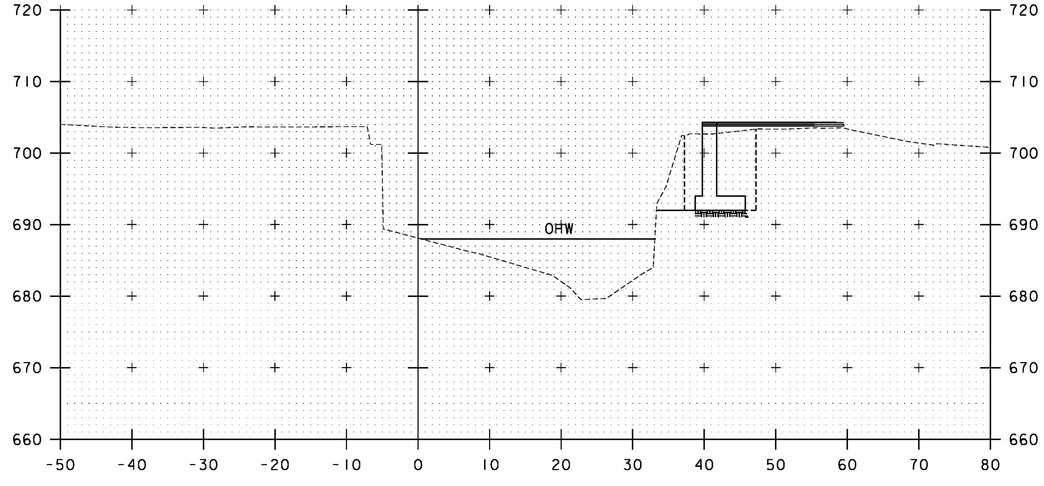

51+20

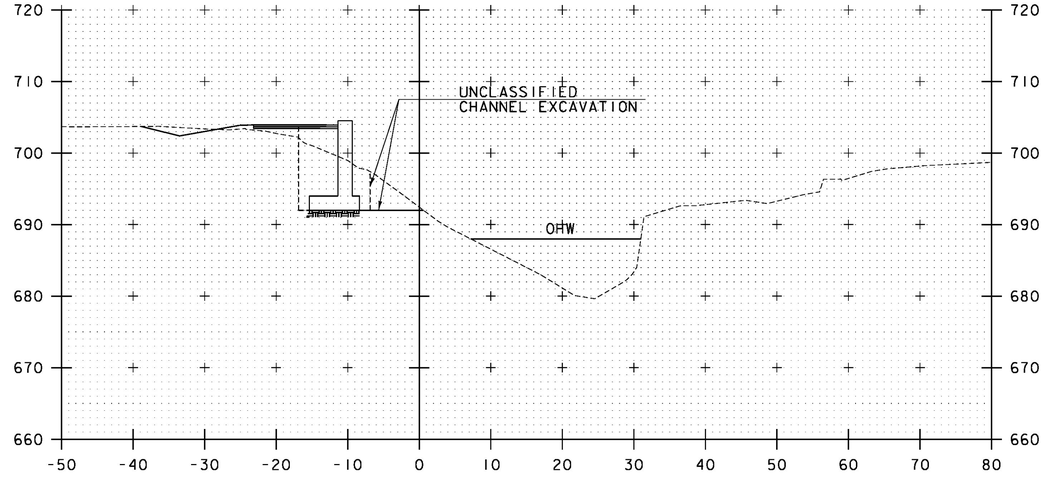

50+90

51+10

0 10 20
SCALE: 1"=10'

STA. 50+90 TO STA. 51+20

PROJECT NAME: CORINTH
PROJECT NUMBER: BRO 1447(29)

FILE NAME: ...\drawing\z01j292_xs_channel.dgn PLOT DATE: 8/4/2014
PROJECT LEADER: G. BOGUE DRAWN BY: E. ALLING
DESIGNED BY: M. CHENETTE CHECKED BY: G. BOGUE
CHANNEL CROSS SECTIONS - CXS 2 SHEET 49 OF 57

Stantec

8/4/2014 12:44:44 PM V:\1953\active\195310795\transportation\drawing\z01j292_xs_channel.dgn

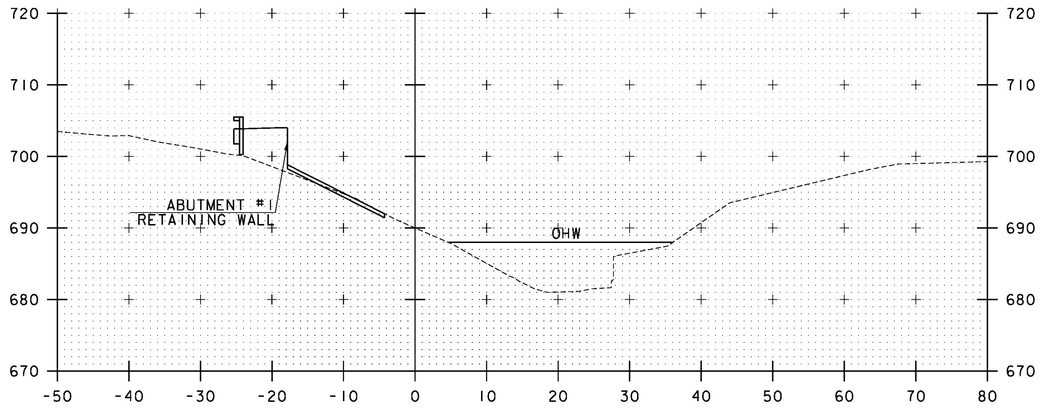

51+40

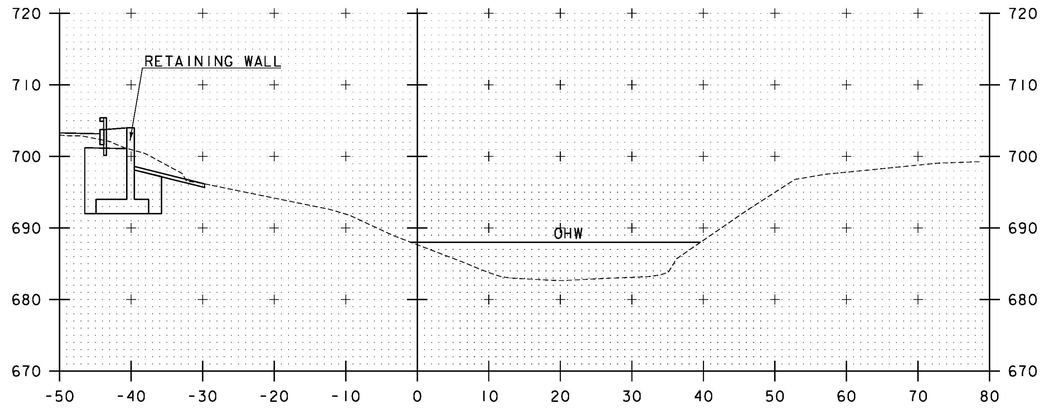

51+67

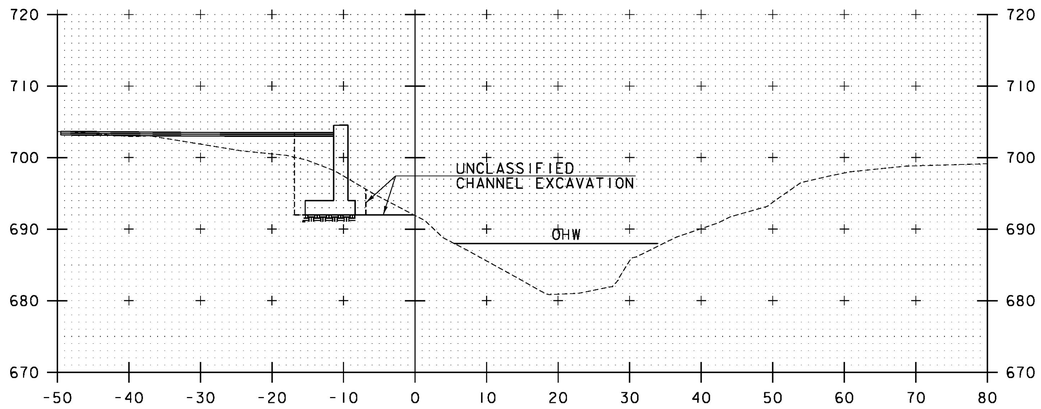

51+30

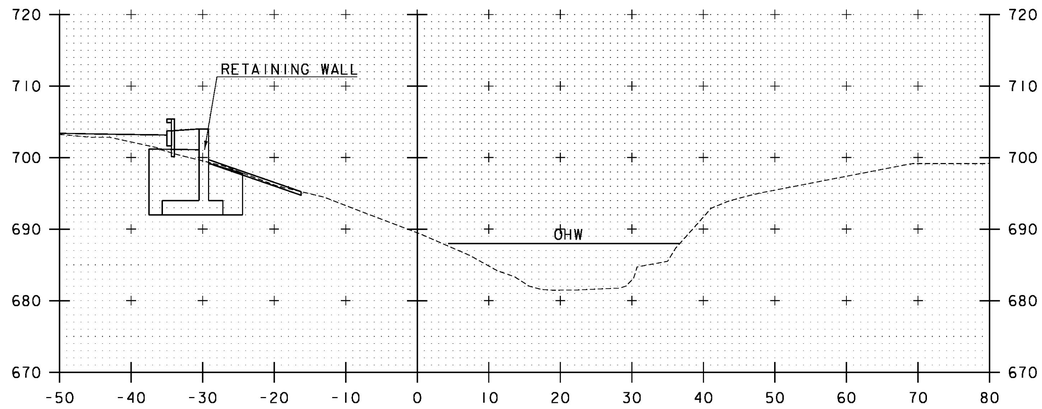

STA. 51+42.33 LT.
END UNCLASSIFIED CHANNEL EXCAVATION

51+50

0 10 20
SCALE: 1"=10'

Stantec

STA. 51+30 TO STA. 51+67

PROJECT NAME: CORINTH
PROJECT NUMBER: BRO 1447(29)

FILE NAME: ...\drawing\z01j292_xs_channel.dgn PLOT DATE: 8/4/2014
PROJECT LEADER: G. BOGUE DRAWN BY: E. ALLING
DESIGNED BY: M. CHENETTE CHECKED BY: G. BOGUE
CHANNEL CROSS SECTIONS - CXS 3 SHEET 50 OF 57

8/4/2014 12:14:44 PM V:\1953\active\195301795\transportation\drawing\z01j292_xs_channel.dgn

EPSC PLAN NARRATIVE

1.1 PROJECT DESCRIPTION

THIS PROJECT INVOLVES THE REPLACEMENT OF BRIDGE #36, RELATED ROADWAY APPROACH AND CHANNEL WORK AND INCIDENTALS. BRIDGE #36 WILL BE REPLACED WITH A PRECAST CONCRETE BRIDGE OVER TABOR BRANCH, ON NEW FOOTINGS AND ON A NEW ALIGNMENT. BRIDGE #36 IS LOCATED IN THE TOWN OF CORINTH, CHICKEN FARM ROAD (T.H. 16), AT THE INTERSECTION WITH EAST CORINTH ROAD (T.H. 1). THE LENGTH OF THE BRIDGE WILL BE INCREASED TO 65 FEET.

NOTE: AREA OF DISTURBANCE INCLUDES LIMITS OF EARTH DISTURBANCE WITHIN THE PROJECT AREA, AS WELL AS WASTE, BORROW AND STAGING AREAS, AND OTHER EARTH DISTURBING ACTIVITIES WITHIN OR DIRECTLY ADJACENT TO THE PROJECT LIMITS AS SHOWN ON THE ATTACHED EPSC PLAN.

TOTAL AREA OF DISTURBANCE AS SHOWN ON THE ATTACHED EPSC PLAN IS APPROXIMATELY 0.55 ACRES.

IT IS ANTICIPATED THAT THIS PROJECT WILL LAST ONE CONSTRUCTION SEASON.

1.2 SITE INVENTORY

1.2.1 TOPOGRAPHY

THE TOPOGRAPHY OF THE IMMEDIATE PROJECT AREA IS RELATIVELY FLAT AND FEATURES GRASSED LAWN AREAS, UNDERGROWTH ALONG BOTH BANKS OF TABOR BRANCH AND SMALL TO MEDIUM-SIZED TREES. EAST CORINTH ROAD AND TABOR BRANCH ROAD ARE WITHIN THE PROJECT SITE. THERE ARE THREE HOUSES ADJACENT TO THE SITE, AND SEVERAL ADDITIONAL HOUSES ALONG BOTH CHICKEN FARM AND EAST CORINTH ROADS.

1.2.2 DRAINAGE, WATERWAYS, BODIES OF WATER, AND PROXIMITY TO NATURAL OR MAN-MADE WATER FEATURES

THE TABOR BRANCH IS THE ONLY WATER SOURCE ON THE PROJECT SITE. THE TABOR BRANCH IS CLASSIFIED AS STRAIGHT AND NARROW, WITH A CONFINED CHANNEL THAT CUTS THROUGH LEDGE AT THE SITE. THE STREAM BED CONSISTS OF FINES, GRAVEL, COBBLES AND BOULDERS. DUE TO THE NATURE OF THE SURROUNDING TERRAIN THE PROJECT SITE COULD RECEIVE RUNOFF WATER FROM A FEW NEARBY SLOPES.

1.2.3 VEGETATION

THE VEGETATION IN THE PROJECT AREA CONSISTS OF OPEN GRASSED AREAS, HARDWOOD TREES AND UNDERGROWTH. THE IMPACT TO VEGETATION WILL BE LIMITED TO THE PROPOSED TOE OF SLOPE SHOWN ON THE PLANS. THE CHANNEL WILL NOT BE AFFECTED BY CONSTRUCTION. DISTURBED VEGETATION WILL BE REESTABLISHED WITH STANDARD SEED AND MULCH PRACTICES.

1.2.4 SOILS

ALL SOIL DATA CAME FROM THE U.S. DEPARTMENT OF AGRICULTURE SOIL CONSERVATION SERVICE FOR THE COUNTY OF FRANKLIN, VERMONT. SOILS ON THE PROJECT SITE ARE THE WESTERLY BANK FEATURES AGAWAM FINE SANDY LOAM, “K FACTOR” = 0.28 AND THE EASTERLY BANK CONSISTS OF WINDSOR LOAMY FINE SAND, “K FACTOR” = 0.17. THE AGAWAM FINE SANDY LOAM IS CONSIDERED MODERATELY ERODIBLE DUE TO K-VALUE WHILE THE WINDSOR LOAMY FINE SAND IS CONSIDERED TO HAVE LOW EROSION POTENTIAL.

NOTE: K-VALUES GENERALLY INDICATE THE FOLLOWING:
0.0-0.23 = LOW EROSION POTENTIAL
0.24-0.36 = MODERATE EROSION POTENTIAL
0.37 AND HIGHER = HIGH EROSION POTENTIAL

1.2.5 SENSITIVE RESOURCE AREAS

CRITICAL HABITATS: NO
HISTORICAL OR ARCHEOLOGICAL AREAS: EAST CORINTH HISTORIC DISTRICT
PRIME AGRICULTURAL LAND: NO
THREATENED AND ENDANGERED SPECIES: NO
WATER RESOURCE: TABOR BRANCH
WETLANDS: NO

1.3 RISK EVALUATION

THIS PROJECT DOES NOT FALL UNDER THE JURISDICTION OF GENERAL PERMIT 3-9020 FOR STORMWATER RUNOFF FROM CONSTRUCTION SITES. SHOULD CHANGES PRIOR TO OR DURING CONSTRUCTION RESULT IN ONE OR MORE ACRES OF EARTH DISTURBANCE OR SHOULD THE PROJECT BECOME PART OF A LARGER PLAN OF DEVELOPMENT, THE CONTRACTOR WILL BE RESPONSIBLE FOR ANY ADDITIONAL PERMITTING.

1.4 EROSION PREVENTION AND SEDIMENT CONTROL

THE EROSION CONTROL PLANS ARE MEANT AS A GUIDELINE FOR PREVENTING EROSION AND CONTROLLING SEDIMENT TRANSPORT. THE PRINCIPLES OUTLINED IN THIS NARRATIVE CONSIST OF APPLYING MEASURES THROUGHOUT CONSTRUCTION OF THE PROJECT IN ORDER TO MINIMIZE SEDIMENT TRANSPORT TO THE RECEIVING WATERS. THE MEASURES INCLUDE STABILIZATION AND STRUCTURAL PRACTICES, STORM WATER CONTROLS AND OTHER POLLUTION PREVENTION PRACTICES. THEY HAVE BEEN PROPOSED BY THE DESIGNER AS A BASIS FOR PROTECTING RESOURCES AND WILL NEED TO BE BUILT UPON BASED ON THE SPECIFIC MEANS AND METHODS OF THE CONTRACTOR. REFER TO THE LOW RISK SITE HANDBOOK AND APPROPRIATE DETAIL SHEETS FOR SPECIFIC GUIDANCE AND CONSTRUCTION DETAILING.

ALL MEASURES SHALL BE REGULARLY MAINTAINED AND SHALL BE CHECKED FOR SEDIMENT BUILD-UP. SEDIMENT SHALL BE DISPOSED OF AT AN APPROVED SITE WHERE IT WILL NOT BE SUBJECT TO EROSION.

1.4.1 MARK SITE BOUNDARIES

SITE BOUNDARIES AND AREAS CONSTRUCTION EQUIPMENT CAN ACCESS SHALL BE DELINEATED.

PROJECT DEMARCATION FENCING (PDF) SHALL BE USED TO PHYSICALLY MARK SITE BOUNDARIES.

1.4.2 LIMIT DISTURBANCE AREA

PREVENTING INITIAL SOIL EROSION BY MINIMIZING THE EXPOSED AREA IS MUCH MORE EFFECTIVE THAN TREATING ERODED SEDIMENT. EARTH DISTURBANCE CAN BE MINIMIZED THROUGH CONSTRUCTION PHASING BY ONLY OPENING UP EARTH AS NECESSARY. THIS CAN LIMIT THE AREA THAT WILL BE DISTURBED AND EXPOSED TO EROSION. EMPLOY TEMPORARY CONSTRUCTION STABILIZATION PRACTICES IN INCREMENTAL STAGES AS PHASES CHANGE. FOR PROJECTS WHICH FALL UNDER THE CONSTRUCTION GENERAL PERMIT, ONLY THE ACREAGE LISTED ON THE PERMIT AUTHORIZATION MAY BE EXPOSED AT ANY GIVEN TIME.

MAINTAINING VEGETATED BUFFERS ALONG STREAM BANKS, WETLANDS OR OTHER SENSITIVE AREAS IS A CRUCIAL EROSION AND SEDIMENT CONTROL MEASURE THAT SHOULD BE ESTABLISHED WHEREVER POSSIBLE.

1.4.3 SITE ENTRANCE/EXIT STABILIZATION

TRACKING OF SEDIMENT ONTO PUBLIC HIGHWAYS SHALL BE MINIMIZED TO REDUCE THE POTENTIAL FOR RUNOFF ENTERING RECEIVING WATERS. INSTALLATION SHALL COINCIDE WITH THE CONTRACTOR’S PROGRESS SCHEDULE.

STABILIZED CONSTRUCTION ENTRANCES SHALL BE INSTALLED AS PROPOSED ON THE EPSC PLAN AND ANYWHERE EQUIPMENT WILL BE GOING FROM AREAS OF EXPOSED SOILS TO PAVED SURFACES.

1.4.4 INSTALL SEDIMENT BARRIERS

SEDIMENT BARRIERS SHALL BE UTILIZED TO INTERCEPT RUNOFF AND ALLOW SUSPENDED SEDIMENT TO SETTLE OUT. THEY SHALL BE INSTALLED PRIOR TO ANY UP SLOPE WORK.

SILT FENCE AND INLET PROTECTION DEVICES SHALL BE USED AT THE LOCATIONS SHOWN ON THE EPSC PLAN.

1.4.5 DIVERT UPLAND RUNOFF

DIVERSIONARY MEASURES SHALL BE USED TO INTERCEPT RUNOFF FROM ABOVE THE CONSTRUCTION AND DIRECT IT AROUND THE DISTURBED AREA SO THAT CLEAN WATER DOES NOT BECOME MUDDIED WHILE TRAVELING OVER EXPOSED SOILS ON THE CONSTRUCITON SITE.

THE PROJECT AREA IS RELATIVELY FLAT WITH MINIMAL OFF-SITE RUNOFF FLOWING THROUGH THE SITE. THERFORE DIVERSION MEASURES WILL NOT BE NECESSARY.

1.4.6 SLOW DOWN CHANNELIZED RUNOFF

CHECK STRUCTURES SHALL BE UTILIZED TO REDUCE THE VELOCITY, AND THUS THE EROSIVE POTENTIAL, OF CONCENTRATED FLOW IN CHANNELS.

CHECK DAMS TO BE INSTALLED AT THE LOCATIONS SHOWN ON THE EPSC PLAN.

1.4.7 CONSTRUCT PERMANENT CONTROLS

THERE ARE NO PERMANENT STORMWATER TREATMENT DEVICES TO BE INSTALLED WITH THIS PROJECT.

1.4.8 STABILIZE EXPOSED SOILS DURING CONSTRUCTION

ALL AREAS OF DISTURBANCE MUST HAVE TEMPORARY STABILIZATION IN PLACE WITHIN 48 HOURS OF DISTURBANCE OR IN ACCORDANCE WITH THE CONSTRUCTION GENERAL PERMIT 3-9020 AUTHORIZATION.

SURFACE ROUGHENING OF ALL EXPOSED SLOPES, COMBINED WITH TEMPORARY MULCHING, SHALL BE UTILIZED ON A REGULAR BASIS. BIODEGRADABLE EROSION CONTROL MATTING OR AN EQUIVALENT SHALL BE USED TO STABILIZE ALL SLOPES STEEPER THAN 1:3.

THE FORECAST OF RAINFALL EVENTS SHALL TRIGGER IMMEDIATE PROTECTION OF EXPOSED SOILS.

1.4.9 WINTER STABILIZATION

VARIOUS MEASURES SPECIFIC TO WINTER MAY BE NECESSARY SHOULD THE PROJECT EXTEND INTO WINTER (OCTOBER 15 THROUGH APRIL 15). REFER TO THE LOW RISK SITE HANDBOOK FOR GUIDANCE.

1.4.10 STABILIZE SOIL AT FINAL GRADE

EXPOSED SOIL MUST BE STABILIZED WITHIN 48 HOURS OF REACHING FINAL GRADE.

SEED, MULCH, FERTILIZER AND LIME SHALL BE USED TO ESTABLISH PERMANENT VEGETATION. FOR SLOPES STEEPER THAN 1:3, BIODEGRADABLE EROSION CONTROL MATTING OR AN EQUIVALENT SHALL BE USED INSTEAD OF MULCH.

1.4.11 DE-WATERING ACTIVITIES

IT IS NOT ANTICIPATED THAT DEWATERING ACTIVITIES WILL BE REQUIRED.

1.4.12 INSPECT YOUR SITE

INSPECT THE PROJECT SITE BASED ON SPECIAL PROVISION REQUIREMENTS.

1.5 SEQUENCE AND STAGING

THIS SECTION WILL BE DEVELOPED BY THE CONTRACTOR USING THE GUIDANCE OUTLINED IN THE VTRANS EPSC PLAN CONTRACTOR CHECKLIST.

1.5.1 CONSTRUCTION SEQUENCE

1.5.2 OFF-SITE ACTIVITIES

IN ADDITION TO THE CONTRACTOR CHECKLIST ANY ACTIVITIES OUTSIDE THE CONSTRUCTION LIMITS SHALL FOLLOW SUBSECTIONS 105.25- 105.29 OF THE STANDARD SPECIFICATIONS FOR CONSTRUCTION.

1.5.3 UPDATES

8/4/2014 12:14:45 PM V:\953\active\95310795\transportation\drawing\z0ij292_frm.dgn

Stantec

PROJECT NAME:	CORINTH
PROJECT NUMBER:	BRO 1447(29)
FILE NAME: ...\drawing\z0ij292_frm.dgn	PLOT DATE: 8/4/2014
PROJECT LEADER: G. BOGUE	DRAWN BY: E. ALLING
DESIGNED BY: M. CHENETTE	CHECKED BY: G. BOGUE
EPSC NARRATIVE SHEET – ECN 1	SHEET 51 OF 57



Stantec

PROJECT NAME: CORINTH	
PROJECT NUMBER: BRO 1447(29)	
FILE NAME: ...\drawing\z01j292_bdr_ero.dgn	PLOT DATE: 8/4/2014
PROJECT LEADER: G. BOGUE	DRAWN BY: E. ALLING
DESIGNED BY: E. ALLING	CHECKED BY: T. LUTHER
EPSC CONSTRUCTION SITE PLAN - ECP 1	SHEET 52 OF 57

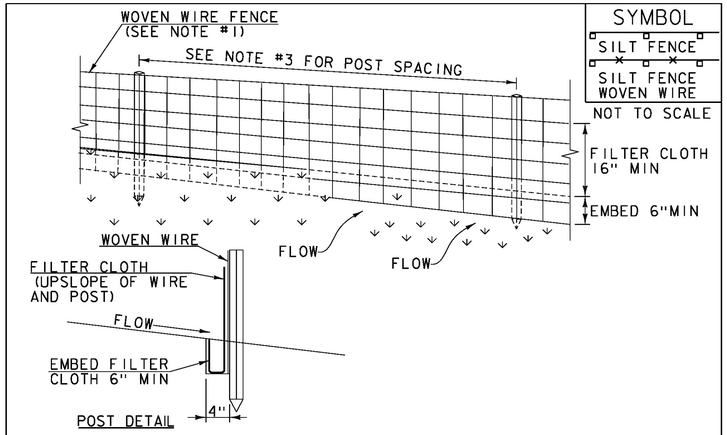

SYMBOL

SILT FENCE

SILT FENCE WOVEN WIRE

NOT TO SCALE

CONSTRUCTION SPECIFICATIONS

1. WOVEN WIRE REINFORCED FENCE IS REQUIRED WITHIN 100' UPSLOPE OF RECEIVING WATERS WHEN THE PROJECT FALLS UNDER A CONSTRUCTION STORMWATER PERMIT. WOVEN WIRE SHALL BE A MIN. 14 GAUGE WITH A 6" MAX. MESH OPENING.
2. FILTER CLOTH SHALL BE EITHER FILTER X, MIRAFI100X, STABILINKA T140N OR APPROVED EQUIVALENT.
3. POST SPACING FOR WIRE-BACKED FENCE SHALL BE 10' MAXIMUM. FOR FILTER-CLOTH FENCE, WHEN ELONGATION IS >50%, POST SPACING SHALL NOT EXCEED 4' AND WHEN ELONGATION IS <50%, POST SPACING SHALL NOT EXCEED 6'.
4. WOVEN WIRE FENCE IS TO BE FASTENED SECURELY TO FENCE POSTS WITH WIRE TIES. FILTER CLOTH IS TO BE FASTENED SECURELY TO WOVEN WIRE FENCE WITH TIES SPACED EVERY 24" AT TOP AND MID SECTION.
5. WHEN TWO SECTIONS OF FILTER CLOTH ADJOIN EACH OTHER THEY SHALL BE OVER-LAPPED BY 6" AND FOLDED.
6. MAINTENANCE SHALL BE PERFORMED AS NEEDED AND MATERIAL REMOVED WHEN SEDIMENT REACHES HALF OF FABRIC HEIGHT.

ADAPTED FROM DETAILS PROVIDED BY: NEW YORK STATE DEC
ORIGINALLY DEVELOPED BY USDA-NRCS
VERMONT DEPARTMENT OF ENVIRONMENTAL CONSERVATION

SILT FENCE

NOTES:
REFER TO "THE VERMONT STANDARDS & SPECIFICATIONS FOR EROSION PREVENTION & SEDIMENT CONTROL -2006- "FROM THE VT AGENCY OF NATURAL RESOURCES FOR ADDITIONAL GUIDANCE.

THIS WORK SHALL BE PERFORMED IN ACCORDANCE WITH SECTION 649 AND AS SHOWN IN THE PLANS FOR GEOTEXTILE FOR SILT FENCE (PAY ITEM 649.51) OR GEOTEXTILE FOR SILT FENCE, WOVEN WIRE REINFORCED (PAY ITEM 649.515).

REVISIONS	
MARCH 21, 2008	WHF
DECEMBER 11, 2008	WHF
JANUARY 13, 2009	WHF

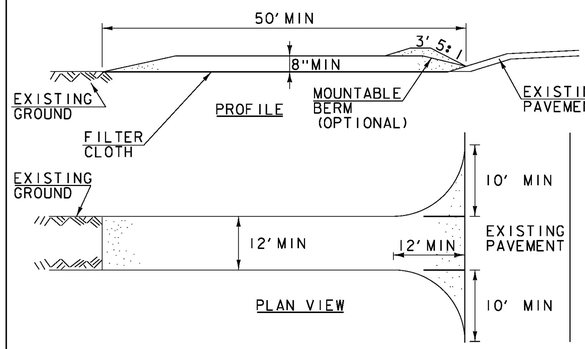

SYMBOL

NOT TO SCALE

CONSTRUCTION SPECIFICATIONS

1. STONE SIZE- USE 1-4" STONE, RECLAIMED OR RECYCLED CONCRETE EQUIVALENT.
2. LENGTH- NOT LESS THAN 50' (EXCEPT ON A SINGLE RESIDENCE LOT WHERE A 30' MINIMUM LENGTH APPLIES).
3. THICKNESS- NOT LESS THAN 8".
4. WIDTH- 12' MINIMUM, BUT NOT LESS THAN THE FULL WIDTH AT POINTS WHERE INGRESS OR EGRESS OCCURS. 24' IF SINGLE ENTRANCE TO SITE.
5. GEOTEXTILE MUST BE PLACED OVER THE ENTIRE AREA PRIOR TO PLACING STONE.
6. SURFACE WATER- ALL SURFACE WATER FLOWING OR DIVERTED TOWARD CONSTRUCTION ENTRANCES SHALL BE PIPED BENEATH THE ENTRANCE. IF PIPING IS IMPRACTICAL, A MOUNTABLE BERM WITH 5:1 SLOPES WILL BE PERMITTED.
7. MAINTENANCE- THE ENTRANCE SHALL BE MAINTAINED IN A CONDITION WHICH WILL PREVENT TRACKING OR FLOWING OF SEDIMENT ONTO PUBLIC RIGHTS-OF-WAY, ALL SEDIMENT SPILLED, DROPPED, WASHED OR TRACKED ONTO PUBLIC RIGHTS-OF-WAY MUST BE REMOVED IMMEDIATELY.
8. WHEN WASHING IS REQUIRED, IT SHALL BE DONE ON AN AREA STABILIZED WITH STONE AND WHICH DRAINS INTO AN APPROVED SEDIMENT TRAPPING DEVICE.
9. PERIODIC INSPECTION AND NEEDED MAINTENANCE SHALL BE PROVIDED ACCORDING TO PERMIT REQUIREMENTS.

ADAPTED FROM DETAILS PROVIDED BY: NEW YORK STATE DEC
ORIGINALLY DEVELOPED BY USDA-NRCS
VERMONT DEPARTMENT OF ENVIRONMENTAL CONSERVATION

STABILIZED CONSTRUCTION ENTRANCE

NOTES:
REFER TO "THE VERMONT STANDARDS & SPECIFICATIONS FOR EROSION PREVENTION & SEDIMENT CONTROL -2006- "FROM THE VT AGENCY OF NATURAL RESOURCES FOR ADDITIONAL GUIDANCE.

THIS WORK SHALL BE PERFORMED IN ACCORDANCE WITH SECTION 653 FOR VEHICLE TRACKING PAD (PAY ITEM 653.35) OR AS SPECIFIED IN THE CONTRACT.

REVISIONS	
MARCH 24, 2008	WHF
JANUARY 13, 2009	WHF

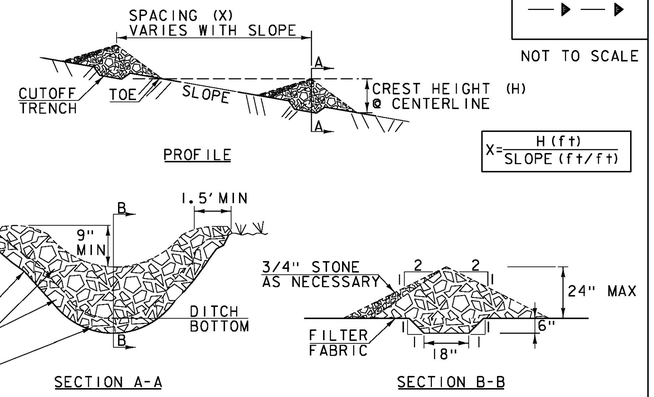

SYMBOL

NOT TO SCALE

CONSTRUCTION SPECIFICATIONS

1. STONE WILL BE PLACED ON A FILTER FABRIC FOUNDATION.
2. CHECK DAMS SHALL BE SPACED SO THAT THE ELEVATION OF THE CREST OF THE DOWNSTREAM DAM IS AT THE SAME ELEVATION AS THE TOE OF THE UPSTREAM DAM.
3. 3/4" FILTERING STONE MAY BE ADDED TO THE FACE OF THE CHECK DAM AS NECESSARY.
4. EXTEND THE STONE A MINIMUM OF 1.5' BEYOND THE DITCH BANKS TO PREVENT CUTTING AROUND THE DAM.
5. PROTECT CHANNEL DOWNSTREAM OF THE LOWEST CHECK DAM FROM SCOUR AND EROSION WITH STONE OR LINER AS APPROPRIATE.
6. ENSURE THAT CHANNEL APPURTENANCES SUCH AS CULVERT ENTRANCES BELOW CHECK DAMS ARE NOT SUBJECT TO DAMAGE OR BLOCKAGE FROM DISPLACED STONE.
7. MAXIMUM DRAINAGE AREA 2 ACRES.

ADAPTED FROM DETAILS PROVIDED BY: NEW YORK STATE DEC
ORIGINALLY DEVELOPED BY USDA-NRCS
VERMONT DEPARTMENT OF ENVIRONMENTAL CONSERVATION

CHECK DAM

NOTES:
REFER TO "THE VERMONT STANDARDS & SPECIFICATIONS FOR EROSION PREVENTION & SEDIMENT CONTROL -2006- "FROM THE VT AGENCY OF NATURAL RESOURCES FOR ADDITIONAL GUIDANCE.

THIS WORK SHALL BE PERFORMED IN ACCORDANCE WITH SECTION 653 FOR TEMPORARY STONE CHECK DAM, TYPE I (PAY ITEM 653.25)

REVISIONS	
MARCH 21, 2008	WHF
JANUARY 8, 2009	WHF

PROJECT NAME:	CORINTH
PROJECT NUMBER:	BRO 1447(29)
FILE NAME: ...\drawing\z0lj292_typ.dgn	PLOT DATE: 8/4/2014
PROJECT LEADER: VTRANS	DRAWN BY: VTRANS
DESIGNED BY: VTRANS	CHECKED BY: VTRANS
EPSC DETAIL SHEET - ECD 1	SHEET 53 OF 57

8/4/2014 12:14:58 PM V:\1953\active\19530795\transportation\drawing\z0lj292_typ.dgn

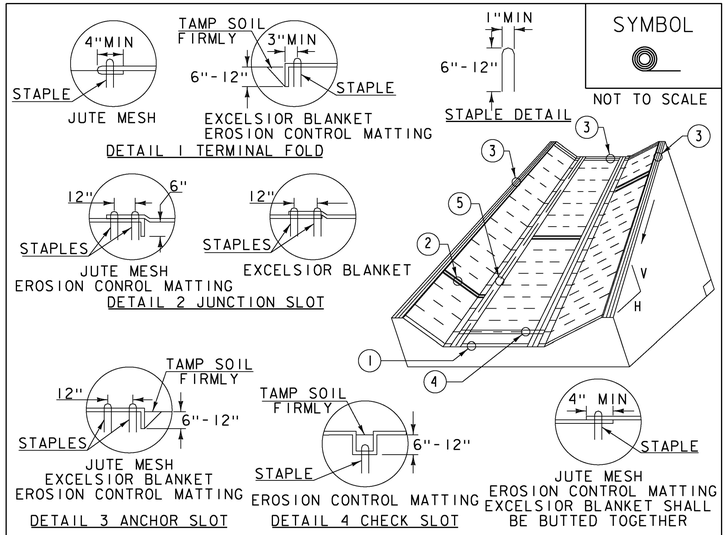

CONSTRUCTION SPECIFICATIONS

1. EROSION MATTING, CHECK SLOTS, SHALL BE SPACED IN DITCH CHANNEL SO THAT ONE OCCURS WITHIN EACH 50' ON SLOPES OF MORE THAN 4% AND LESS THAN 6%. ON SLOPES OF 6% OR MORE, THEY SHALL BE SPACED SO THAT ONE OCCURS WITHIN EACH 25'.
2. APPLY FERTILIZER, LIME SEED PRIOR TO PLACING MATTING.
3. STAPLES ARE TO BE PLACED ALTERNATELY, IN COLUMNS APPROXIMATELY 2' APART AND IN ROWS APPROXIMATELY 3' APART. APPROXIMATELY 175 STAPLES ARE REQUIRED PER 4'X225' ROLL OF MATERIAL AND 125 STAPLES ARE REQUIRED PER 4'X150' ROLL OF MATERIAL.
4. DISTURBED AREAS SHALL BE SMOOTHLY GRADED. EROSION CONTROL MATERIAL SHALL BE PLACED LOOSELY OVER GROUND SURFACE. DO NOT STRETCH.
5. ALL TERMINAL ENDS AND TRANSVERSE LAPS SHALL BE STAPLED AT APPROXIMATELY 12" INTERVALS.

ADAPTED FROM DETAILS PROVIDED BY: NEW YORK STATE DEC ORIGINALLY DEVELOPED BY USDA-NRCS VERMONT DEPARTMENT OF ENVIRONMENTAL CONSERVATION

ROLLED EROSION CONTROL PRODUCT (RECP) DITCH

NOTES:
REFER TO "THE VERMONT STANDARDS & SPECIFICATIONS FOR EROSION PREVENTION & SEDIMENT CONTROL -2006- "FROM THE VT AGENCY OF NATURAL RESOURCES FOR ADDITIONAL GUIDANCE.
THIS WORK SHALL BE PERFORMED IN ACCORDANCE WITH SECTION 653 AND AS SHOWN IN THE PLANS FOR TEMPORARY EROSION MATTING (PAY ITEM 653.20) OR PERMANENT EROSION MATTING (PAY ITEM 653.21).

REVISIONS	
MARCH 8, 2007	JMF
APRIL 16, 2007	WHF
JANUARY 13, 2009	WHF

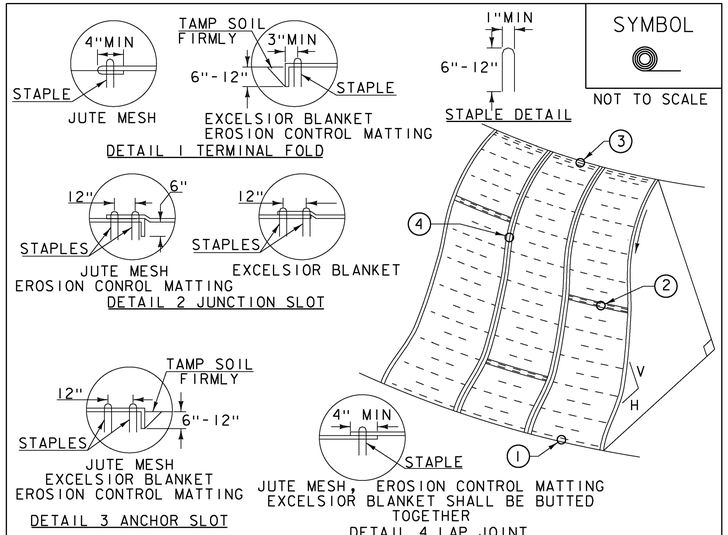

CONSTRUCTION SPECIFICATIONS

1. APPLY TO SLOPES GREATER THAN 3H: IV OR WHERE NECESSARY TO AID IN ESTABLISHING VEGETATION.
2. APPLY FERTILIZER, LIME SEED PRIOR TO PLACING MATTING.
3. STAPLES ARE TO BE PLACED ALTERNATELY, IN COLUMNS APPROXIMATELY 2' APART AND IN ROWS APPROXIMATELY 3' APART. APPROXIMATELY 175 STAPLES ARE REQUIRED PER 4'X225' ROLL OF MATERIAL AND 125 STAPLES ARE REQUIRED PER 4'X150' ROLL OF MATERIAL.
4. DISTURBED AREAS SHALL BE SMOOTHLY GRADED. EROSION CONTROL MATERIAL SHALL BE PLACED LOOSELY OVER GROUND SURFACE. DO NOT STRETCH.
5. ALL TERMINAL ENDS AND TRANSVERSE LAPS SHALL BE STAPLED AT APPROXIMATELY 12" INTERVALS.

ADAPTED FROM DETAILS PROVIDED BY: NEW YORK STATE DEC ORIGINALLY DEVELOPED BY USDA-NRCS VERMONT DEPARTMENT OF ENVIRONMENTAL CONSERVATION

ROLLED EROSION CONTROL PRODUCT (RECP) SIDE SLOPE

NOTES:
REFER TO "THE VERMONT STANDARDS & SPECIFICATIONS FOR EROSION PREVENTION & SEDIMENT CONTROL -2006- "FROM THE VT AGENCY OF NATURAL RESOURCES FOR ADDITIONAL GUIDANCE.
THIS WORK SHALL BE PERFORMED IN ACCORDANCE WITH SECTION 653 AND AS SHOWN IN THE PLANS FOR TEMPORARY EROSION MATTING (PAY ITEM 653.20) OR PERMANENT EROSION MATTING (PAY ITEM 653.21).

REVISIONS	
APRIL 16, 2007	JMF
JANUARY 13, 2009	WHF

VAOT RURAL AREA MIX

LBS/AC					
% WEIGHT	BROADCAST	HYDROSEED	NAME	GERM %	PURITY %
37.5%	22.5	45	CREEPING RED FESCUE	85%	98%
37.5%	22.5	45	TALL FESCUE	90%	95%
5.0%	3	6	RED TOP	90%	95%
15.0%	9	18	BIRDSFOOT TREFOIL	85%	98%
5.0%	3	6	ANNUAL RYE GRASS	85%	95%
100%	60	120			

VAOT URBAN AREA MIX

LBS/AC					
% WEIGHT	BROADCAST	HYDROSEED	NAME	GERM %	PURITY %
42.5%	34	68	CREEPING RED FESCUE	85%	98%
10.0%	8	16	PERENNIAL RYE GRASS	90%	95%
42.5%	34	68	KENTUCKY BLUE GRASS	85%	85%
5.0%	4	8	ANNUAL RYE GRASS	85%	95%
100%	80	160			

SOIL AMENDMENT GUIDANCE

FERTILIZER		LIME	
BROADCAST	HYDROSEED	BROADCAST	HYDROSEED
10-20-10	*FOLLOW*	PELLETIZED	*FOLLOW*
500 LBS/AC	*MANUFACTURER*	2 TONS/AC	*MANUFACTURER*

CONSTRUCTION GUIDANCE

1. RURAL SEED MIX: USE AS INDICATED IN THE PLANS AND/OR FOR ALL ESTABLISHED UPLAND (NON WETLAND) AREAS DISTURBED BY THE CONTRACTOR.
2. URBAN SEED MIX: USE AS INDICATED IN THE PLANS AND/OR FOR ALL ESTABLISHED LAWN AREAS DISTURBED BY THE CONTRACTOR.
3. ALL SEED MIXTURES: SHALL NOT HAVE A WEED CONTENT EXCEEDING 0.40% BY WEIGHT AND SHALL BE FREE OF ALL NOXIOUS SEED.
4. FERTILIZER AND LIMESTONE: SHALL FOLLOW RATES SHOWN ON PLAN OR AS DIRECTED BY THE ENGINEER
5. HAY MULCH: TO BE PLACED ON EARTH SLOPES AT THE RATE OF 2 TONS/ACRE, ACHIEVE 90% GROUND COVER OR AS DIRECTED BY THE ENGINEER.
6. TOPSOIL: TO BE USED WITH SEED AS INDICATED ON THE PLANS, OR AS DIRECTED BY THE ENGINEER.
7. HYDROSEEDING: ALTHOUGH GUIDANCE IS GIVEN ABOVE THE SITE CONDITIONS AND THE TYPE OF HYDROSEED WILL ULTIMATELY DICTATE THE AMOUNTS AND TYPES OF SOIL AMENDMENTS TO BE APPLIED
8. TURF ESTABLISHMENT: PLACING SEED, FERTILIZER, LIME AND MULCH PRIOR TO SEPTEMBER 15 AND AFTER APRIL 15 CAN BETTER ENSURE A VIGOROUS GROWTH OF GRASS.

ADAPTED FROM VTRANS TECHNICAL LANDSCAPE MANUAL FOR ROADWAYS AND TRANSPORTATION FACILITIES

TURF ESTABLISHMENT

REVISIONS	
JUNE 23, 2009	WHF
JANUARY 15, 2010	WHF
FEBRUARY 16, 2011	WHF

PROJECT NAME: CORINTH
PROJECT NUMBER: BRO 1447(29)

FILE NAME: ...\drawing\z01j292_typ.dgn
PROJECT LEADER: VTRANS
DESIGNED BY: VTRANS
EPSC DETAIL SHEET - ECD 2

PLOT DATE: 8/4/2014
DRAWN BY: VTRANS
CHECKED BY: VTRANS
SHEET 54 OF 57

8/4/2014 12:14:58 PM V:\1953\active\19530795\transportation\drawing\z01j292_typ.dgn

SYMBOL

NOT TO SCALE

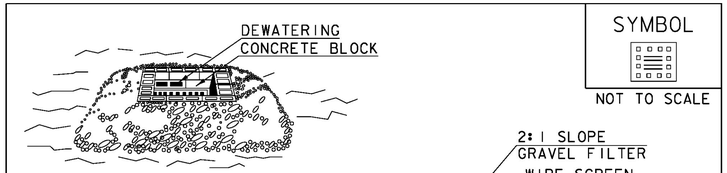

STONE & BLOCK PLAN VIEW

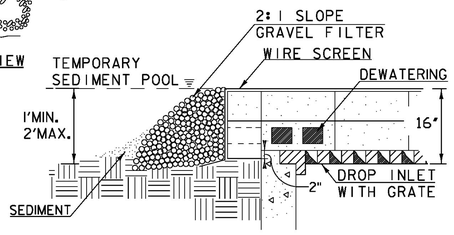

STONE & BLOCK DETAIL

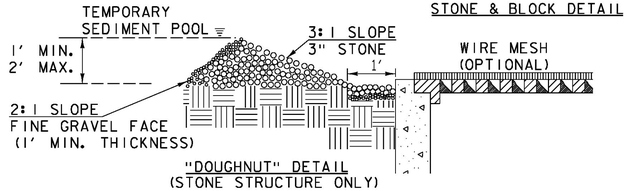

"DOUGHNUT" DETAIL
(STONE STRUCTURE ONLY)

CONSTRUCTION SPECIFICATIONS

1. LAY ONE BLOCK ON EACH SIDE OF THE STRUCTURE ON ITS SIDE FOR DEWATERING. FOUNDATION SHALL BE 2" MINIMUM BELOW REST OF INLET AND BLOCKS SHALL BE PLACED AGAINST INLET FOR SUPPORT.
2. HARDWARE CLOTH OR ½" WIRE MESH SHALL BE PLACED OVER BLOCK OPENINGS TO SUPPORT STONE.
3. USE CLEAN STONE OR GRAVEL ½"- ¾" IN DIAMETER PLACED 2" BELOW TOP OF THE BLOCK ON A 2:1 SLOPE OR FLATTER.
4. FOR STONE STRUCTURES ONLY, A 1' THICK LAYER OF THE FILTER STONE WILL BE PLACED AGAINST THE 3" STONE AS SHOWN ON THE DRAWINGS.
5. MAXIMUM DRAINAGE AREA 1 ACRE

ADAPTED FROM DETAILS PROVIDED BY: NEW YORK STATE DEC ORIGINALLY DEVELOPED BY USDA-NRCS VERMONT DEPARTMENT OF ENVIRONMENTAL CONSERVATION	STONE & BLOCK DROP INLET PROTECTION

NOTES:
REFER TO "THE VERMONT STANDARDS & SPECIFICATIONS FOR EROSION PREVENTION & SEDIMENT CONTROL -2006- " FROM THE VT AGENCY OF NATURAL RESOURCES FOR ADDITIONAL GUIDANCE.

THIS WORK SHALL BE PERFORMED IN ACCORDANCE WITH SECTION 653 FOR INLET PROTECTION DEVICE, TYPE I (PAY ITEM 653.40).

REVISIONS	
MARCH 6, 2008	WHF
JANUARY 13, 2009	WHF

SYMBOL

NOT TO SCALE

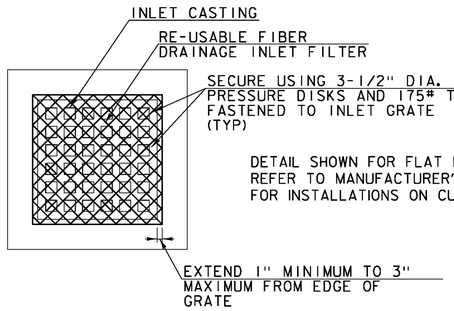

CONSTRUCTION SPECIFICATIONS

1. FILTERS SHALL RETAIN ALL CONSTRUCTION DEBRIS AND SHALL RETAIN OR OTHERWISE CONTROL MOST OF THE SEDIMENT PRODUCED BY CONSTRUCTION OPERATIONS.
2. IF CLOGGING OCCURS, INLETS SHALL BE ABLE TO BE EASILY UNCLOGGED BY BROOMING THE SIDES AND TOP OF THE FILTER.
3. INSTALLED FILTERS SHALL BE RESISTANT TO TRAFFIC DAMAGE, INCLUDING TRAFFIC BY STREET CLEANING MACHINES.
4. FILTER UNITS SHALL BE BIODEGRADABLE AND MAY OFTEN BE RE-USED.
5. INSTALL FILTER UNIT IN ACCORDANCE WITH MANUFACTURER'S RECOMMENDATIONS.
6. MINIMUM NUMBER OF ANCHORS PER FILTER UNIT: 7 FOR CURB INLETS, 8 FOR FLAT GRATES.
7. INSPECT ALL INSTALLED FILTER UNITS AFTER EVERY RAIN.
8. INSPECT ALL INSTALLED FILTER UNITS PRIOR TO INITIATING CONSTRUCTION ACTIVITIES FOR THE DAY IF RAIN PERSISTS OVERNIGHT.
9. IF, UPON VISUAL INSPECTION, 50% OR MORE OF FILTER FABRIC SURFACE AREA IS INUNDATED WITH SEDIMENT OR FILTER FABRIC IS CLOGGED, CONTRACTOR SHALL BROOM COLLECTED MATERIAL OFF FILTER UNIT SURFACES AND AWAY FROM EDGES.
10. REMOVE SEDIMENT AND DEBRIS COLLECTED AROUND FILTER UNITS. DISPOSE OF COLLECTED SEDIMENT AND DEBRIS OFF-SITE IN ACCORDANCE WITH THE VERMONT AGENCY OF NATURAL RESOURCES, SOLID WASTE MANAGEMENT RULES.

ORIGINALLY DEVELOPED BY STANTEC	INLET PROTECTION DEVICE, FILTER FIBER

NOTES:
THIS WORK SHALL BE PERFORMED IN ACCORDANCE WITH SECTION 900 FOR PAY ITEM 900.620 SPECIAL PROVISION (INLET PROTECTION DEVICE, FILTER FIBER).

8/4/2014 12:15:01 PM V:\1953\active\19530795\transportation\drawing\z0112292_typ.dgn

PROJECT NAME:	CORINTH
PROJECT NUMBER:	BRO 1447(29)
FILE NAME: ...\drawing\z0112292_typ.dgn	PLOT DATE: 8/4/2014
PROJECT LEADER: VTRANS	DRAWN BY: VTRANS
DESIGNED BY: VTRANS	CHECKED BY: VTRANS
EPSC DETAIL SHEET – ECD 3	SHEET 55 OF 57

STATE OF VERMONT
AGENCY OF TRANSPORTATION

RIGHT - OF - WAY DETAIL SHEET

TABLE OF PROPERTY ACQUISITION

PARCEL NO.	PROPERTY OWNER	ROW LAYOUT NO.	BEGINNING STATION	ENDING STATION	TAKE	REMAINDER	RIGHT			RECORDING DATA					REMARKS
					AREA±	AREA±	TYPE	T / P	AREA ±	TITLE	DATE	TOWN / CITY	BOOK	PAGE	
1	WILSON, CHRISTINE	1	101+26 LT	102+00 LT			SLOPE	T	35 SF						
			101+41.42 LT	102+36.08 LT			HWY	P	1,095 SF						
			100+76 LT	102+28 LT			CONST	T	1,010 SF						INCL. PDF & EC
2	LYDEM, WAYNE J. & MARGARET T.	1	102+28.11 LT	102+92.59 LT			HWY	P	450 SF						
			102+26 LT	102+89 LT			CONST	T	152 SF						INCL. EC, PDF & TEMP. CHECK DAM
			102+50 LT	102+58 LT			SLOPE	T	3 SF						
			102+88 LT	103+29 LT			REMOVE	T							FENCE
3	PARKER, LAURA A. & LEVY, ERIC J.	1	100+73 RT	101+24 RT			CONST	T	200 SF						INCL. EC & PDF
			101+67 RT	102+73 RT			DETOUR	T	2,075 SF						INCL. EC, PDF, TEMP. BRIDGE & TEMP. TRAFFIC BARRIER
			101+73 RT	101+86 RT			DRIVE	T	235 SF						
4	POLLI, SARAH;	1	102+58 RT	104+29 RT			DETOUR	T	4,490 SF						INCL. EC, PDF, TEMP. BRIDGE, TEMP TRAFFIC BARRIER &
	BARTON, JUDITH;														TEMP. CHECK DAM
	WILLIAMS, J. LARRY		103+26 RT	103+68 RT			SLOPE	T	300 SF						
			104+13 RT												MONITOR WELL W-1
5	GREEN MOUNTAIN POWER CORPORATION	1													UTILITY
6	TOPSHAM TELEPHONE COMPANY, INC.	1													UTILITY

TABLE OF REVISIONS

REVISION NO.	ROW SET SHEET #	DESCRIPTION	DATE
1	3, 4	PARCEL 2, LYDEM - ADD REMOVE (T)	11/21/13
		FOR FENCE.	
		COMPL. BY: MT CO 9845 APPR BY: RC	

APPROVED: RYAN CLOUTIER DATE: 10-29-13
CHIEF, PLANS & TITLES

PROJECT NAME: **CORINTH**
PROJECT NUMBER: **BRO 1447(29)**

FILE NAME: **r01j292detail.xls**
PROJECT LEADER: **D. LANDRY**
DESIGNED BY: **R. WHITE**
R.O.W. DETAIL SHEET #1

PLOT DATE: 21-NOV-2013
DRAWN BY: **M. TROTTIER**
CHECKED BY: **A. EGIZI**
SHEET 56 OF 57

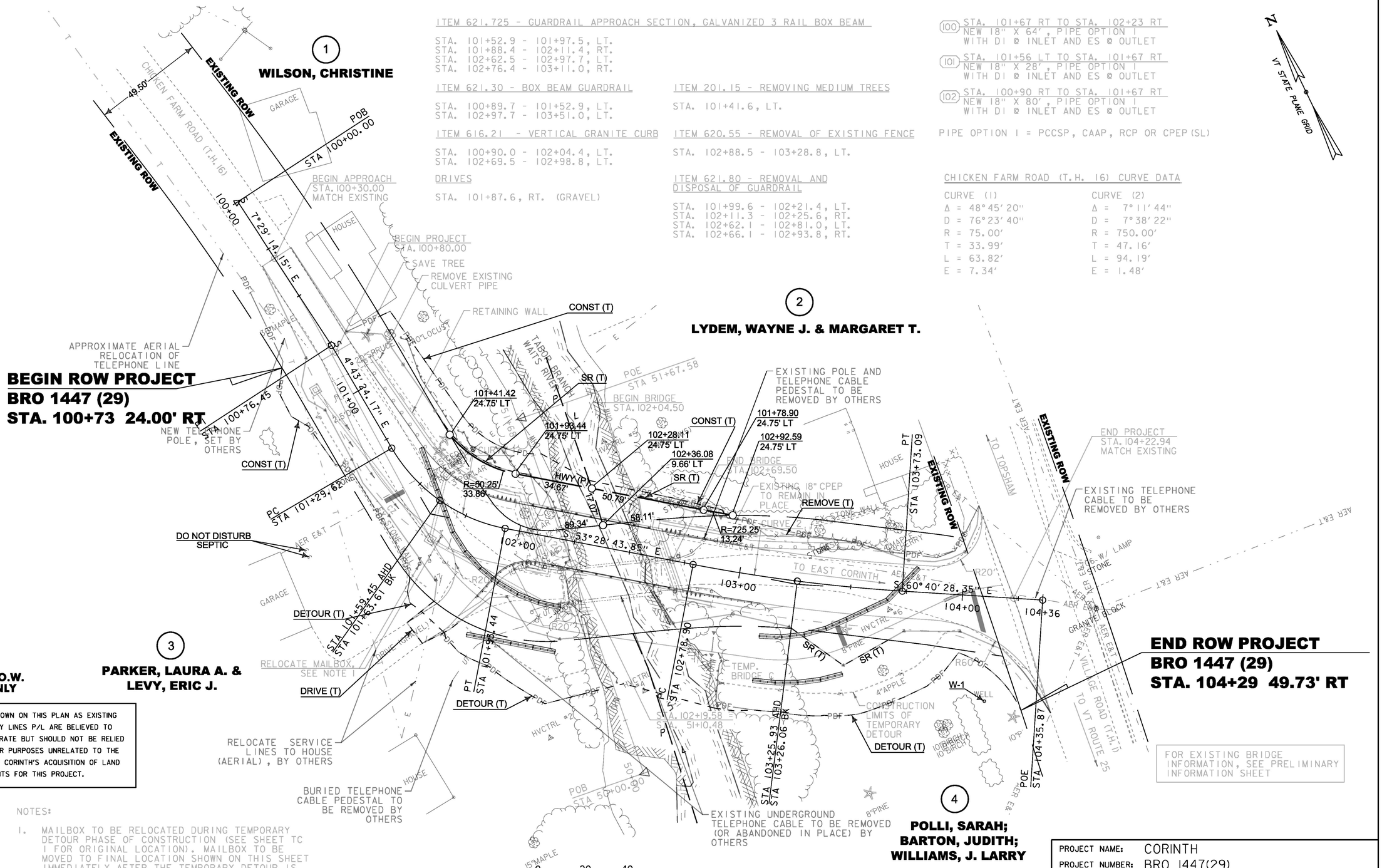

PROJECT NAME:	CORINTH
PROJECT NUMBER:	BRO 1447(29)
FILE NAME: r01j2921ay.dgn	PLOT DATE: 21-NOV-2013
PROJECT LEADER: D. LANDRY	DRAWN BY: A. EGIZI
DESIGNED BY: STANTEC	CHECKED BY: R. CLOUTIER
ROW LAYOUT SHEET 1 OF 1	SHEET 57 OF 57

CONCRETE GENERAL NOTES

1. ALL EXPOSED EDGES OF CONCRETE SHALL BE CHAMFERED 1" x 1"
2. REINFORCING STEEL SIZE AND SPACING SHOWN IN THE PLANS IS BASED ON 60 KSI STEEL, UNLESS NOTED OTHERWISE. WITH THE ENGINEER'S PERMISSION, BAR SIZE AND SPACING MAY BE MODIFIED ACCORDING TO THE LATEST AASHTO LRFD BRIDGE DESIGN SPECIFICATION AND STRUCTURES DESIGN MANUAL WHEN USING HIGHER STRENGTH STEEL.

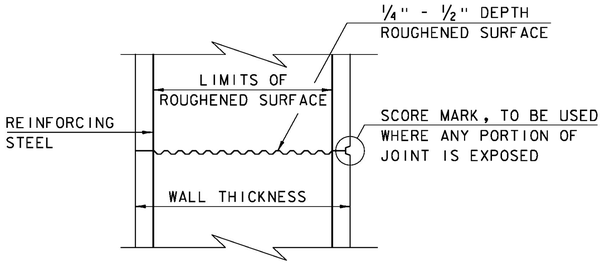

TYPICAL HORIZONTAL CONSTRUCTION JOINT
(NOT TO SCALE)

1. THE SURFACE OF THE CONCRETE CONSTRUCTION JOINTS SHALL BE CLEANED AND FREE OF LAITANCE.
2. IMMEDIATELY BEFORE NEW CONCRETE IS PLACED, ALL CONSTRUCTION JOINTS SHALL BE WETTED AND STANDING WATER REMOVED.

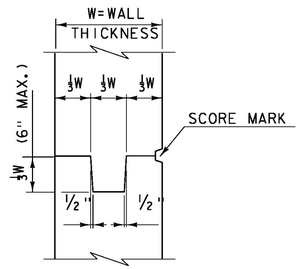

TYPICAL CONCRETE CONSTRUCTION JOINT
(NOT TO SCALE)

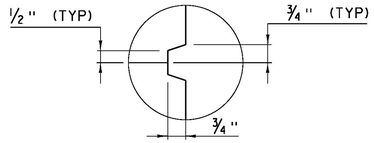

SCORE MARK DETAIL
(NOT TO SCALE)

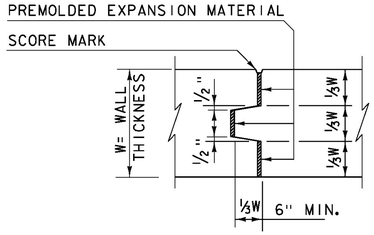

TYPICAL CONCRETE EXPANSION JOINT
(NOT TO SCALE)

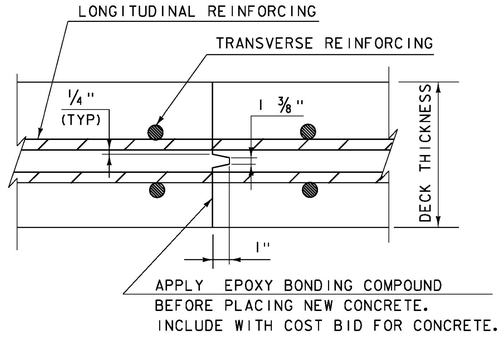

TRANSVERSE BRIDGE SLAB CONSTRUCTION JOINT DETAILS
(NOT TO SCALE)

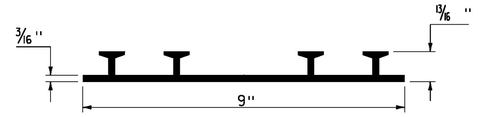

P.V.C. WATERSTOP FOR CONSTRUCTION JOINTS
(NOT TO SCALE)

PAYMENT FOR THE P.V.C. WATERSTOP SHALL BE INCIDENTAL TO THE UNIT BID PRICE FOR THE ADJACENT CONCRETE.

OTHER CONFIGURATIONS OF WATERSTOP MAY BE USED UPON APPROVAL OF THE ENGINEER.

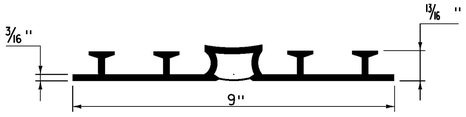

P.V.C. WATERSTOP FOR EXPANSION JOINTS
(NOT TO SCALE)

PAYMENT FOR THE P.V.C. WATERSTOP SHALL BE INCIDENTAL TO THE UNIT BID PRICE FOR THE ADJACENT CONCRETE.

OTHER CONFIGURATIONS OF WATERSTOP MAY BE USED UPON APPROVAL OF THE ENGINEER.

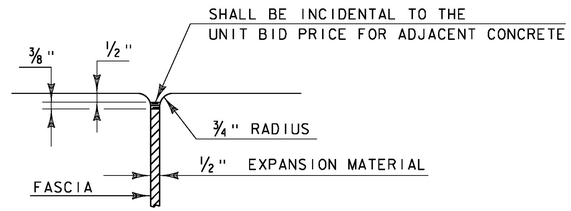

JOINT BETWEEN FASCIA AND WINGWALL
(NOT TO SCALE)

REVISIONS	
MAY 7, 2010	APPROVED FOR USE BY VAOT STRUCTURES SECTION
FEBRUARY 9, 2012	REBAR SUBSTITUTION ALLOWANCE ADDED TO CONCRETE GENERAL NOTES.

CONCRETE DETAILS AND NOTES

VERMONT AGENCY OF TRANSPORTATION
STRUCTURES SECTION

STRUCTURES DETAIL
SD-501.00

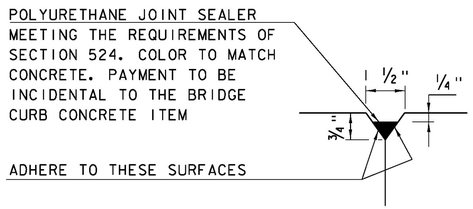

DETAIL "B"
(NOT TO SCALE)

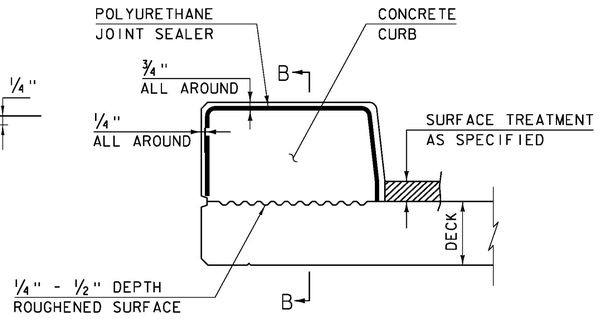

CONCRETE CURB JOINT SECTION
(NOT TO SCALE)

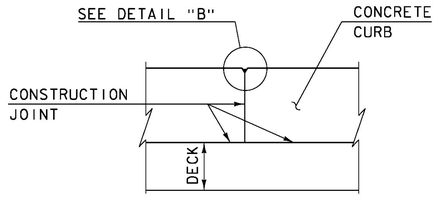

SECTION B - B
(NOT TO SCALE)

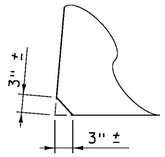

ACUTE ANGLE CLIP DETAIL
(NOT TO SCALE)

1. SEE TYPICAL HORIZONTAL CONSTRUCTION JOINT DETAIL FOR ADDITIONAL INFORMATION

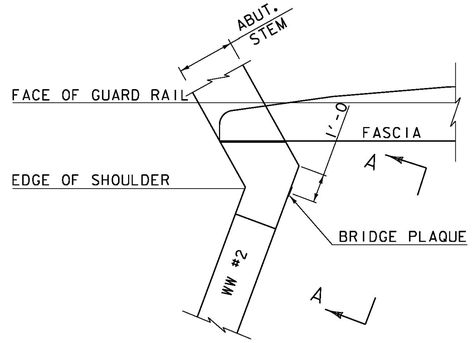

PLAN

CONCRETE CURB JOINT NOTES

1. CONCRETE CURBS MAY BE PLACED IN ONE CONTINUOUS OPERATION IF AN APPROVED SHRINKAGE REDUCING ADMIXTURE LISTED IN THE SPECIAL PROVISIONS IS USED WITH THE CONCRETE MIX DESIGN. PAYMENT FOR THE SHRINKAGE REDUCING ADMIXTURE WILL BE INCIDENTAL TO THE BRIDGE CURB CONCRETE ITEM.

2. IF THE CONTRACTOR CHOOSES NOT TO USE AN APPROVED SHRINKAGE REDUCING ADMIXTURE, THE CURBS SHALL BE CONSTRUCTED WITH CONSTRUCTION JOINTS SPACED AT A MAXIMUM OF 15'-0" CENTER TO CENTER AND 2'-0" MINIMUM FROM THE CENTER OF NEAREST BRIDGE RAILING POST.

3. ON MULTI-SPAN CONTINUOUS SUPERSTRUCTURES, REGARDLESS OF WHETHER APPROVED SHRINKAGE REDUCING ADMIXTURE IS USED, CURB JOINTS SHALL BE LOCATED OVER THE CENTERLINE OF PIERS AND 7'-0" EACH SIDE OF THE CENTERLINE OF EACH PIER.

4. WHEN CURB JOINTS ARE USED THE CURBS SHALL BE PLACED IN ALTERNATE SECTIONS WITH A MINIMUM OF 48 HOUR DELAY BETWEEN ADJACENT PLACEMENTS.

5. LONGITUDINAL REINFORCING SHALL BE CONTINUOUS THROUGH CURB CONSTRUCTION JOINTS. CURB STIRRUP BARS SHALL BE TURNED AS NECESSARY TO MAINTAIN COVER IN THE FLARED CURB ENDS.

6. THE JOINT SPACING AND DETAILS SHOWN SHALL APPLY TO SIDEWALKS WHEN SHOWN IN THE PLANS.

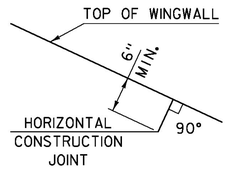

HORIZONTAL WINGWALL CONSTRUCTION JOINT
(NOT TO SCALE)

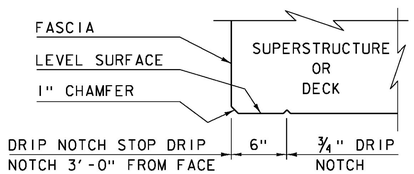

DRIP NOTCH DETAIL
(NOT TO SCALE)

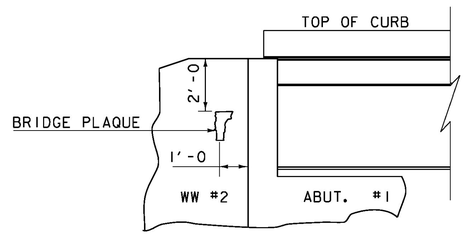

VIEW "A - A"

BRIDGE PLAQUE
(NOT TO SCALE)

THE BRIDGE PLAQUE WILL BE SUPPLIED BY THE AGENCY OF TRANSPORTATION AND SHALL BE INSTALLED BY THE CONTRACTOR AT ABUTMENT #1 ON THE RIGHT SIDE AS SHOWN OR AS DIRECTED BY THE ENGINEER.

PAYMENT FOR INSTALLATION OF THE BRIDGE PLAQUE SHALL BE INCIDENTAL TO THE ADJACENT CONCRETE.

REVISIONS	
MAY 7, 2010	APPROVED FOR USE BY VAOT STRUCTURES SECTION
JUNE 4, 2010	MODIFIED AND ADDED TWO DETAILS
OCTOBER 10, 2012	MODIFIED HORZ. JOINT WINGWALL ADD 6" MIN. DIMENSION

CONCRETE DETAILS AND NOTES

VERMONT AGENCY OF TRANSPORTATION
STRUCTURES - SECTION

STRUCTURES DETAIL
SD-502.00

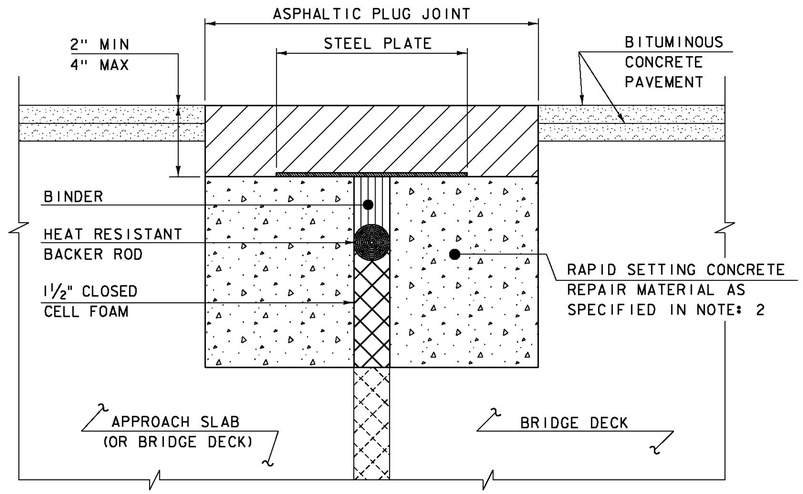

ASPHALTIC PLUG JOINT DETAIL - REHAB

NOTES:

1. THE CONTRACTOR SHALL REMOVE ALL ASPHALTIC PLUG JOINT MATERIAL AND DETERIORATED CONCRETE AS DIRECTED BY THE ENGINEER. REMOVAL OF THE FIRST 4 INCHES OF MATERIAL SHALL BE INCLUDED IN THE BID PRICE FOR ITEM 516.10 BRIDGE EXPANSION JOINT, ASPHALTIC PLUG. ANY REMOVAL OF MATERIAL GREATER THAN 4 INCHES SHALL BE INCLUDED IN THE BID PRICE OF ITEM 580.20 RAPID SETTING CONCRETE REPAIR MATERIAL WITH COARSE AGGREGATE.

2. THE CONTRACTOR SHALL REPLACE REMOVED MATERIAL THAT IS LESS THAN 4" FROM FINISHED GRADE WITH ASPHALTIC PLUG JOINT MATERIAL MEETING THE REQUIREMENTS OF SUBSECTION 707.15. ALL REMOVED MATERIAL THAT IS GREATER THAN 4 INCHES FROM FINISHED GRADE SHALL BE REPLACED WITH RAPID SETTING CONCRETE REPAIR MATERIAL WITH COARSE AGGREGATE MEETING THE REQUIREMENTS OF SUBSECTION 780.04.

3. REINFORCING STEEL NOT SHOWN FOR CLARITY.

4. PLACE 1/4" THICK BY 8" WIDE SECTIONS OF STEEL PLATE OVER THE CENTER OF THE MOVEMENT GAP. SECURE THE PLATES FROM MOVING BY INSERTING LOCATING PINS THROUGH THE PRE-STAMPED HOLES INTO BACKER ROD AND COVER WITH HOT BINDER. THE STEEL PLATES MAY BE OMITTED WHERE THE ENGINEER DETERMINES THAT THE APPROACH SLAB OR BRIDGE DECK WILL PROVIDE INADEQUATE SUPPORT AND WHERE VERTICAL MOVEMENT OF THE PLATES MIGHT OCCUR.

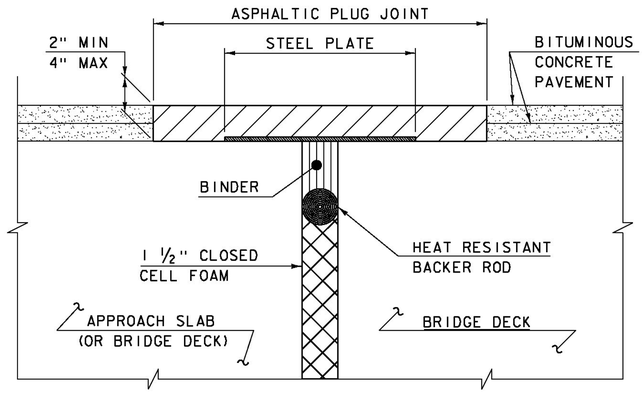

ASPHALTIC PLUG JOINT DETAIL "A" - NEW

NOTE:
PLACE 1/4" THICK BY 8" WIDE SECTIONS OF STEEL PLATE OVER THE CENTER OF THE MOVEMENT GAP. SECURE THE PLATES FROM MOVING BY INSERTING LOCATING PINS THROUGH THE PRE-STAMPED HOLES INTO BACKER ROD AND COVER WITH HOT BINDER.

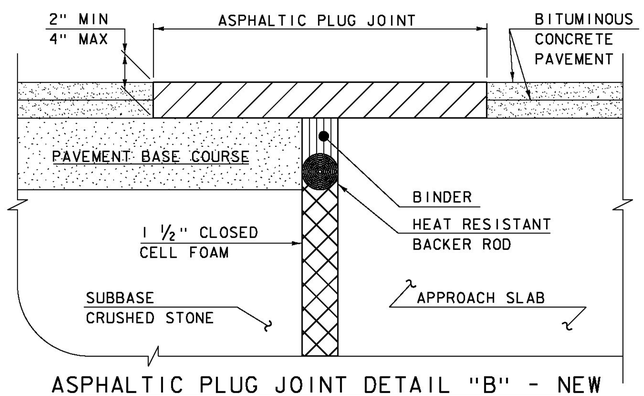

ASPHALTIC PLUG JOINT DETAIL "B" - NEW

ASPHALTIC PLUG JOINT NOTES

INSTALLATION:

1. LOCATE THE JOINT CENTRALLY OVER THE DECK OVERLAY EXPANSION GAP OR FIXED JOINT, MARKED OUT TO THE MANUFACTURER'S RECOMMENDED WIDTH.
2. REMOVE THE BITUMINOUS CONCRETE PAVEMENT FULL DEPTH AS SHOWN ON THE PLANS. THE PAVEMENT SHALL BE DRY AND SAW CUT TO THE LIMITS REQUIRED TO PLACE THE JOINT. A PNEUMATIC HAMMER AND CHISEL MAY BE USED ADJACENT TO THE CURB ONLY WHEN SAW CUTTING IS NOT POSSIBLE.
3. BLAST CLEAN THE JOINT AREA OF DEBRIS, ASPHALT AND SHEET MEMBRANE. THOROUGHLY DRY THE JOINT AREA WITH COMPRESSED AIR PRIOR TO APPLYING BINDER MATERIAL.
4. PLACE PROPERLY SIZED HEAT RESISTANT BACKER ROD IN THE MOVEMENT GAP ALLOWING FOR 1" +/- OF BINDER ABOVE THE ROD.
5. HEAT AND PLACE THE BINDER MATERIAL AS RECOMMENDED BY THE MANUFACTURER.
6. IMMEDIATELY AFTER TOP COATING, CAST AN ANTI-SKID MATERIAL OVER THE JOINT TO REDUCE THE RISK OF TRACKING.

WEATHER LIMITATIONS

APPLY BINDER MATERIAL ONLY WHEN THE FOLLOWING CONDITIONS PREVAIL OR AS RECOMMENDED BY THE MANUFACTURER:

1. THE AMBIENT AIR TEMPERATURE IS AT LEAST 10 DEG C (50 DEG F) AND RISING.
2. THE ROAD SURFACE IS DRY.
3. WEATHER CONDITIONS OR OTHER CONDITIONS ARE FAVORABLE AND ARE EXPECTED TO REMAIN SO FOR THE PERFORMANCE OF SATISFACTORY WORK.

DETAILS ON THIS SHEET ARE NOT TO SCALE.

REVISIONS	
MAY 7, 2010	APPROVED FOR USE BY VAOT STRUCTURES SECTION
AUGUST 29, 2011	ADD DETAIL "B" AND REV. NOTES

BRIDGE JOINT
ASPHALTIC PLUG

VERMONT AGENCY OF TRANSPORTATION
STRUCTURES - DIVISION

STRUCTURES DETAIL
SD-516.10

ABUTMENT 1 BEARINGS

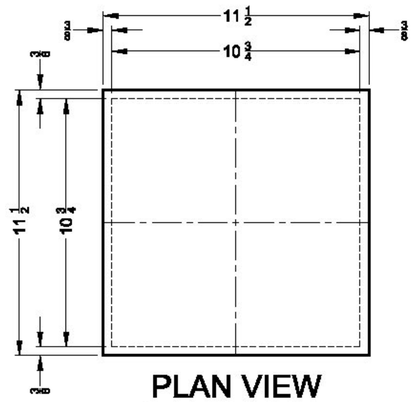

PLAN VIEW

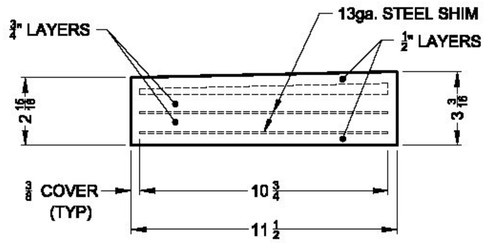

ELEVATION VIEW

QTY. REQ'D. = 6

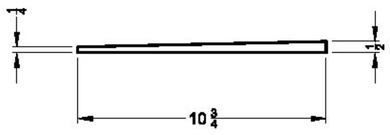

BEVELED SHIM DETAIL

ABUTMENT 2 BEARINGS

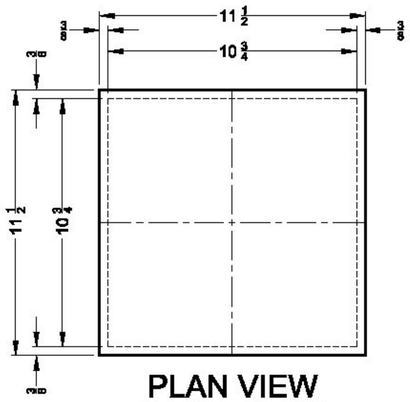

PLAN VIEW

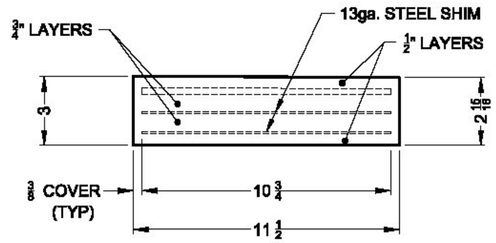

ELEVATION VIEW

QTY. REQ'D. = 6

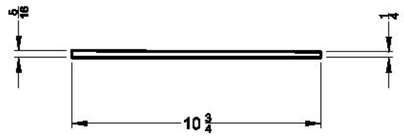

BEVELED SHIM DETAIL

Add direction of stationing for both bearings

REVISIONS					
ZONE	REV	DESCRIPTION	REVISED BY	DATE	APPROVED

NOTES:

1. MANUFACTURING FACILITY LOCATION:
   AMSCOT STRUCTURAL PRODUCTS CORP. CONTACT- PETER SOMOGYI
   241 E. BLACKWELL STREET PH: 973-989-8800
   DOVER, N.J. 07801 FAX: 973-989-5651
2. ALL BEARING PADS TO BE MANUFACTURED IN ACCORDANCE WITH AASHTO SECTION 18. THE ELASTOMER SHALL BE GRADE 3 NEOPRENE WITH A DUROMETER HARDNESS OF 60 ± 5. THE STEEL REINFORCING PLATES SHALL CONFORM TO ASTM A36.
3. THE BEARINGS ARE DESIGNED SO THE SUPERSTRUCTURE MAY BE ERECTED WHEN THE AMBIENT AIR TEMPERATURE IS WITHIN THE RANGE OF 20° F. TO 70° F. WITHOUT ADJUSTING THE BEARINGS FOR TEMPERATURE. IF THE BEAM TEMPERATURE IS OUTSIDE THIS RANGE, THE BEARINGS SHALL BE RESET AS DIRECTED BY THE RESIDENT ENGINEER.
4. ALL STEEL TO BE FACTORY VULCANIZED TO THE ELASTOMER DURING THE PRIMARY MOLDING PROCESS.
5. ALL DIMENSIONS ARE IN INCHES , UNLESS OTHERWISE NOTED.
6. TOLERANCES: THICKNESS -0 +1/8
   PLAN -0 +1/8

APPROVED: Approval of drawings and/or procedures indicates concurrence with the information presented and does not relieve the Contractor or Fabricator of compliance with all specifications and code requirements		Stantec
APPROVED AS NOTED	✓	
REVISE AND RESUBMIT		
NOT REVIEWED		
Date: 2/13/2015		
By:		

This review by Stantec Consulting Services Inc. is for the sole purpose of ascertaining conformance with the general design concept. This review shall not mean that Stantec Consulting Services Inc approves the detail design inherent in the shop drawings, responsibility for which shall remain with the Contractor. Submitting same, and such review shall not relieve the Contractor of his responsibility for errors or omissions in the shop drawing or of his responsibility for meeting all requirements of the Contract Documents. The contractor is responsible for dimensions to be confirmed and correlated at the job site, for information that pertains solely to the fabrication processes or to techniques of construction and installation and for coordination of the work of all subtrades.

Inspection Block
Initial Dim. Check Sign:_____ Date:_____
In Process Dim. Chk. Sign:_____ Date:_____
100% Visual Weld Insp. Sign:_____ Date:_____
Paint Insp.(see form) Sign:_____ Date:_____
Final Inspection Sign:_____ Date:_____

CORINTH

PROJECT NO. : BRO 1447(29)

CONTRACT NO. : PIN NO. :

ELASTOMERIC BEARING ASSEMBLY DETAILS

AMSCOT
STRUCTURAL PRODUCTS CORP.

SCALE: N.T.S.	APPRV'D:	DRAWN BY: E.J.G.
DATE: 11/6/14	BF	REVISION: 0

FOR: AUSTIN CONSTRUCTION

DWG NO: AC14A1RO		SHEET 1 OF 1

NEXT BEAM GENERAL NOTES

1. MIN. CONCRETE STRENGTH AT 28 DAYS SHALL BE 7,000 PSI.
2. MIN. CONCRETE STRENGTH AT STRESS TRANSFER SHALL BE 5,500 PSI.
3. REINFORCING STEEL SHALL BE GR-60, ASTM A-615 (AASHTO M31) LEVEL II (DUAL COATED).
4. PRESTRESSING STRANDS SHALL CONFORM TO ASTM A-416 (AASHTO M203) AND SHALL CONSIST OF 0.60"ø x 270 KSI 7-WIRE LOW RELAXATION STRANDS.
5. PRESTRESSING STRANDS SHALL EACH BE PULLED TO HAVE A NET TENSION OF 44.0 K AFTER ACCOUNTING FOR CHUCK SLIPPAGE. TENSION SHALL BE VERIFIED BY MEASURING STRAND ELONGATION. (SEE EXAMPLE ELONGATION CALCULATION AND TENSIONING PROCEDURE, THIS SHEET.)
6. ENDS OF PRESTRESSING STRANDS SHALL BE CUT FLUSH WITH END OF NEXT BEAM STEMS (UNLESS NOTED OTHERWISE).
7. ALL EXPOSED CORNERS SHALL BE CHAMFERED 3/4".
8. THE TOP OF BEAMS SHALL RECEIVE A SMOOTH SCREED FINISH (UNLESS NOTED OTHERWISE).
9. SHEAR KEY SURFACES SHALL BE SAND BLASTED CLEAN.
10. BEAMS SHALL BE HANDLED AND ERECTED USING THE LIFTING LOOPS ONLY. RIGGING SHALL BE CONFIGURED SUCH THAT EQUAL AND VERTICAL FORCES ARE APPLIED TO EACH OF THE TWO LIFTING LOOPS AT EACH END OF THE BEAM. THE PINS OF THE SHACKLES SHALL BE PLACED THROUGH THE LIFTING LOOPS. SEE DETAIL, THIS SHEET. BEAMS SHALL BE STORED AND TRANSPORTED WITH TIMBER SUPPORTS WITHIN 2'-0" OF THE BEAM ENDS, UNLESS APPROVED BY J.P. CARRARA & SONS, INC.
11. MATERIAL SPECIFICATION AND MIX DESIGN SHALL CONFORM TO VERMONT SPEC. P510.02 AND P510.05 RESPECTIVELY.

    DESIGN MIX: J.P.C. BRIDGE MIX #425M
12. QUALITY CONTROL PROCEDURES ARE IN ACCORDANCE WITH PCI REQUIREMENTS. J.P. CARRARA & SONS, INC. IS A PCI CERTIFIED PLANT.
13. CURING METHOD: AS SOON AS THE TOP OF BEAM IS FINISHED, A COVER OF INSULATED POLY. THE DESIRED CURING TEMPERATURE RANGE SHALL NOT DROP BELOW 70°F. THE TEMPERATURE SHALL BE RECORDED BY AUTOMATIC SENSOR INSTRUMENTS ON GRAPH CHARTS, SPACED NOT MORE THAN 100' APART AND WILL CONTINUE UNTIL RELEASE STRENGTH IS ACHIEVED. EACH CHART SHALL BE MARKED WITH THE CASTING DATED AND LOCATION OF THE RECORDER. IF NECESSARY TO MAINTAIN CASTING BED TEMPERATURE PRIOR TO CONCRETE PLACEMENT OR TO ACCELERATE EARLY AGE STRENGTH GAIN, EXTERNAL RADIANT HEAT MAY BE EMPLOYED VIA HOT WATER DUCTS BENEATH AND WITHIN THE PERIPHERY OF THE CASTING BED. MAXIMUM CURING TEMPERATURE SHALL NOT EXCEED PCI SPECIFIED LIMITS.
14. OWNER SHALL PROVIDE APPROPRIATE WATERPROOFING TO GROUTED AND/OR EPOXIED SHEAR KEYS. J.P. CARRARA & SONS, INC. SHALL NOT BE HELD LIABLE FOR PROBLEMS ASSOCIATED WITH MOISTURE INFILTRATING GROUTED AND/OR EPOXIED SHEAR KEYS.

DRAWING INDEX

SHT. #	DRAWING TITLE	REV. #	REV. DATE
C1	COVER SHEET	1	03-13-15
F1	PRECAST NEXT BEAM LAYOUT		
F2	CURTAIN WALL ELEVATIONS	1	03-13-15
NB1	PRESTRESSED NEXT BEAM DETAILS	1	03-13-15
NB1.1	PRECAST CURTAIN WALL DETAILS		
NB2	PRESTRESSED NEXT BEAM DETAILS "CR-NB1"	1	03-13-15
NB2.1	PRESTRESSED NEXT BEAM DETAILS "CR-NB1"		
NB2.2	PRECAST CURTAIN WALL DETAILS "CR-NB1"		
NB3	PRESTRESSED NEXT BEAM DETAILS "CR-NB2"	1	03-13-15
NB3.1	PRESTRESSED NEXT BEAM DETAILS "CR-NB2"		
NB3.2	PRECAST CURTAIN WALL DETAILS "CR-NB2"	1	03-13-15
NB4	PRESTRESSED NEXT BEAM DETAILS "CR-NB3"	1	03-13-15
NB4.1	PRESTRESSED NEXT BEAM DETAILS "CR-NB3"		
NB4.2	PRECAST CURTAIN WALL DETAILS "CR-NB3"	1	03-13-15
M1	MATERIALS LIST FOR NEXT BEAMS	1	03-13-15

EXAMPLE PRESTRESSING STRAND ELONGATION CALC. AND TENSIONING

(NOT TO BE USED FOR CONSTRUCTION)

SIZE & GRADE: 0.60"ø x 270 KSI
AREA: 0.217 IN^2
TENSION: 44,000 LB. EACH STRAND
GRIP-TO-GRIP: 252'-0" = 252.00'
Es = 28,500,000 PSI (ASSUMED FOR THESE CALCULATIONS; VALUE TO BE OBTAINED FOR STRAND SPOOL ACTUALLY USED)

EXAMPLE:

$$\triangle = \frac{PL}{AE} = \frac{(44{,}000 - 3{,}000) \times 252.00 \times 12}{0.217 \times 28{,}500{,}000} = 20.047"$$

THEREFORE: (TOLERANCES ± 5%)
△ UPPER LIMIT = 1.05 x 20.047" = 21.05" = 21"
△ LOWER LIMIT = 0.95 x 20.047" = 19.04" = 19"

EXTRA FORCE REQUIRED TO COMPENSATE FOR 1/2" CHUCK SLIPPAGE:

$$\triangle P = \frac{0.5 \times 41{,}000}{20.047} = 1{,}023 \text{ LBS.}$$

TOTAL TENSIONING FORCE = 44,000 + 1,023 = 45,023 LBS.

ADDITIONALLY, INCREASED ELONGATION AND THE CORRESPONDING FORCE DUE TO FORM SHORTENING SHALL BE ACCOUNTED FOR IN THE CALCULATIONS USED FOR CONSTRUCTION PER PROVISION PCI MNL 116 5.3.11.3.

STRAND TENSIONING PROCEDURE:

1. PULL EACH STRAND INITIALLY TO 3,000* LBS. AND MARK STRAND.
2. THEN PULL EACH STRAND TO A TOTAL TENSION OF 45,023* LBS. AND MEASURE ELONGATION AFTER SEATING. IT MUST BE BETWEEN 19"* AND 21"*.

   * NOTE: FORCES READ ON STRESSING JACK GAUGES MUST BE MADE TO CORRESPOND TO ABOVE VALUES BASED ON CALIBRATION DATA FOR SPECIFIC JACK USED.
3. STRANDS IN BOTTOM TWO ROWS SHALL BE RE-PULLED TO VERIFY SHORTENING EFFECT OF SELF STRESSING BED. RE-PULL FORCE SHALL NOT INCLUDE OVER-PULL FOR SHORTENING.

DESIGN LIVE LOAD: HL-93

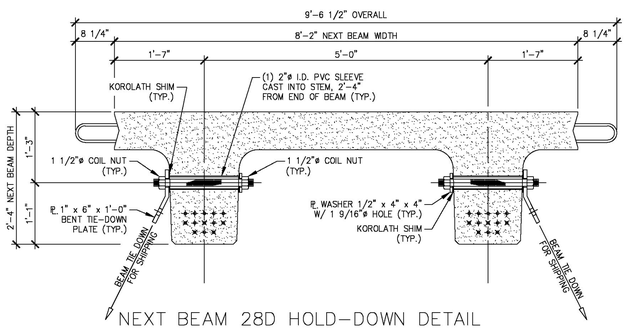

NEXT BEAM 28D HOLD-DOWN DETAIL FOR SHIPPING

3/4" = 1'-0"

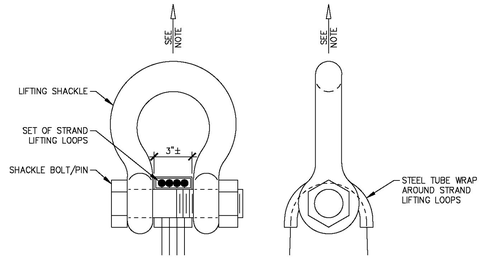

NOTE: BEAMS SHALL BE HANDLED AND ERECTED USING THE LIFTING LOOPS ONLY. RIGGING SHALL BE CONFIGURED SUCH THAT EQUAL AND VERTICAL FORCES ARE APPLIED TO EACH SET OF LIFTING LOOPS AT EACH END OF THE BEAM. SHACKLE BOLT/PIN SHALL BE PLACED UNDER LIFT LOOPS AS SHOWN. DESIGN AND CONFIGURATION OF RIGGING BY PURCHASER.

LIFTING SHACKLE DETAILS

N.T.S.

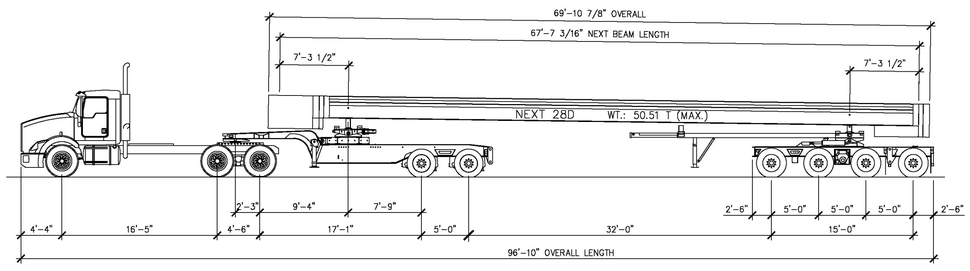

SHIPPING ELEVATION

N.T.S.

APPROVED: Approval of drawings and/or procedures indicates concurrence with the information presented and does not relieve the Contractor or Fabricator of compliance with all specifications and code requirements	x	Stantec
APPROVED AS NOTED		
REVISE AND RESUBMIT		
NOT REVIEWED		
Date: 3/27/2015		
By: Michael J. Chenette		

This review by Stantec Consulting Services Inc. is for the sole purpose of ascertaining conformance with the general design concept. This review shall not mean that Stantec Consulting Services Inc approves the detail design inherent in the shop drawings, responsibility for which shall remain with the Contractor. Submitting same, and such review shall not relieve the Contractor of his responsibility for errors or omissions in the shop drawing or of his responsibility for meeting all requirements of the Contract Documents. The contractor is responsible for dimensions to be confirmed and correlated at the job site, for information that pertains solely to the fabrication processes or to techniques of construction and installation and for coordination of the work of all subtrades.

⚠ 03-13-15 REVISED

APPROVAL STAMP:

J.P. CARRARA & SONS INC.
Precast & Prestress Manufacturer
2464 CASE STR., MIDDLEBURY, VERMONT 05753 Phone:(802)388-6361 Fax:(802)388-9010

AUSTIN CONSTRUCTION, INC.
CONTRACTOR
CONCORD, VERMONT

STATE OF VERMONT AGENCY OF TRANSPORTATION
COUNTY OF ORANGE

TOWN OF CORINTH
CHICKEN FARM ROAD T.H.16 CLASS 3 LOCAL ROAD
BRIDGE NO.: 36 PROJECT NO.: BRO 1447 (29)

COVER SHEET

DATE: MAR. 13, 2015
SCALE: NOTED
CHKD: RM DFTM: PSS
JOB NO: 23448-014
DWG. NO: C1

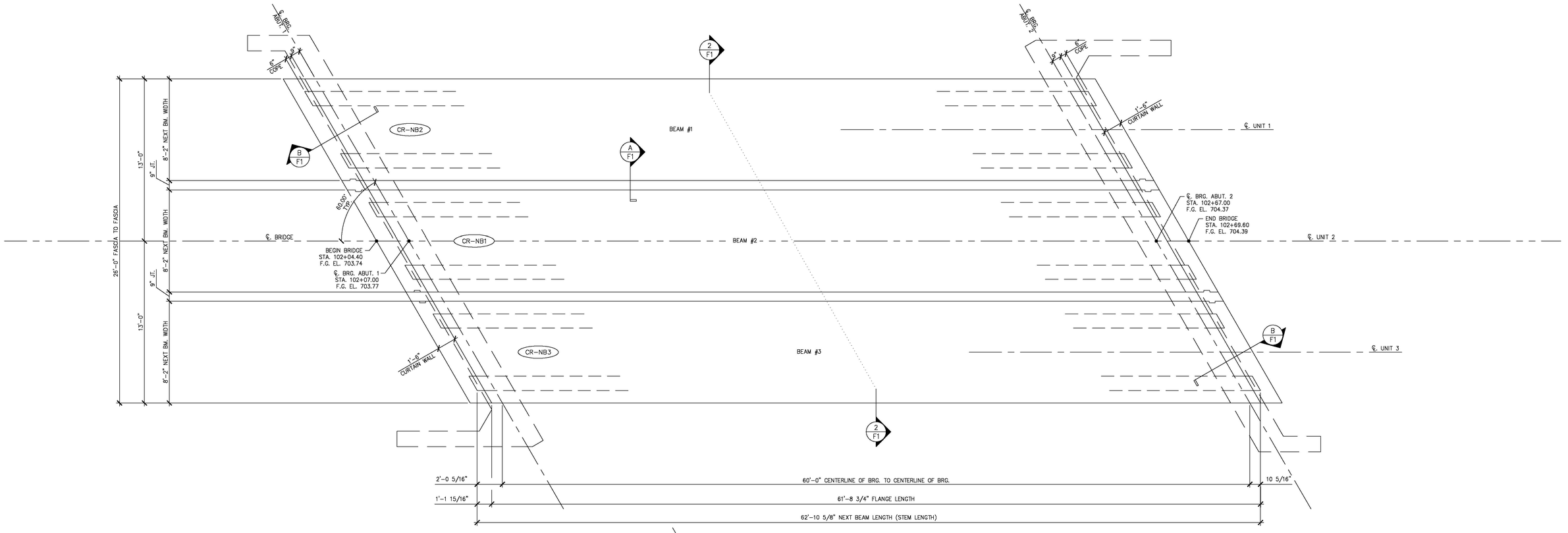

1 F1 NEXT BEAM LAYOUT
1/4" = 1'-0"

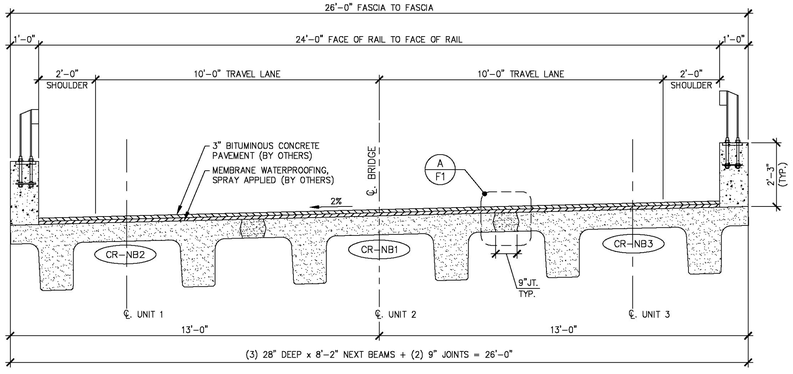

2 F1 TRANSVERSE NEXT BEAM SECTION
3/8" = 1'-0"

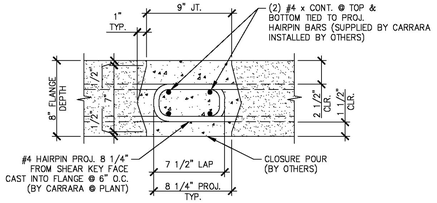

A F1 NEXT BEAM CLOSURE POUR
1 1/2" = 1'-0"

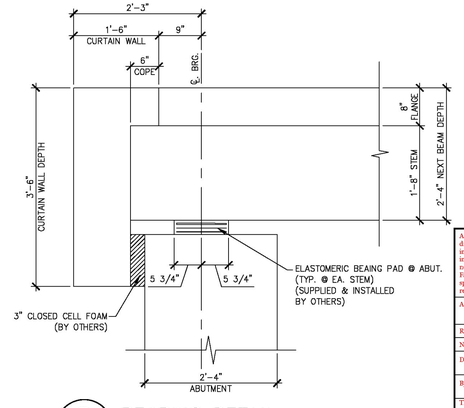

B F1 BEARING DETAIL
3/4" = 1'-0"

APPROVED: Approval of drawings and/or procedures indicates concurrence with the information presented and does not relieve the Contractor or Fabricator of compliance with all specifications and code requirements
x
APPROVED AS NOTED
REVISE AND RESUBMIT
NOT REVIEWED
Date: 3/27/2015
By: Michael J. Chenette

This review by Stantec Consulting Services Inc. is for the sole purpose of ascertaining conformance with the general design concept. This review shall not mean that Stantec Consulting Services Inc approves the detail design inherent in the shop drawings, responsibility for which shall remain with the Contractor. Submitting same, and such review shall not relieve the Contractor of his responsibility for errors or omissions in the shop drawing or of his responsibility for meeting all requirements of the Contract Documents. The contractor is responsible for dimensions to be confirmed and correlated at the job site, for information that pertains solely to the fabrication processes or to techniques of construction and installation and for coordination of the work of all subtrades.

Stantec

APPROVAL STAMP:

J.P. CARRARA & SONS INC.
Precast & Prestress Manufacturer
2464 CASE STR., MIDDLEBURY, VERMONT 05753 Phone:(802)388-6361 Fax:(802)388-9010

AUSTIN CONSTRUCTION, INC.
CONTRACTOR
CONCORD, VERMONT

STATE OF VERMONT AGENCY OF TRANSPORTATION
COUNTY OF ORANGE

TOWN OF CORINTH
CHICKEN FARM ROAD T.H.16 CLASS 3 LOCAL ROAD
BRIDGE NO.: 36 PROJECT NO.: BRO 1447 (29)

PRESTRESSED NEXT BEAM LAYOUT

DATE: MAR. 13, 2015
SCALE: NOTED
CHKD: RM DFTM: PSS
JOB NO: 23448-014
DWG. NO: F1

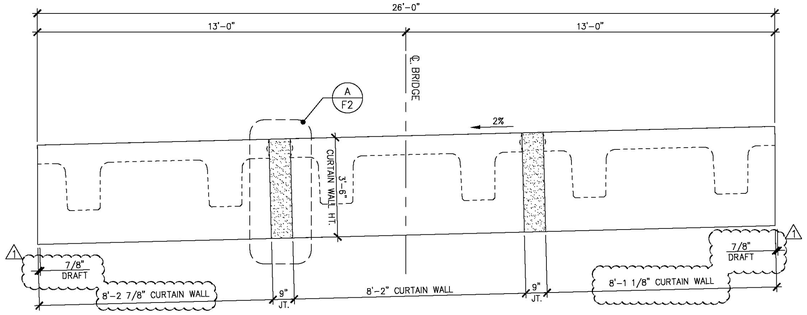

1 / F2 CURTAIN WALL ELEVATION – ABUTMENT #1 (MARK END)

3/8" = 1'-0"

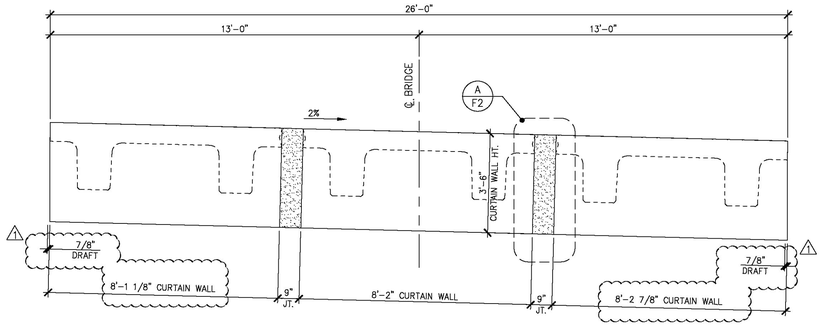

2 / F2 CURTAIN WALL ELEVATION – ABUTMENT #2 (NON–MARK END)

3/8" = 1'-0"

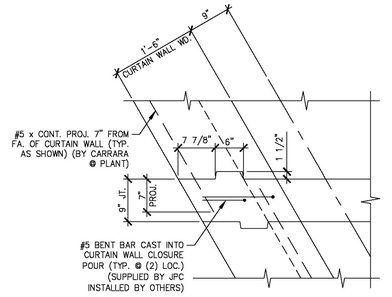

PLAN

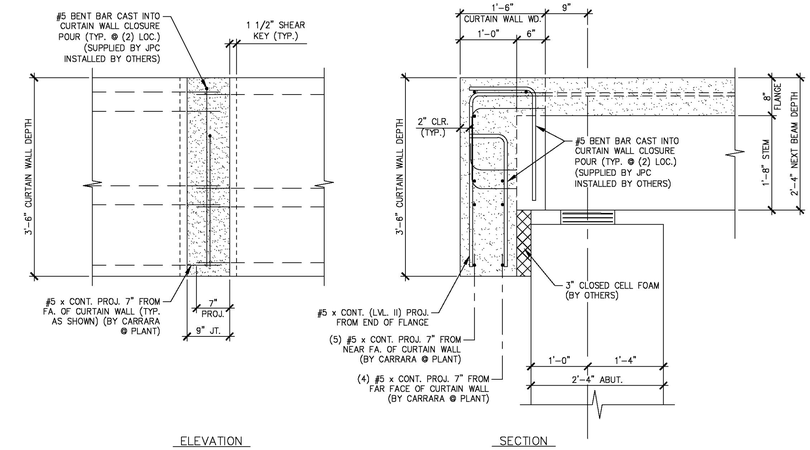

ELEVATION SECTION

A / F2 CURTAIN WALL CLOSURE POUR DETAILS

3/4" = 1'-0"

APPROVED: Approval of drawings and/or procedures indicates concurrence with the information presented and does not relieve the Contractor or Fabricator of compliance with all specifications and code requirements	x	Stantec
APPROVED AS NOTED		
REVISE AND RESUBMIT		
NOT REVIEWED		

Date: 3/27/2015

By: Michael J. Chenette

This review by Stantec Consulting Services Inc. is for the sole purpose of ascertaining conformance with the general design concept. This review shall not mean that Stantec Consulting Services Inc approves the detail design inherent in the shop drawings, responsibility for which shall remain with the Contractor. Submitting same, and such review shall not relieve the Contractor of his responsibility for errors or omissions in the shop drawing or of his responsibility for meeting all requirements of the Contract Documents. The contractor is responsible for dimensions to be confirmed and correlated at the job site, for information that pertains solely to the fabrication processes or to techniques of construction and installation and for coordination of the work of all subtrades.

⚠ 03–13–15 REVISED PER EOR COMMENTS

APPROVAL STAMP:

J.P. CARRARA & SONS INC.
Precast & Prestress Manufacturer
2464 CASE STR., MIDDLEBURY, VERMONT 05753 Phone:(802)388–6361 Fax:(802)388–9010

AUSTIN CONSTRUCTION, INC.
CONTRACTOR
CONCORD, VERMONT

STATE OF VERMONT AGENCY OF TRANSPORTATION
COUNTY OF ORANGE

TOWN OF CORINTH
CHICKEN FARM ROAD T.H.16 CLASS 3 LOCAL ROAD
BRIDGE NO.: 36 PROJECT NO.: BRO 1447 (29)

CURTAIN WALL ELEVATIONS

DATE: MAR. 13, 2015
SCALE: NOTED
CHKD: RM DFTM: PSS
JOB NO: 23448–014
DWG. NO: F2

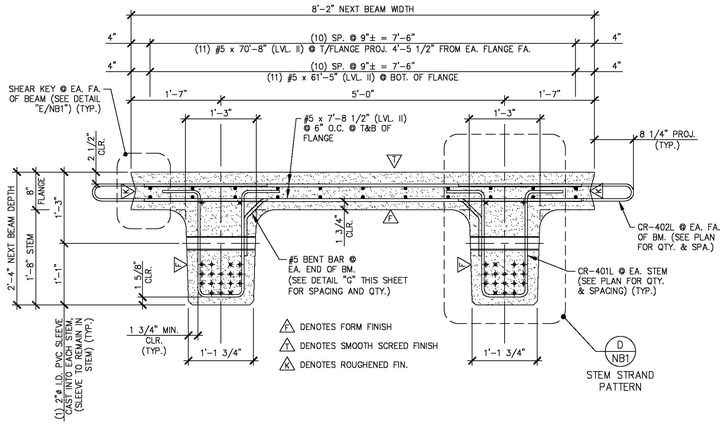

A NB1 DIMENSIONAL & REINFORCING SECTION

3/4" = 1'-0"

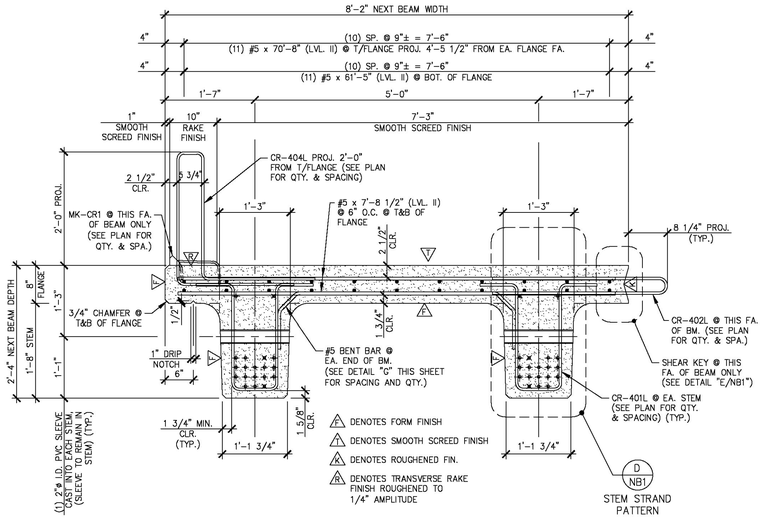

B NB1 DIMENSIONAL & REINFORCING SECTION

3/4" = 1'-0"

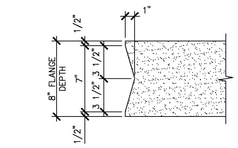

E NB1 SHEAR KEY DETAIL

1 1/2" = 1'-0"

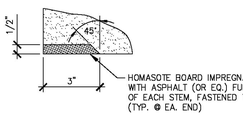

F NB1 HOMASOTE DETAIL

3" = 1'-0"

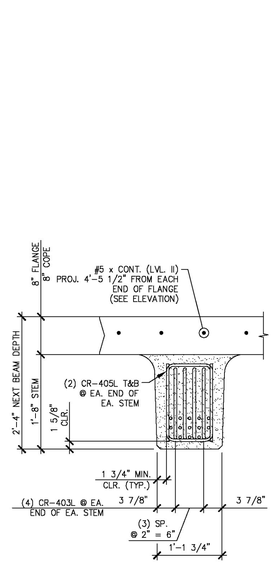

STEM SECTION

STEM ELEVATION

C NB1 END BLOCK STEM REINFORCING DETAILS

SEE CURTAIN WALL DETAILS FOR PROJECTING BAR BENDING & PROJECTING STRAND BENDING ("A/NB1.1").

3/4" = 1'-0"

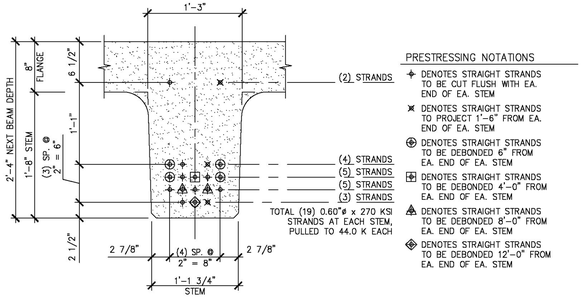

D NB1 STEM STRAND PATTERN

1" = 1'-0"

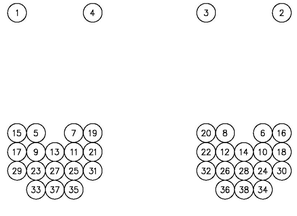

DETENSIONING SCHEDULE

N.T.S.

1 4 3 2

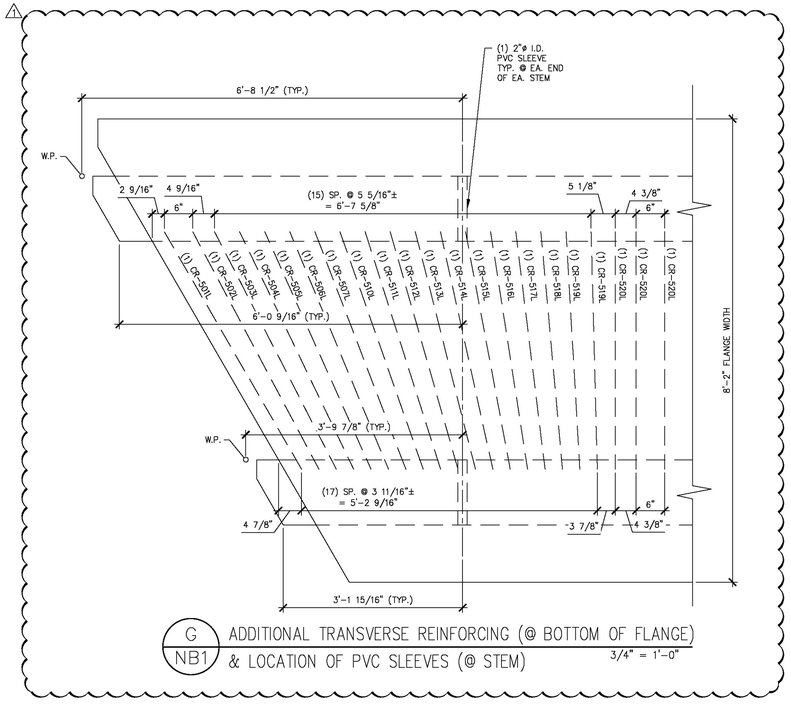

G NB1 ADDITIONAL TRANSVERSE REINFORCING (@ BOTTOM OF FLANGE) & LOCATION OF PVC SLEEVES (@ STEM)

3/4" = 1'-0"

APPROVED: Approval of drawings and/or procedures indicates concurrence with the information presented and does not relieve the Contractor or Fabricator of compliance with all specifications and code requirements — x

APPROVED AS NOTED

REVISE AND RESUBMIT

NOT REVIEWED

Date: 3/27/2015

By: Michael J. Chenette

This review by Stantec Consulting Services Inc. is for the sole purpose of ascertaining conformance with the general design concept. This review shall not mean that Stantec Consulting Services Inc approves the detail design inherent in the shop drawings, responsibility for which shall remain with the Contractor. Submitting same, and such review shall not relieve the Contractor of his responsibility for errors or omissions in the shop drawing or of his responsibility for meeting all requirements of the Contract Documents. The contractor is responsible for dimensions to be confirmed and correlated at the job site, for information that pertains solely to the fabrication processes or to techniques of construction and installation and for coordination of the work of all subtrades.

Stantec

1 03-13-15 REVISED PER EOR COMMENTS

APPROVAL STAMP:

J.P. CARRARA & SONS INC.
Precast & Prestress Manufacturer
2464 CASE STR., MIDDLEBURY, VERMONT 05753 Phone:(802)388-6361 Fax:(802)388-9010

AUSTIN CONSTRUCTION, INC.
CONTRACTOR
CONCORD, VERMONT

STATE OF VERMONT AGENCY OF TRANSPORTATION
COUNTY OF ORANGE

TOWN OF CORINTH
CHICKEN FARM ROAD T.H.16 CLASS 3 LOCAL ROAD
BRIDGE NO.: 36 PROJECT NO.: BRO 1447 (29)

PRESTRESSED NEXT BEAM DETAILS

DATE: MAR. 13, 2015
SCALE: NOTED
CHKD: RM DFTM: PSS
JOB NO: 23448-014
DWG. NO: NB1

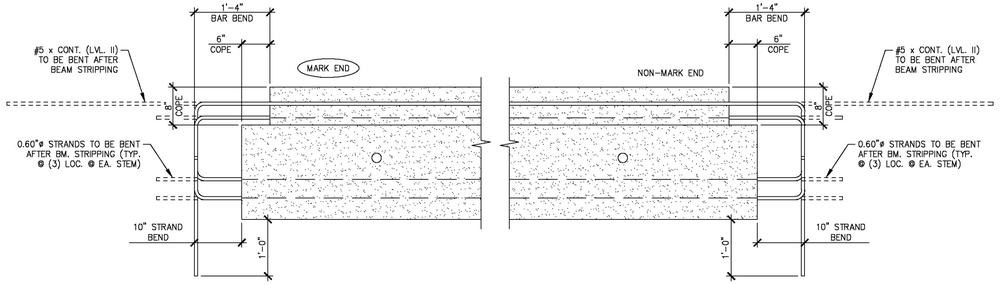

A NB1.1 PROJECTING STRAND & PROJECTING BAR BEND DETAIL

3/4" = 1'-0"

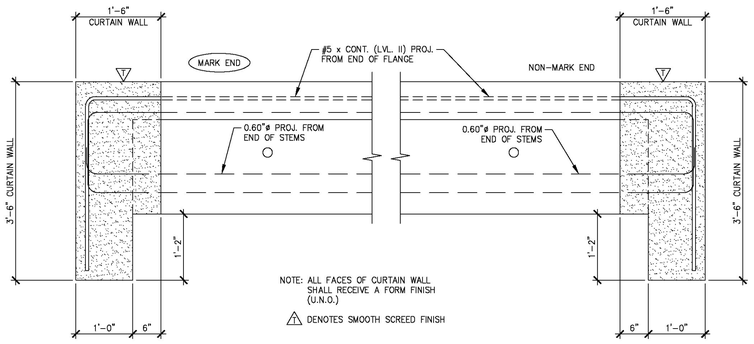

B NB1.1 CURTAIN WALL DIMENSIONAL SECTIONS

3/4" = 1'-0"

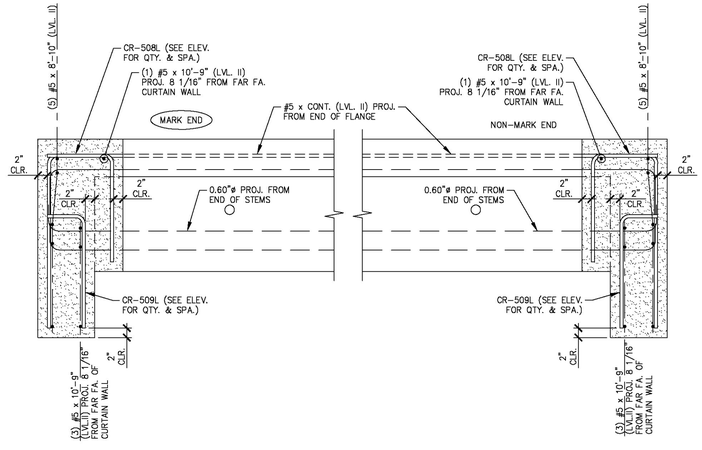

C NB1.1 CURTAIN WALL REINFORCING SECTIONS

SEE CURTAIN WALL ELEVATIONS FOR LONGITUDINAL BAR LENGTH CHANGES

3/4" = 1'-0"

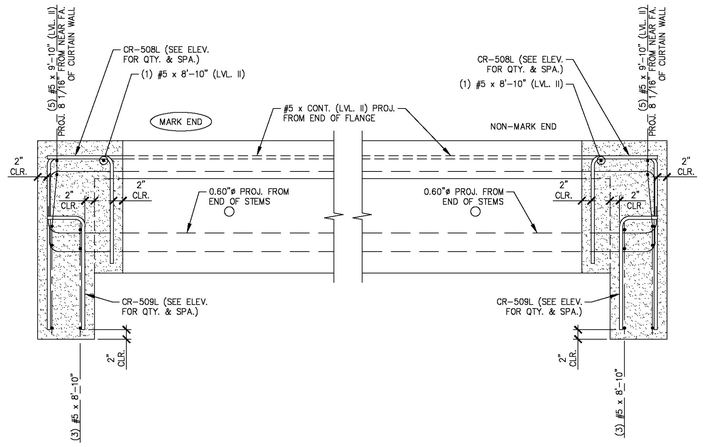

D NB1.1 CURTAIN WALL REINFORCING SECTIONS

SEE CURTAIN WALL ELEVATIONS FOR LONGITUDINAL BAR LENGTH CHANGES

3/4" = 1'-0"

APPROVED: Approval of drawings and/or procedures indicates concurrence with the information presented and does not relieve the Contractor or Fabricator of compliance with all specifications and code requirements	x	Stantec
APPROVED AS NOTED		
REVISE AND RESUBMIT		
NOT REVIEWED		

Date: 3/27/2015

By: Michael J. Chenette

This review by Stantec Consulting Services Inc. is for the sole purpose of ascertaining conformance with the general design concept. This review shall not mean that Stantec Consulting Services Inc approves the detail design inherent in the shop drawings, responsibility for which shall remain with the Contractor. Submitting same, and such review shall not relieve the Contractor of his responsibility for errors or omissions in the shop drawing or of his responsibility for meeting all requirements of the Contract Documents. The contractor is responsible for dimensions to be confirmed and correlated at the job site, for information that pertains solely to the fabrication processes or to techniques of construction and installation and for coordination of the work of all subtrades.

APPROVAL STAMP:

J.P. CARRARA & SONS INC.
Precast & Prestress Manufacturer
2464 CASE STR., MIDDLEBURY, VERMONT 05753 Phone:(802)388-6361 Fax:(802)388-9010

AUSTIN CONSTRUCTION, INC.
CONTRACTOR
CONCORD, VERMONT

STATE OF VERMONT AGENCY OF TRANSPORTATION
COUNTY OF ORANGE

DATE: MAR. 13, 2015
SCALE: NOTED

TOWN OF CORINTH
CHICKEN FARM ROAD T.H.16 CLASS 3 LOCAL ROAD
BRIDGE NO.: 36 PROJECT NO.: BRO 1447 (29)

CHKD: RM DFTM: PSS
JOB NO: 23448-014

PRECAST CURTAIN WALL DETAILS

DWG. NO: NB1.1

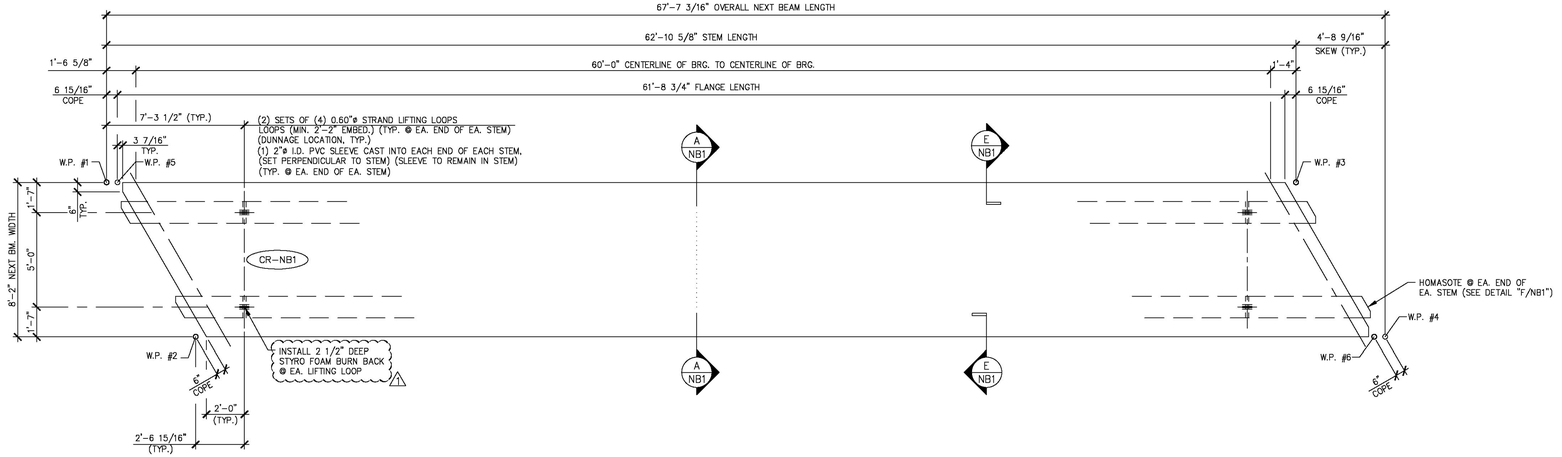

1 NB2 DIMENSIONAL PLAN VIEW IN FORM

1/4" = 1'-0"

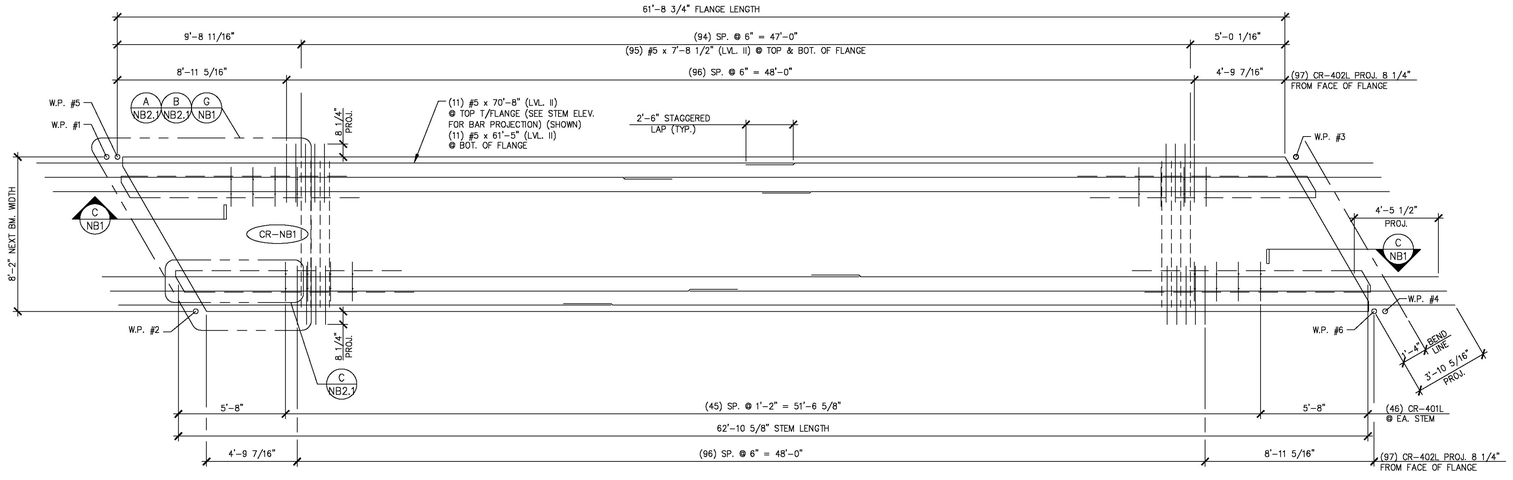

2 NB2 REINFORCING PLAN VIEW IN FORM

1/4" = 1'-0"

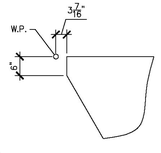

A NB2 ACUTE CORNER BLOCKOUT DETAIL (FOR FLANGE)

1/2" = 1'-0"

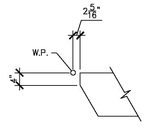

B NB2 ACUTE CORNER BLOCKOUT DETAIL (FOR STEM)

1/2" = 1'-0"

MARK: CR-NB1	QTY.: 1	WT.: 44.20 T	VOL.: 21.82 cy

MATERIAL LIST / NEXT BEAM

ITEM	MARK	DESCRIPTION	QTY.
1	CR-401L	#4 BENT BAR (LEVEL II, DUAL COATED)	124
2	CR-402L	#4 BENT BAR (LEVEL II, DUAL COATED)	194
3	CR-403L	#4 BENT BAR (LEVEL II, DUAL COATED)	16
4	CR-405L	#4 BENT BAR (LEVEL II, DUAL COATED)	16
5	CR-406L	#4 BENT BAR (LEVEL II, DUAL COATED)	8
6	CR-407L	#4 BENT BAR (LEVEL II, DUAL COATED)	4
7	CR-408L	#4 BENT BAR (LEVEL II, DUAL COATED)	4
8	CR-409L	#4 BENT BAR (LEVEL II, DUAL COATED)	4
9	CR-411L	#4 BENT BAR (LEVEL II, DUAL COATED)	12
10	CR-412L	#4 BENT BAR (LEVEL II, DUAL COATED)	12
11	CR-413L	#4 BENT BAR (LEVEL II, DUAL COATED)	10
12	CR-414L	#4 BENT BAR (LEVEL II, DUAL COATED)	8
13	CR-415L	#4 BENT BAR (LEVEL II, DUAL COATED)	4
14	CR-416L	#4 BENT BAR (LEVEL II, DUAL COATED)	6
15	CR-501L	#5 BENT BAR (LEVEL II, DUAL COATED)	2
16	CR-502L	#5 BENT BAR (LEVEL II, DUAL COATED)	2
17	CR-503L	#5 BENT BAR (LEVEL II, DUAL COATED)	2
18	CR-504L	#5 BENT BAR (LEVEL II, DUAL COATED)	2
19	CR-505L	#5 BENT BAR (LEVEL II, DUAL COATED)	2
20	CR-506L	#5 BENT BAR (LEVEL II, DUAL COATED)	2
21	CR-507L	#5 BENT BAR (LEVEL II, DUAL COATED) ⚠1	2
22	CR-510L	#5 BENT BAR (LEVEL II, DUAL COATED)	2
23	CR-511L	#5 BENT BAR (LEVEL II, DUAL COATED)	2
24	CR-512L	#5 BENT BAR (LEVEL II, DUAL COATED)	2
25	CR-513L	#5 BENT BAR (LEVEL II, DUAL COATED)	2
26	CR-514L	#5 BENT BAR (LEVEL II, DUAL COATED)	2
27	CR-515L	#5 BENT BAR (LEVEL II, DUAL COATED)	2
28	CR-516L	#5 BENT BAR (LEVEL II, DUAL COATED)	2
29	CR-517L	#5 BENT BAR (LEVEL II, DUAL COATED)	2
30	CR-518L	#5 BENT BAR (LEVEL II, DUAL COATED)	2
31	CR-519L	#5 BENT BAR (LEVEL II, DUAL COATED)	4
32	CR-520L	#5 BENT BAR (LEVEL II, DUAL COATED)	6
33		#4 x 8'-11" (LEVEL II, DUAL COATED)	18
34		#5 x 7'-8 1/2" (LEVEL II, DUAL COATED)	202
35		#5 x 7'-9" (LEVEL II, DUAL COATED)	8
36		#5 x 7'-10" (LEVEL II, DUAL COATED)	8
37		#5 x 7'-11" (LEVEL II, DUAL COATED)	8
38		#5 x 8'-0" (LEVEL II, DUAL COATED)	4
39		#5 x 8'-1" (LEVEL II, DUAL COATED)	4
40		#5 x 8'-2" (LEVEL II, DUAL COATED)	4
41		#5 x 8'-3" (LEVEL II, DUAL COATED)	4
42		#5 x 8'-4" (LEVEL II, DUAL COATED)	4
43		#5 x 8'-5" (LEVEL II, DUAL COATED)	4
44		#5 x 8'-7" (LEVEL II, DUAL COATED)	4
45		#5 x 8'-8" (LEVEL II, DUAL COATED)	8
46		#5 x 8'-9" (LEVEL II, DUAL COATED)	4
47		#5 x 70'-8" (W/ (1) 2'-6" STAGGERED LAP) (40' + 33'-2") (LVL. II, DUAL COATED)	11
48		#5 x 61'-5" (W/ (1) 2'-6" STAGGERED LAP) (40' + 23'-11") (LVL. II, DUAL COATED)	11
49			
50		2"ø I.D. PVC SLEEVE	4
51		SET OF (4) 0.60"ø x 270 KSI STRAND LIFTING LOOPS	4
52			

APPROVED: Approval of drawings and/or procedures indicates concurrence with the information presented and does not relieve the Contractor or Fabricator of compliance with all specifications and code requirements	X	Stantec
APPROVED AS NOTED		
REVISE AND RESUBMIT		
NOT REVIEWED		
Date: 3/27/2015		
By: Michael J. Chenette		

This review by Stantec Consulting Services Inc. is for the sole purpose of ascertaining conformance with the general design concept. This review shall not mean that Stantec Consulting Services Inc approves the detail design inherent in the shop drawings, responsibility for which shall remain with the Contractor. Submitting same, and such review shall not relieve the Contractor of his responsibility for errors or omissions in the shop drawing or of his responsibility for meeting all requirements of the Contract Documents. The contractor is responsible for dimensions to be confirmed and correlated at the job site, for information that pertains solely to the fabrication processes or to techniques of construction and installation and for coordination of the work of all subtrades.

⚠1 03-13-15 REVISED PER EOR COMMENTS

APPROVAL STAMP:

J.P. CARRARA & SONS INC.
Precast & Prestress Manufacturer
2464 CASE STR., MIDDLEBURY, VERMONT 05753 Phone:(802)388-6361 Fax:(802)388-9010

AUSTIN CONSTRUCTION, INC.
CONTRACTOR
CONCORD, VERMONT

STATE OF VERMONT AGENCY OF TRANSPORTATION
COUNTY OF ORANGE

TOWN OF CORINTH
CHICKEN FARM ROAD T.H.16 CLASS 3 LOCAL ROAD
BRIDGE NO.: 36 PROJECT NO.: BRO 1447 (29)

PRESTRESSED NEXT BEAM DETAILS

DATE: MAR. 13, 2015
SCALE: NOTED
CHKD: RM DFTM: PSS
JOB NO: 23448-014
DWG. NO: NB2

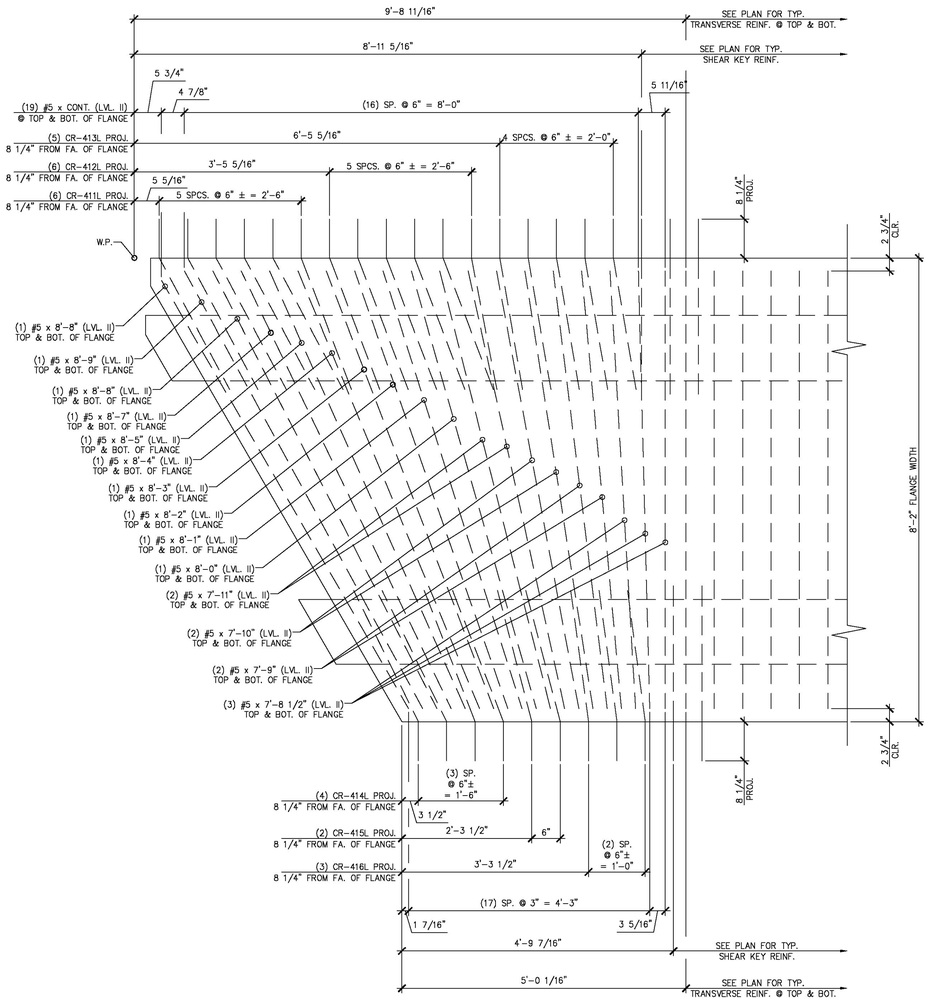

A NB2.1 BEAM END TRANSVERSE REINFORCING

3/4" = 1'-0"

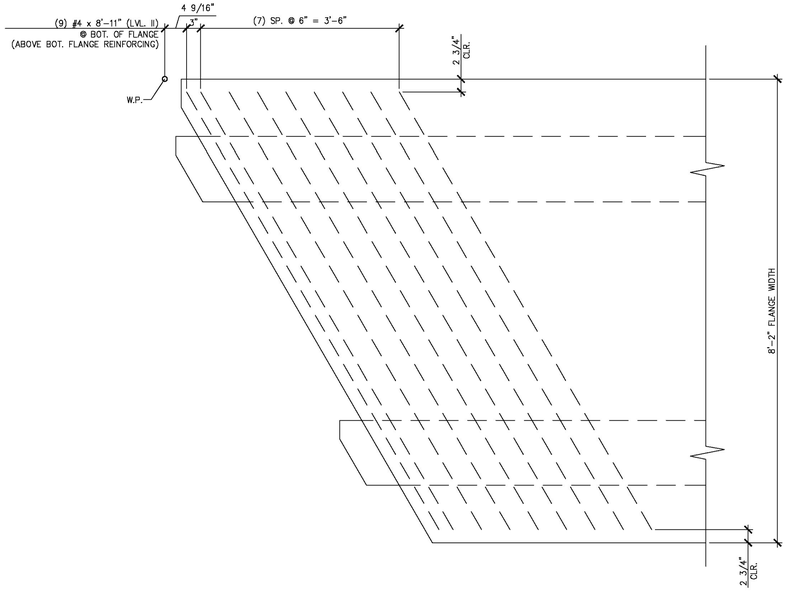

B NB2.1 ADDITIONAL TRANSVERSE REINFORCING AT BOTTOM OF FLANGE

3/4" = 1'-0"

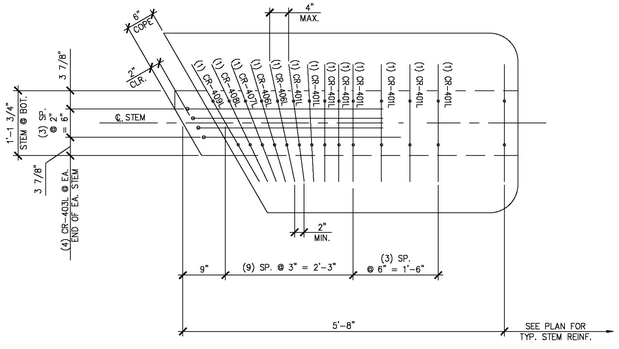

C NB2.1 BEAM END TRANSVERSE REINFORCING

3/4" = 1'-0"

APPROVED: Approval of drawings and/or procedures indicates concurrence with the information presented and does not relieve the Contractor or Fabricator of compliance with all specifications and code requirements	x	Stantec
APPROVED AS NOTED		
REVISE AND RESUBMIT		
NOT REVIEWED		
Date: 3/27/2015		
By: Michael J. Chenette		

This review by Stantec Consulting Services Inc. is for the sole purpose of ascertaining conformance with the general design concept. This review shall not mean that Stantec Consulting Services Inc approves the detail design inherent in the shop drawings, responsibility for which shall remain with the Contractor. Submitting same, and such review shall not relieve the Contractor of his responsibility for errors or omissions in the shop drawing or of his responsibility for meeting all requirements of the Contract Documents. The contractor is responsible for dimensions to be confirmed and correlated at the job site, for information that pertains solely to the fabrication processes or to techniques of construction and installation and for coordination of the work of all subtrades.

APPROVAL STAMP:

J.P. CARRARA & SONS INC.
Precast & Prestress Manufacturer
2464 CASE STR., MIDDLEBURY, VERMONT 05753 Phone:(802)388-6361 Fax:(802)388-9010

AUSTIN CONSTRUCTION, INC.
CONTRACTOR
CONCORD, VERMONT

STATE OF VERMONT AGENCY OF TRANSPORTATION
COUNTY OF ORANGE

DATE: MAR. 13, 2015
SCALE: NOTED

TOWN OF CORINTH
CHICKEN FARM ROAD T.H.16 CLASS 3 LOCAL ROAD
BRIDGE NO.: 36 PROJECT NO.: BRO 1447 (29)

CHKD: RM DFTM: PSS
JOB NO: 23448-014

PRESTRESSED NEXT BEAM DETAILS

DWG. NO: NB2.1

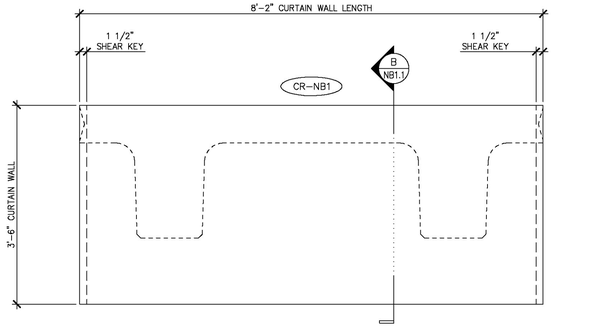

1 NB2.2 CURTAIN WALL DIMENSIONAL ELEVATION

VOL.: 1.53 cy
WT.: 3.10 T

3/4" = 1'-0"

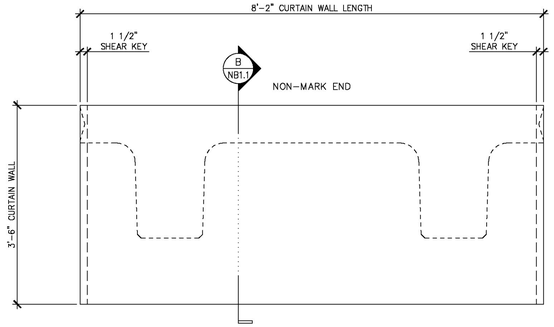

3 NB2.2 CURTAIN WALL DIMENSIONAL ELEVATION

VOL.: 1.53 cy
WT.: 3.10 T

3/4" = 1'-0"

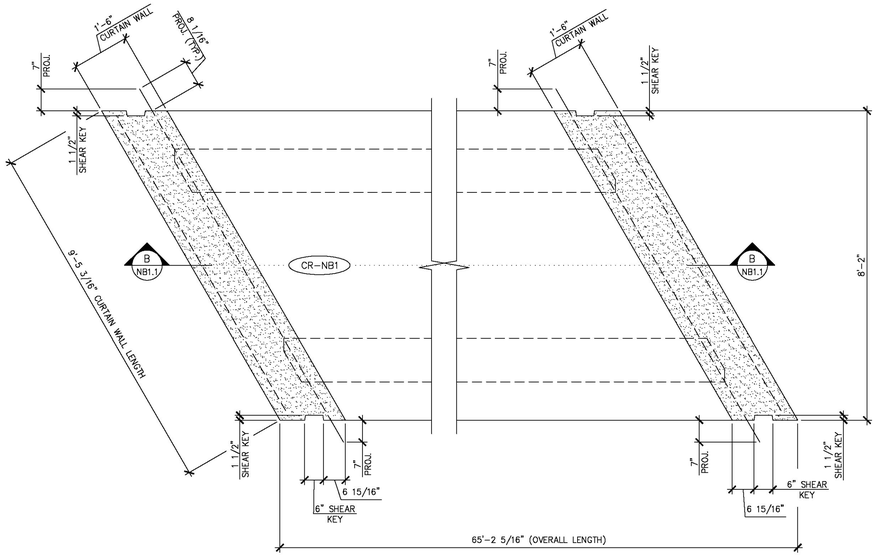

5 NB2.2 CURTAIN WALL DIMENSIONAL PLAN

1/2" = 1'-0"

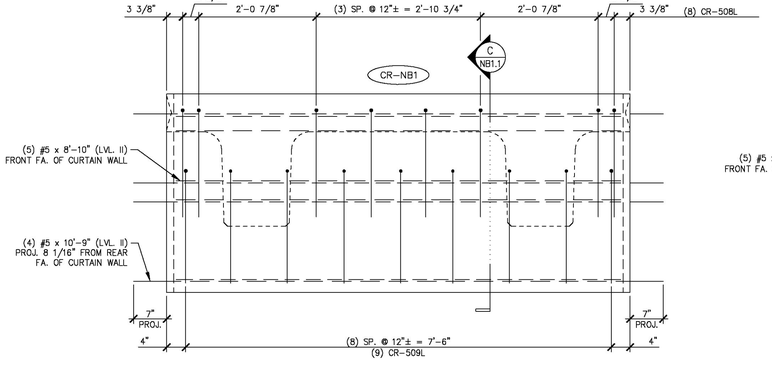

2 NB2.2 CURTAIN WALL REINFORCING ELEVATION

3/4" = 1'-0"

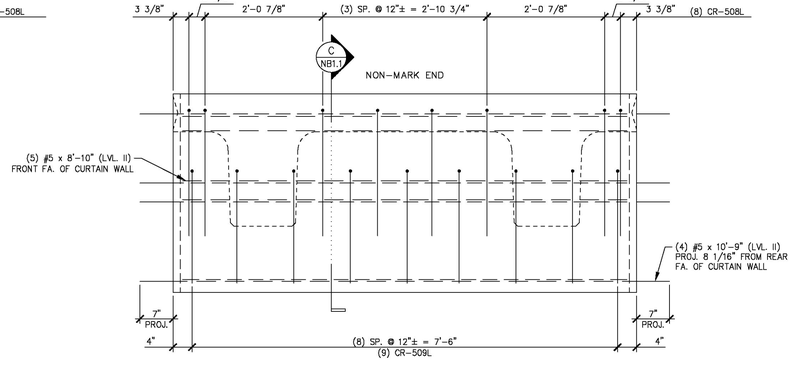

4 NB2.2 CURTAIN WALL REINFORCING ELEVATION

3/4" = 1'-0"

44.20 T = NEXT BEAM
3.10 T = CURTAIN WALL (MARK END)
3.10 T = CURTAIN WALL (NON-MARK END)
50.40 T = TOTAL BEAM WT.

MARK: CR-NB1 | QTY.: 1

MATERIAL LIST / CURTAIN WALL

ITEM	MARK	DESCRIPTION	QTY./CURTAIN WALL	
			MARK END	NON-MARK END
1	CR-508L	#5 BENT BAR (LEVEL II, DUAL COATED)	8	8
2	CR-509L	#5 BENT BAR (LEVEL II, DUAL COATED)	9	9
3				
4		#5 x 10'-9" (LVL. II, DUAL COATED)	4	4
5		#5 x 8'-10" (LVL. II, DUAL COATED)	5	5
6				
7				
8				
9				
10				

APPROVED: Approval of drawings and/or procedures indicates concurrence with the information presented and does not relieve the Contractor or Fabricator of compliance with all specifications and code requirements	x	Stantec
APPROVED AS NOTED		
REVISE AND RESUBMIT		
NOT REVIEWED		

Date: 3/27/2015

By: Michael J. Chenette

This review by Stantec Consulting Services Inc. is for the sole purpose of ascertaining conformance with the general design concept. This review shall not mean that Stantec Consulting Services Inc approves the detail design inherent in the shop drawings, responsibility for which shall remain with the Contractor. Submitting same, and such review shall not relieve the Contractor of his responsibility for errors or omissions in the shop drawing or of his responsibility for meeting all requirements of the Contract Documents. The contractor is responsible for dimensions to be confirmed and correlated at the job site, for information that pertains solely to the fabrication processes or to techniques of construction and installation and for coordination of the work of all subtrades.

APPROVAL STAMP:

J.P. CARRARA & SONS INC.
Precast & Prestress Manufacturer
2464 CASE STR., MIDDLEBURY, VERMONT 05753 Phone:(802)388-6361 Fax:(802)388-9010

AUSTIN CONSTRUCTION, INC.
CONTRACTOR
CONCORD, VERMONT

STATE OF VERMONT AGENCY OF TRANSPORTATION
COUNTY OF ORANGE

TOWN OF CORINTH
CHICKEN FARM ROAD T.H.16 CLASS 3 LOCAL ROAD
BRIDGE NO.: 36 PROJECT NO.: BRO 1447 (29)

PRECAST CURTAIN WALL DETAILS

DATE: MAR. 13, 2015
SCALE: NOTED
CHKD: RM | DFTM: PSS
JOB NO: 23448-014
DWG. NO: NB2.2

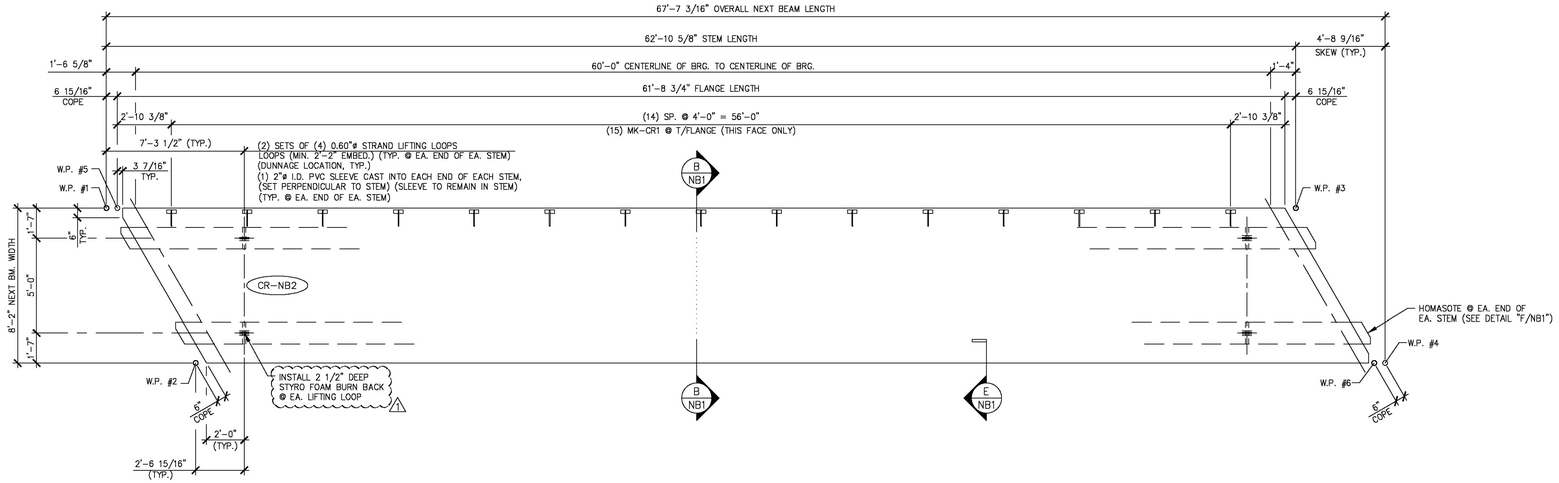

1 / NB3 DIMENSIONAL PLAN VIEW IN FORM

1/4" = 1'-0"

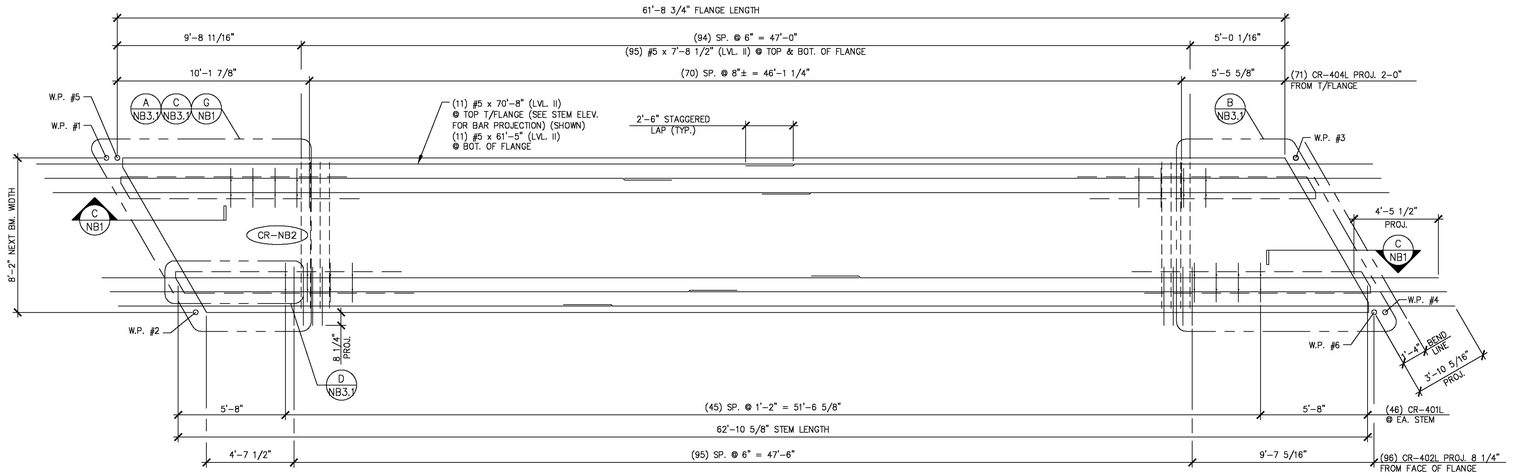

2 / NB3 REINFORCING PLAN VIEW IN FORM

1/4" = 1'-0"

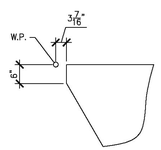

A / NB3 ACUTE CORNER BLOCKOUT DETAIL (FOR FLANGE)

1/2" = 1'-0"

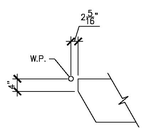

B / NB3 ACUTE CORNER BLOCKOUT DETAIL (FOR STEM)

1/2" = 1'-0"

MARK: CR-NB2	QTY.: 1	WT.: 44.27 T	VOL.: 21.86 cy

MATERIAL LIST / NEXT BEAM

ITEM	MARK	DESCRIPTION	QTY.
1	CR-401L	#4 BENT BAR (LEVEL II, DUAL COATED)	124
2	CR-402L	#4 BENT BAR (LEVEL II, DUAL COATED)	96
3	CR-403L	#4 BENT BAR (LEVEL II, DUAL COATED)	16
4	CR-404L	#4 BENT BAR (LEVEL II, DUAL COATED)	81
5	CR-405L	#4 BENT BAR (LEVEL II, DUAL COATED)	16
6	CR-406L	#4 BENT BAR (LEVEL II, DUAL COATED)	8
7	CR-407L	#4 BENT BAR (LEVEL II, DUAL COATED)	4
8	CR-408L	#4 BENT BAR (LEVEL II, DUAL COATED)	4
9	CR-409L	#4 BENT BAR (LEVEL II, DUAL COATED)	4
10	CR-410L	#4 BENT BAR (LEVEL II, DUAL COATED)	12
11	CR-414L	#4 BENT BAR (LEVEL II, DUAL COATED)	4
12	CR-415L	#4 BENT BAR (LEVEL II, DUAL COATED)	8
13	CR-416L	#4 BENT BAR (LEVEL II, DUAL COATED)	2
14	CR-417L	#4 BENT BAR (LEVEL II, DUAL COATED)	6
15	CR-418L	#4 BENT BAR (LEVEL II, DUAL COATED)	6
16	CR-501L	#5 BENT BAR (LEVEL II, DUAL COATED)	2
17	CR-502L	#5 BENT BAR (LEVEL II, DUAL COATED)	2
18	CR-503L	#5 BENT BAR (LEVEL II, DUAL COATED)	2
19	CR-504L	#5 BENT BAR (LEVEL II, DUAL COATED)	2
20	CR-505L	#5 BENT BAR (LEVEL II, DUAL COATED)	2
21	CR-506L	#5 BENT BAR (LEVEL II, DUAL COATED)	2
22	CR-507L	#5 BENT BAR (LEVEL II, DUAL COATED) ⚠1	2
23	CR-510L	#5 BENT BAR (LEVEL II, DUAL COATED)	2
24	CR-511L	#5 BENT BAR (LEVEL II, DUAL COATED)	2
25	CR-512L	#5 BENT BAR (LEVEL II, DUAL COATED)	2
26	CR-513L	#5 BENT BAR (LEVEL II, DUAL COATED)	2
27	CR-514L	#5 BENT BAR (LEVEL II, DUAL COATED)	2
28	CR-515L	#5 BENT BAR (LEVEL II, DUAL COATED)	2
29	CR-516L	#5 BENT BAR (LEVEL II, DUAL COATED)	2
30	CR-517L	#5 BENT BAR (LEVEL II, DUAL COATED)	2
31	CR-518L	#5 BENT BAR (LEVEL II, DUAL COATED)	2
32	CR-519L	#5 BENT BAR (LEVEL II, DUAL COATED)	4
33	CR-520L	#5 BENT BAR (LEVEL II, DUAL COATED)	6
34			
35		#4 x 8'-11" (LEVEL II, DUAL COATED)	18
36		#5 x 7'-8 1/2" (LEVEL II, DUAL COATED)	202
37		#5 x 7'-9" (LEVEL II, DUAL COATED)	8
38		#5 x 7'-10" (LEVEL II, DUAL COATED)	8
39		#5 x 7'-11" (LEVEL II, DUAL COATED)	8
40		#5 x 8'-0" (LEVEL II, DUAL COATED)	4
41		#5 x 8'-1" (LEVEL II, DUAL COATED)	4
42		#5 x 8'-2" (LEVEL II, DUAL COATED)	4
43		#5 x 8'-3" (LEVEL II, DUAL COATED)	4
44		#5 x 8'-4" (LEVEL II, DUAL COATED)	4
45		#5 x 8'-5" (LEVEL II, DUAL COATED)	4
46		#5 x 8'-7" (LEVEL II, DUAL COATED)	4
47		#5 x 8'-8" (LEVEL II, DUAL COATED)	8
48		#5 x 8'-9" (LEVEL II, DUAL COATED)	4
49		#5 x 70'-8" (W/ (1) 2'-6" STAGGERED LAP) (40' + 33'-2") (LVL. II, DUAL COATED)	11
50		#5 x 61'-5" (W/ (1) 2'-6" STAGGERED LAP) (40' + 23'-11") (LVL. II, DUAL COATED)	11
51			
52	MK-CR1	MODIFIED UNIVERSAL 4APR DECK FORM HANGER 45° (GALV.) (20" LG.)	15
53		2"ø I.D. PVC SLEEVE	4
54		SET OF (4) 0.60"ø x 270 KSI STRAND LIFTING LOOPS	4

APPROVED: Approval of drawings and/or procedures indicates concurrence with the information presented and does not relieve the Contractor or Fabricator of compliance with all specifications and code requirements	x
APPROVED AS NOTED	
REVISE AND RESUBMIT	
NOT REVIEWED	

Stantec

Date: 3/27/2015

By: Michael J. Chenette

This review by Stantec Consulting Services Inc. is for the sole purpose of ascertaining conformance with the general design concept. This review shall not mean that Stantec Consulting Services Inc approves the detail design inherent in the shop drawings, responsibility for which shall remain with the Contractor. Submitting same, and such review shall not relieve the Contractor of his responsibility for errors or omissions in the shop drawing or of his responsibility for meeting all requirements of the Contract Documents. The contractor is responsible for dimensions to be confirmed and correlated at the job site, for information that pertains solely to the fabrication processes or to techniques of construction and installation and for coordination of the work of all subtrades.

⚠1 03-13-15 REVISED PER EOR COMMENTS

APPROVAL STAMP:

J.P. CARRARA & SONS INC.
Precast & Prestress Manufacturer
2464 CASE STR., MIDDLEBURY, VERMONT 05753 Phone:(802)388-6361 Fax:(802)388-9010

AUSTIN CONSTRUCTION, INC.
CONTRACTOR
CONCORD, VERMONT

STATE OF VERMONT AGENCY OF TRANSPORTATION
COUNTY OF ORANGE

TOWN OF CORINTH
CHICKEN FARM ROAD T.H.16 CLASS 3 LOCAL ROAD
BRIDGE NO.: 36 PROJECT NO.: BRO 1447 (29)

PRESTRESSED NEXT BEAM DETAILS

DATE: MAR. 13, 2015
SCALE: NOTED
CHKD: RM DFTM: PSS
JOB NO: 23448-014
DWG. NO: NB3

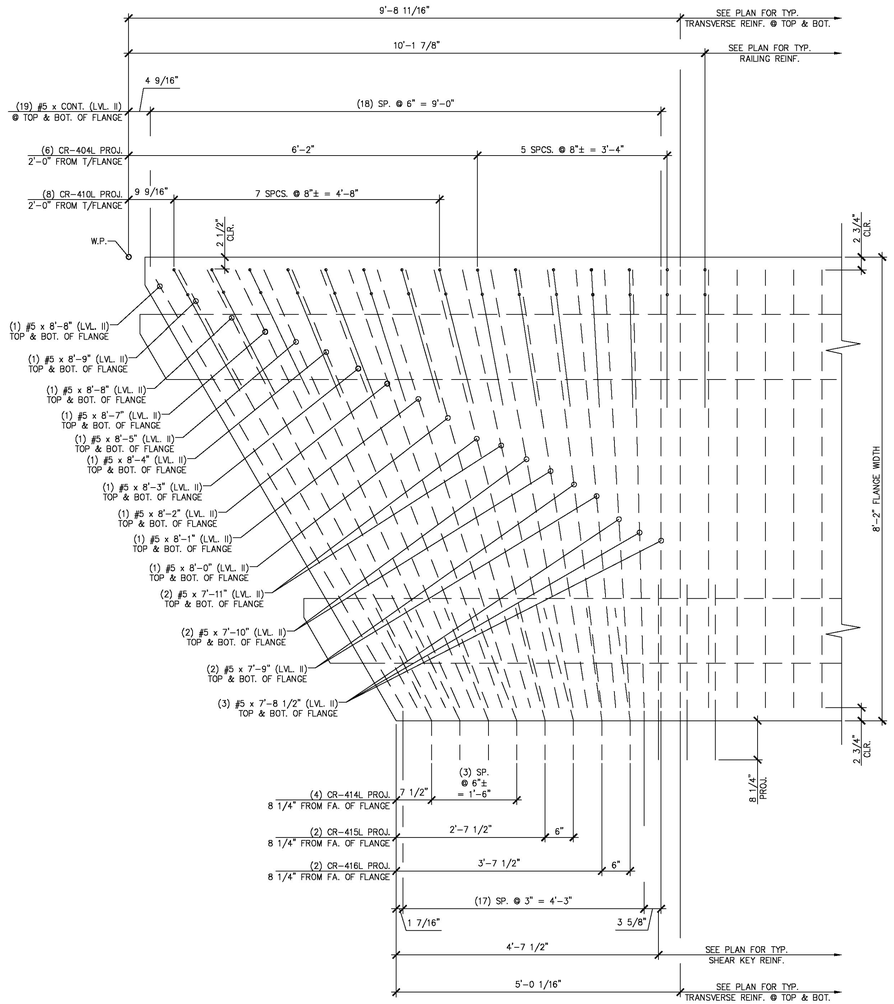

A NB3.1 BEAM END TRANSVERSE REINFORCING

3/4" = 1'-0"

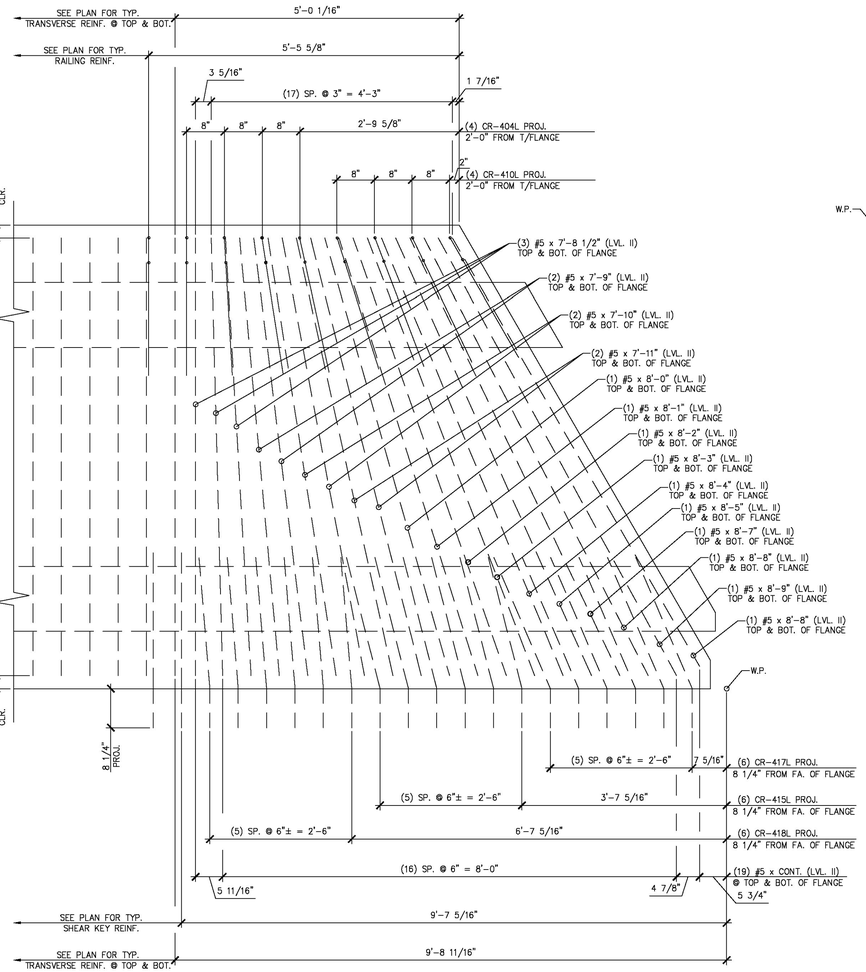

B NB3.1 BEAM END TRANSVERSE REINFORCING

3/4" = 1'-0"

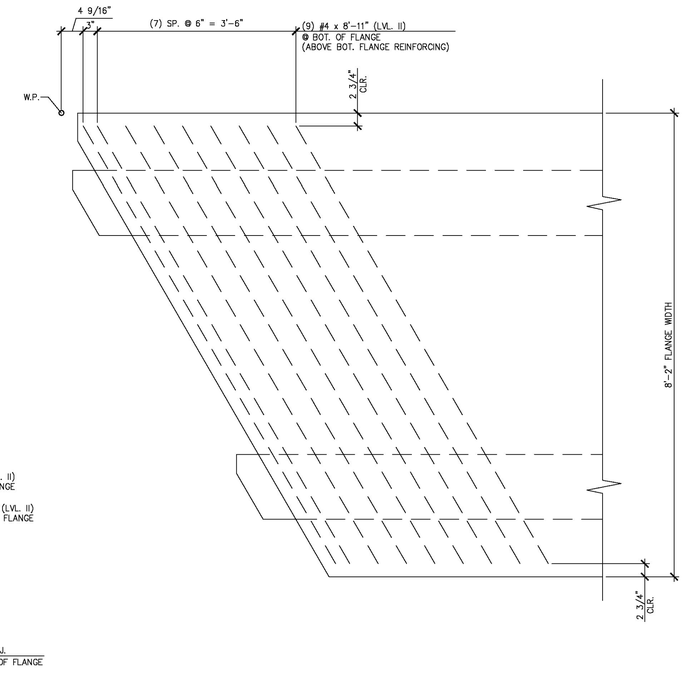

C NB3.1 ADDITIONAL TRANSVERSE REINFORCING AT BOTTOM OF FLANGE

3/4" = 1'-0"

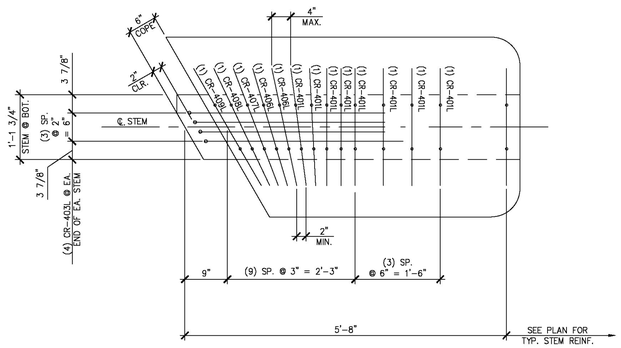

D NB3.1 BEAM END TRANSVERSE REINFORCING

3/4" = 1'-0"

APPROVED: Approval of drawings and/or procedures indicates concurrence with the information presented and does not relieve the Contractor or Fabricator of compliance with all specifications and code requirements	x	Stantec
APPROVED AS NOTED		
REVISE AND RESUBMIT		
NOT REVIEWED		

Date: 3/27/2015

By: Michael J. Chenette

This review by Stantec Consulting Services Inc. is for the sole purpose of ascertaining conformance with the general design concept. This review shall not mean that Stantec Consulting Services Inc approves the detail design inherent in the shop drawings, responsibility for which shall remain with the Contractor. Submitting same, and such review shall not relieve the Contractor of his responsibility for errors or omissions in the shop drawing or of his responsibility for meeting all requirements of the Contract Documents. The contractor is responsible for dimensions to be confirmed and correlated at the job site, for information that pertains solely to the fabrication processes or to techniques of construction and installation and for coordination of the work of all subtrades.

APPROVAL STAMP:

J.P. CARRARA & SONS INC.
Precast & Prestress Manufacturer
2464 CASE STR., MIDDLEBURY, VERMONT 05753 Phone:(802)388-6361 Fax:(802)388-9010

AUSTIN CONSTRUCTION, INC.
CONTRACTOR
CONCORD, VERMONT

STATE OF VERMONT AGENCY OF TRANSPORTATION
COUNTY OF ORANGE

TOWN OF CORINTH
CHICKEN FARM ROAD T.H.16 CLASS 3 LOCAL ROAD
BRIDGE NO.: 36 PROJECT NO.: BRO 1447 (29)

PRESTRESSED NEXT BEAM DETAILS

DATE: MAR. 13, 2015
SCALE: NOTED
CHKD: RM DFTM: PSS
JOB NO: 23448-014
DWG. NO: NB3.1

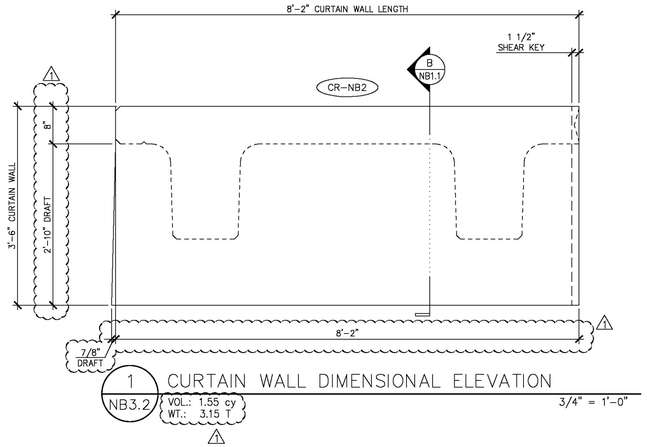

1 NB3.2 CURTAIN WALL DIMENSIONAL ELEVATION

VOL.: 1.55 cy
WT.: 3.15 T

3/4" = 1'-0"

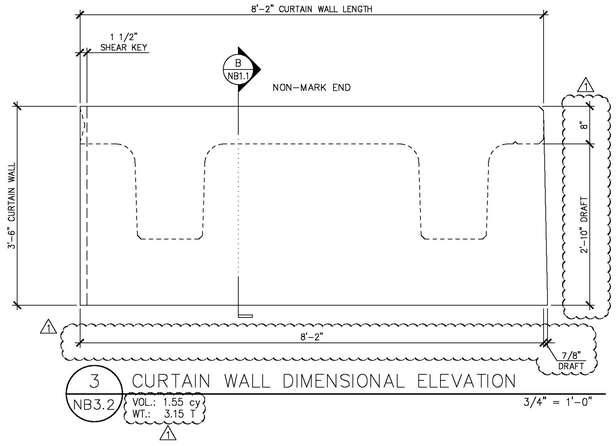

3 NB3.2 CURTAIN WALL DIMENSIONAL ELEVATION

VOL.: 1.55 cy
WT.: 3.15 T

3/4" = 1'-0"

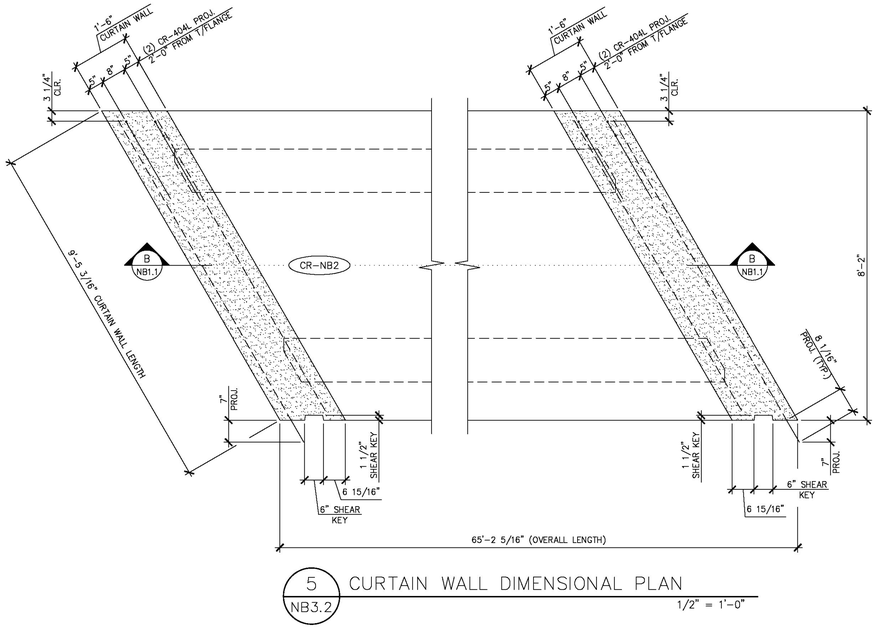

5 NB3.2 CURTAIN WALL DIMENSIONAL PLAN

1/2" = 1'-0"

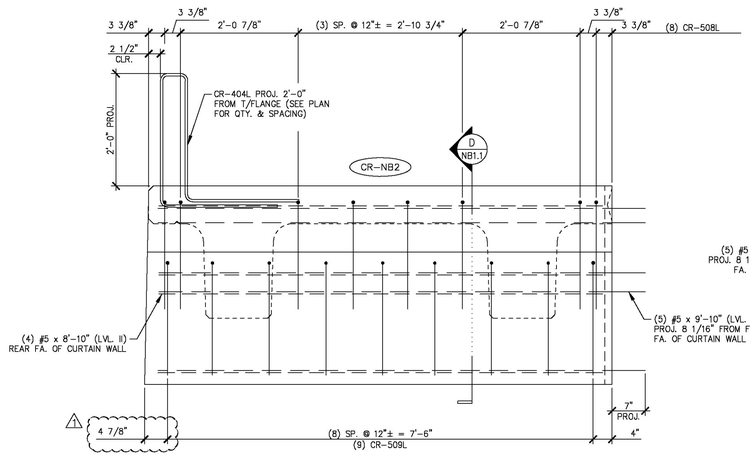

2 NB3.2 CURTAIN WALL REINFORCING ELEVATION

3/4" = 1'-0"

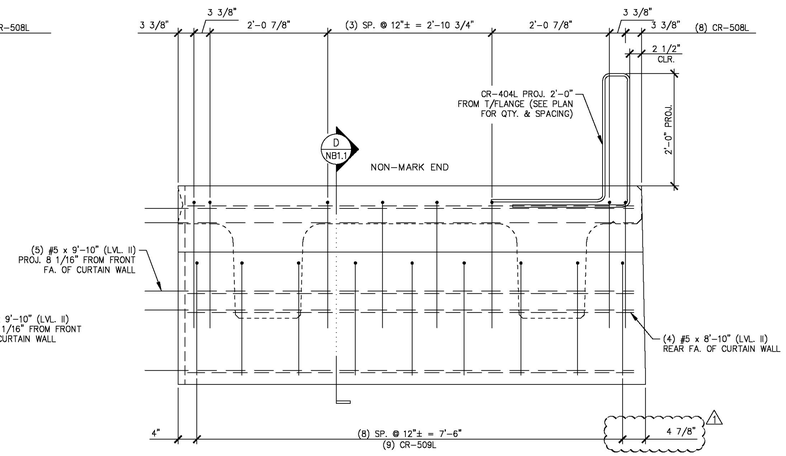

4 NB3.2 CURTAIN WALL REINFORCING ELEVATION

3/4" = 1'-0"

44.27 T = NEXT BEAM
3.15 T = CURTAIN WALL (MARK END)
3.15 T = CURTAIN WALL (NON-MARK END)
50.57 T = TOTAL BEAM WT.

MARK: CR-NB2 | QTY.: 1

MATERIAL LIST / CURTAIN WALL

ITEM	MARK	DESCRIPTION	QTY./CURTAIN WALL	
			MARK END	NON-MARK END
1	CR-404L	#4 BENT BAR (LEVEL II, DUAL COATED)	2	2
2	CR-508L	#5 BENT BAR (LEVEL II, DUAL COATED)	8	8
3	CR-509L	#5 BENT BAR (LEVEL II, DUAL COATED)	9	9
4				
5		#5 x 9'-10" (LVL. II, DUAL COATED)	5	5
6		#5 x 8'-10" (LVL. II, DUAL COATED)	4	4
7				
8				
9				
10				

APPROVED: Approval of drawings and/or procedures indicates concurrence with the information presented and does not relieve the Contractor or Fabricator of compliance with all specifications and code requirements — x
APPROVED AS NOTED
REVISE AND RESUBMIT
NOT REVIEWED

Stantec

Date: 3/27/2015

By: Michael J. Chenette

This review by Stantec Consulting Services Inc. is for the sole purpose of ascertaining conformance with the general design concept. This review shall not mean that Stantec Consulting Services Inc approves the detail design inherent in the shop drawings, responsibility for which shall remain with the Contractor. Submitting same, and such review shall not relieve the Contractor of his responsibility for errors or omissions in the shop drawing or of his responsibility for meeting all requirements of the Contract Documents. The contractor is responsible for dimensions to be confirmed and correlated at the job site, for information that pertains solely to the fabrication processes or to techniques of construction and installation and for coordination of the work of all subtrades.

⚠ 03-13-15 REVISED PER EOR COMMENTS

APPROVAL STAMP:

J.P. CARRARA & SONS INC.
Precast & Prestress Manufacturer
2464 CASE STR., MIDDLEBURY, VERMONT 05753 Phone:(802)388-6361 Fax:(802)388-9010

AUSTIN CONSTRUCTION, INC.
CONTRACTOR
CONCORD, VERMONT

STATE OF VERMONT AGENCY OF TRANSPORTATION
COUNTY OF ORANGE

TOWN OF CORINTH
CHICKEN FARM ROAD T.H.16 CLASS 3 LOCAL ROAD
BRIDGE NO.: 36 PROJECT NO.: BRO 1447 (29)

PRECAST CURTAIN WALL DETAILS

DATE: MAR. 13, 2015
SCALE: NOTED
CHKD: RM | DFTM: PSS
JOB NO: 23448-014
DWG. NO: NB3.2

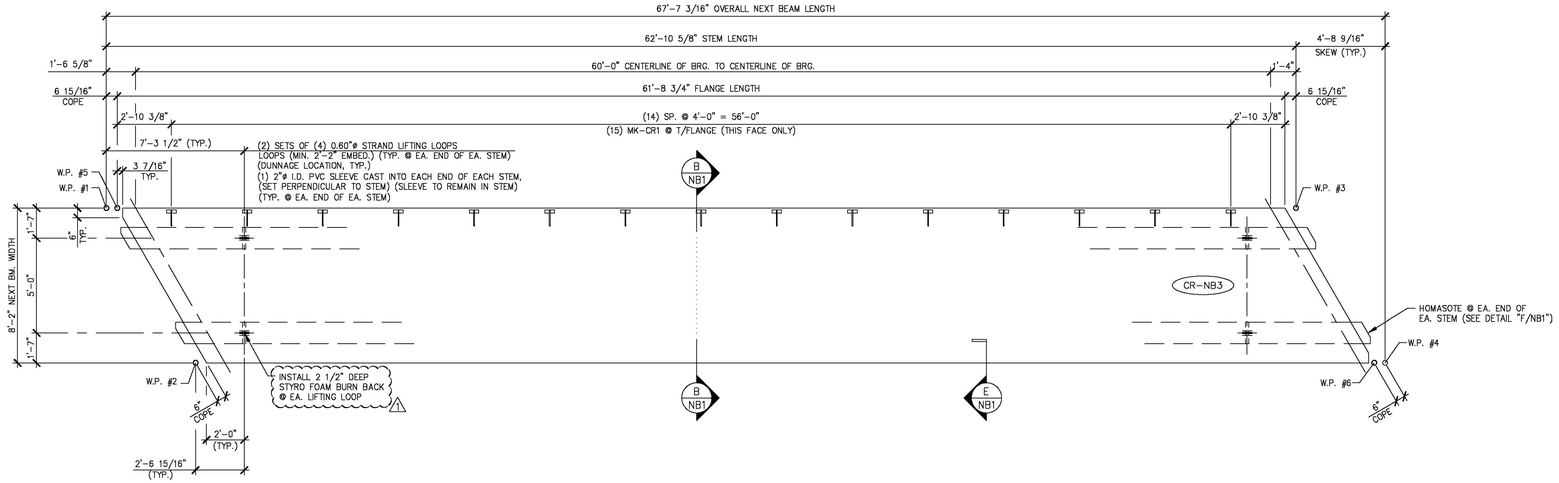

1 NB4 DIMENSIONAL PLAN VIEW IN FORM

1/4" = 1'-0"

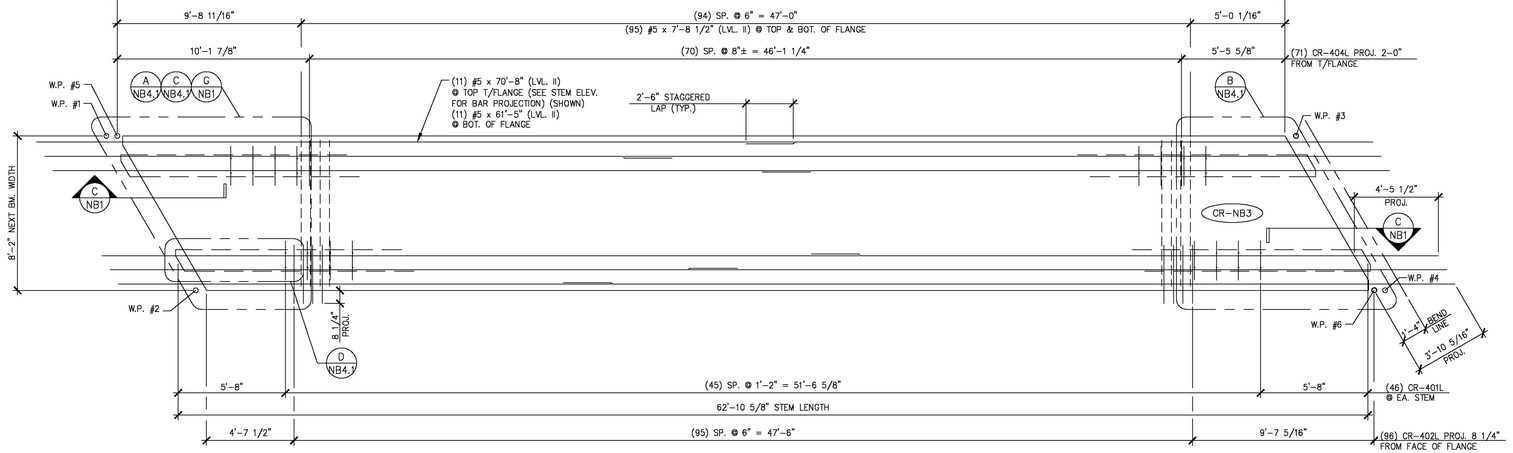

2 NB4 REINFORCING PLAN VIEW IN FORM

1/4" = 1'-0"

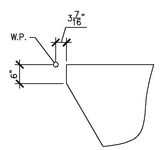

A NB3 ACUTE CORNER BLOCKOUT DETAIL (FOR FLANGE)

1/2" = 1'-0"

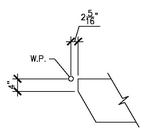

B NB3 ACUTE CORNER BLOCKOUT DETAIL (FOR STEM)

1/2" = 1'-0"

MARK: CR-NB2	QTY.: 1	WT.: 44.27 T	VOL.: 21.86 cy

MATERIAL LIST / NEXT BEAM

ITEM	MARK	DESCRIPTION	QTY.
1	CR-401L	#4 BENT BAR (LEVEL II, DUAL COATED)	124
2	CR-402L	#4 BENT BAR (LEVEL II, DUAL COATED)	96
3	CR-403L	#4 BENT BAR (LEVEL II, DUAL COATED)	16
4	CR-404L	#4 BENT BAR (LEVEL II, DUAL COATED)	81
5	CR-405L	#4 BENT BAR (LEVEL II, DUAL COATED)	16
6	CR-406L	#4 BENT BAR (LEVEL II, DUAL COATED)	8
7	CR-407L	#4 BENT BAR (LEVEL II, DUAL COATED)	4
8	CR-408L	#4 BENT BAR (LEVEL II, DUAL COATED)	4
9	CR-409L	#4 BENT BAR (LEVEL II, DUAL COATED)	4
10	CR-410L	#4 BENT BAR (LEVEL II, DUAL COATED)	12
11	CR-414L	#4 BENT BAR (LEVEL II, DUAL COATED)	4
12	CR-415L	#4 BENT BAR (LEVEL II, DUAL COATED)	8
13	CR-416L	#4 BENT BAR (LEVEL II, DUAL COATED)	2
14	CR-417L	#4 BENT BAR (LEVEL II, DUAL COATED)	6
15	CR-418L	#4 BENT BAR (LEVEL II, DUAL COATED)	6
16	CR-501L	#5 BENT BAR (LEVEL II, DUAL COATED)	2
17	CR-502L	#5 BENT BAR (LEVEL II, DUAL COATED)	2
18	CR-503L	#5 BENT BAR (LEVEL II, DUAL COATED)	2
19	CR-504L	#5 BENT BAR (LEVEL II, DUAL COATED)	2
20	CR-505L	#5 BENT BAR (LEVEL II, DUAL COATED)	2
21	CR-506L	#5 BENT BAR (LEVEL II, DUAL COATED)	2
22	CR-507L	#5 BENT BAR (LEVEL II, DUAL COATED) ⚠1	2
23	CR-510L	#5 BENT BAR (LEVEL II, DUAL COATED)	2
24	CR-511L	#5 BENT BAR (LEVEL II, DUAL COATED)	2
25	CR-512L	#5 BENT BAR (LEVEL II, DUAL COATED)	2
26	CR-513L	#5 BENT BAR (LEVEL II, DUAL COATED)	2
27	CR-514L	#5 BENT BAR (LEVEL II, DUAL COATED)	2
28	CR-515L	#5 BENT BAR (LEVEL II, DUAL COATED)	2
29	CR-516L	#5 BENT BAR (LEVEL II, DUAL COATED)	2
30	CR-517L	#5 BENT BAR (LEVEL II, DUAL COATED)	2
31	CR-518L	#5 BENT BAR (LEVEL II, DUAL COATED)	2
32	CR-519L	#5 BENT BAR (LEVEL II, DUAL COATED)	4
33	CR-520L	#5 BENT BAR (LEVEL II, DUAL COATED)	6
34			
35		#4 x 8'-11" (LEVEL II, DUAL COATED)	18
36		#5 x 7'-8 1/2" (LEVEL II, DUAL COATED)	202
37		#5 x 7'-9" (LEVEL II, DUAL COATED)	8
38		#5 x 7'-10" (LEVEL II, DUAL COATED)	8
39		#5 x 7'-11" (LEVEL II, DUAL COATED)	8
40		#5 x 8'-0" (LEVEL II, DUAL COATED)	4
41		#5 x 8'-1" (LEVEL II, DUAL COATED)	4
42		#5 x 8'-2" (LEVEL II, DUAL COATED)	4
43		#5 x 8'-3" (LEVEL II, DUAL COATED)	4
44		#5 x 8'-4" (LEVEL II, DUAL COATED)	4
45		#5 x 8'-5" (LEVEL II, DUAL COATED)	4
46		#5 x 8'-7" (LEVEL II, DUAL COATED)	4
47		#5 x 8'-8" (LEVEL II, DUAL COATED)	8
48		#5 x 8'-9" (LEVEL II, DUAL COATED)	4
49		#5 x 70'-8" (W/ (1) 2'-6" STAGGERED LAP) (40' + 33'-2") (LVL. II, DUAL COATED)	11
50		#5 x 61'-5" (W/ (1) 2'-6" STAGGERED LAP) (40' + 23'-11") (LVL. II, DUAL COATED)	11
51			
52	MK-CR1	MODIFIED UNIVERSAL 4APR DECK FORM HANGER 45° (GALV.) (20" LG.)	15
53		2"ø I.D. PVC SLEEVE	4
54		SET OF (4) 0.60"ø x 270 KSI STRAND LIFTING LOOPS	4

⚠1 03-13-15 REVISED PER EOR COMMENTS

APPROVED: Approval of drawings and/or procedures indicates concurrence with the information presented and does not relieve the Contractor or Fabricator of compliance with all specifications and code requirements — X

APPROVED AS NOTED

REVISE AND RESUBMIT

NOT REVIEWED

Stantec

Date: 3/27/2015

By: Michael J. Chenette

This review by Stantec Consulting Services Inc. is for the sole purpose of ascertaining conformance with the general design concept. This review shall not mean that Stantec Consulting Services Inc approves the detail design inherent in the shop drawings, responsibility for which shall remain with the Contractor. Submitting same, and such review shall not relieve the Contractor of his responsibility for errors or omissions in the shop drawing or of his responsibility for meeting all requirements of the Contract Documents. The contractor is responsible for dimensions to be confirmed and correlated at the job site, for information that pertains solely to the fabrication processes or to techniques of construction and installation and for coordination of the work of all subtrades.

APPROVAL STAMP:

J.P. CARRARA & SONS INC.
Precast & Prestress Manufacturer
2464 CASE STR., MIDDLEBURY, VERMONT 05753 Phone:(802)388-6361 Fax:(802)388-9010

AUSTIN CONSTRUCTION, INC.
CONTRACTOR
CONCORD, VERMONT

STATE OF VERMONT AGENCY OF TRANSPORTATION
COUNTY OF ORANGE

TOWN OF CORINTH
CHICKEN FARM ROAD T.H.16 CLASS 3 LOCAL ROAD
BRIDGE NO.: 36 PROJECT NO.: BRO 1447 (29)

PRESTRESSED NEXT BEAM DETAILS

DATE: MAR. 13, 2015
SCALE: NOTED
CHKD: RM DFTM: PSS
JOB NO: 23448-014
DWG. NO: NB4

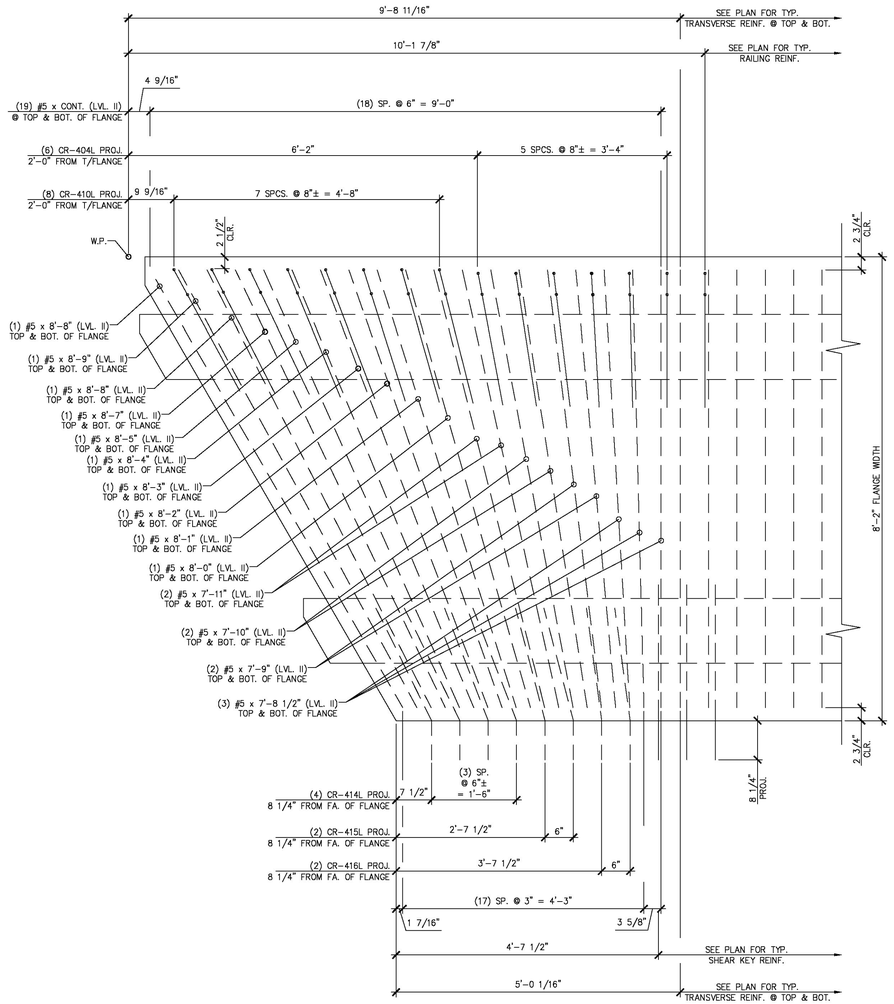

A NB4.1 BEAM END TRANSVERSE REINFORCING

3/4" = 1'-0"

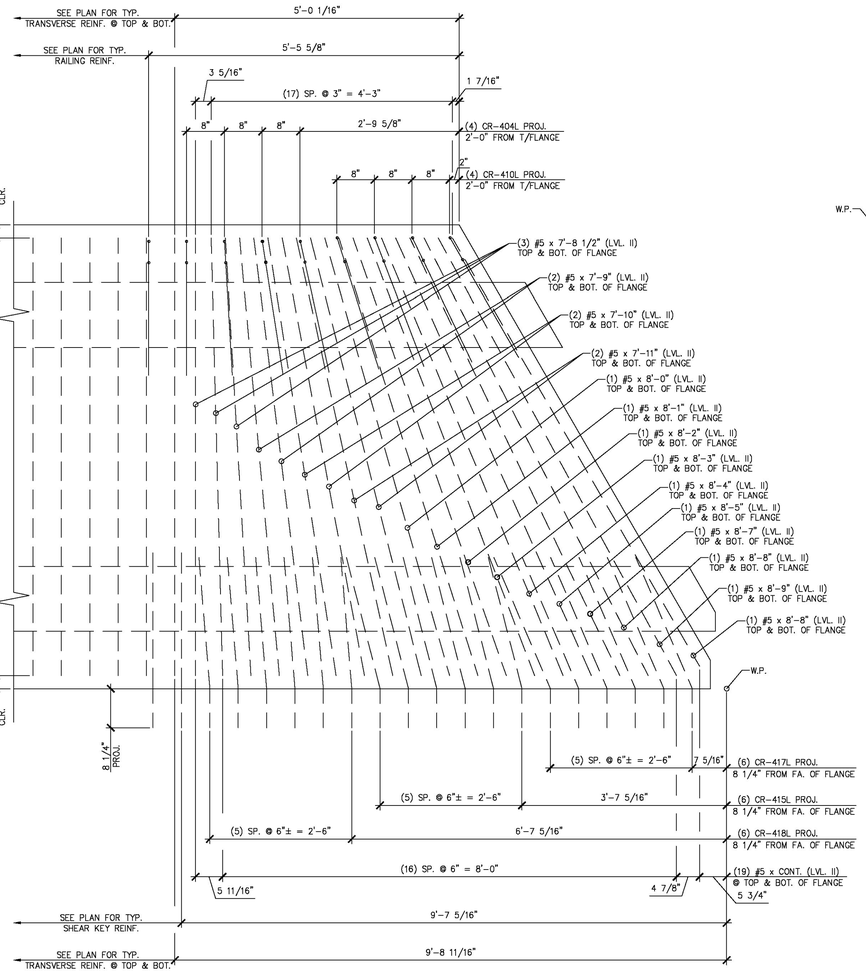

B NB4.1 BEAM END TRANSVERSE REINFORCING

3/4" = 1'-0"

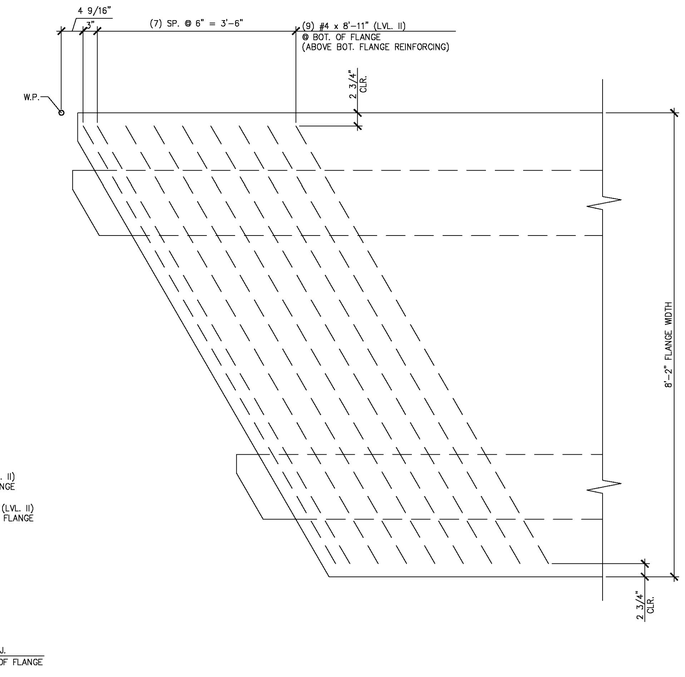

C NB4.1 ADDITIONAL TRANSVERSE REINFORCING AT BOTTOM OF FLANGE

3/4" = 1'-0"

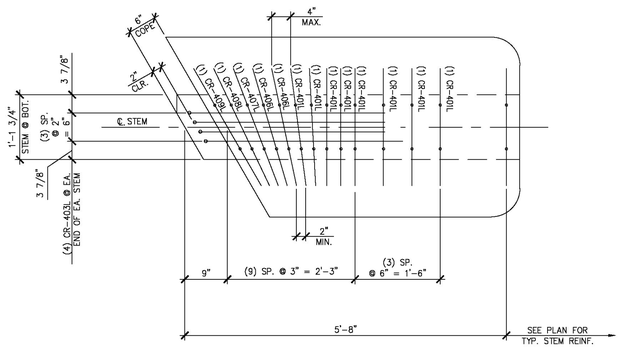

D NB4.1 BEAM END TRANSVERSE REINFORCING

3/4" = 1'-0"

APPROVED: Approval of drawings and/or procedures indicates concurrence with the information presented and does not relieve the Contractor or Fabricator of compliance with all specifications and code requirements	x	Stantec
APPROVED AS NOTED		
REVISE AND RESUBMIT		
NOT REVIEWED		
Date: 3/27/2015		
By: Michael J. Chenette		

This review by Stantec Consulting Services Inc. is for the sole purpose of ascertaining conformance with the general design concept. This review shall not mean that Stantec Consulting Services Inc approves the detail design inherent in the shop drawings, responsibility for which shall remain with the Contractor. Submitting same, and such review shall not relieve the Contractor of his responsibility for errors or omissions in the shop drawing or of his responsibility for meeting all requirements of the Contract Documents. The contractor is responsible for dimensions to be confirmed and correlated at the job site, for information that pertains solely to the fabrication processes or to techniques of construction and installation and for coordination of the work of all subtrades.

APPROVAL STAMP:

J.P. CARRARA & SONS INC.
Precast & Prestress Manufacturer
2464 CASE STR., MIDDLEBURY, VERMONT 05753 Phone:(802)388-6361 Fax:(802)388-9010

AUSTIN CONSTRUCTION, INC.
CONTRACTOR
CONCORD, VERMONT

STATE OF VERMONT AGENCY OF TRANSPORTATION
COUNTY OF ORANGE

TOWN OF CORINTH
CHICKEN FARM ROAD T.H.16 CLASS 3 LOCAL ROAD
BRIDGE NO.: 36 PROJECT NO.: BRO 1447 (29)

PRESTRESSED NEXT BEAM DETAILS

DATE: MAR. 13, 2015
SCALE: NOTED
CHKD: RM DFTM: PSS
JOB NO: 23448-014
DWG. NO: NB4.1

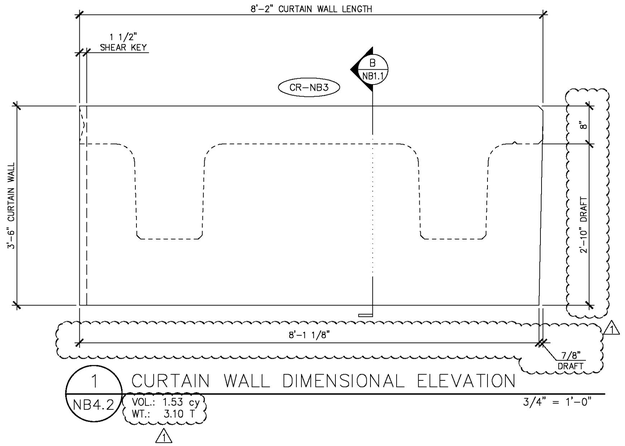

1 NB4.2 CURTAIN WALL DIMENSIONAL ELEVATION

VOL.: 1.53 cy
WT.: 3.10 T

3/4" = 1'-0"

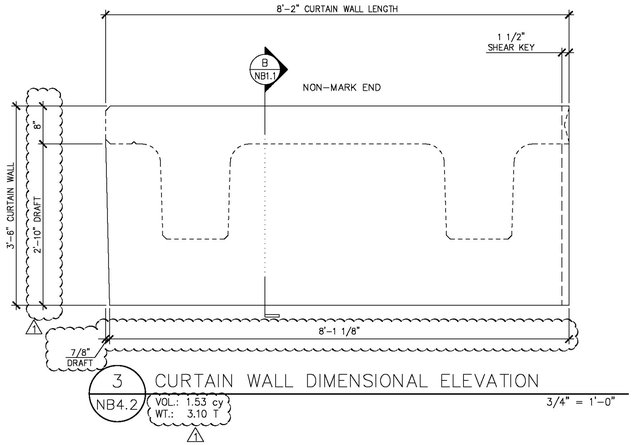

3 NB4.2 CURTAIN WALL DIMENSIONAL ELEVATION

VOL.: 1.53 cy
WT.: 3.10 T

3/4" = 1'-0"

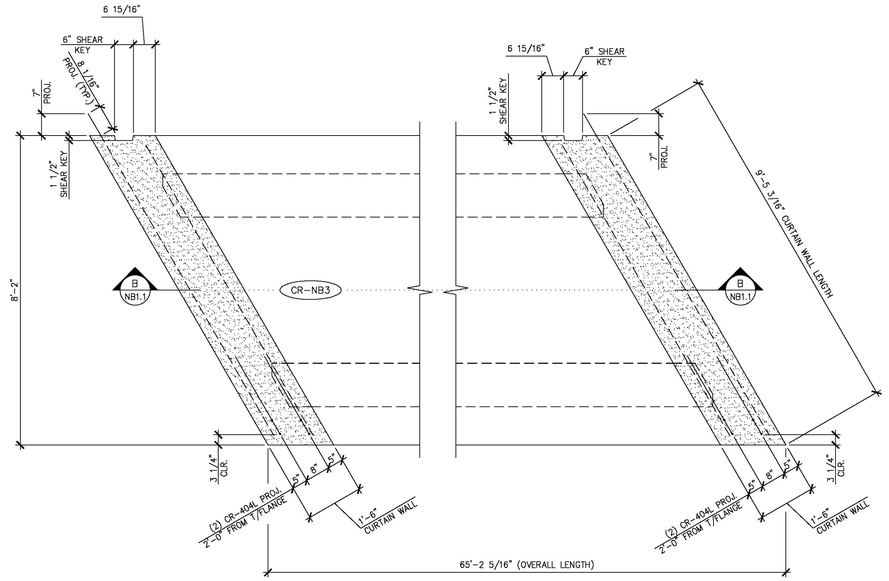

5 NB4.2 CURTAIN WALL DIMENSIONAL PLAN

1/2" = 1'-0"

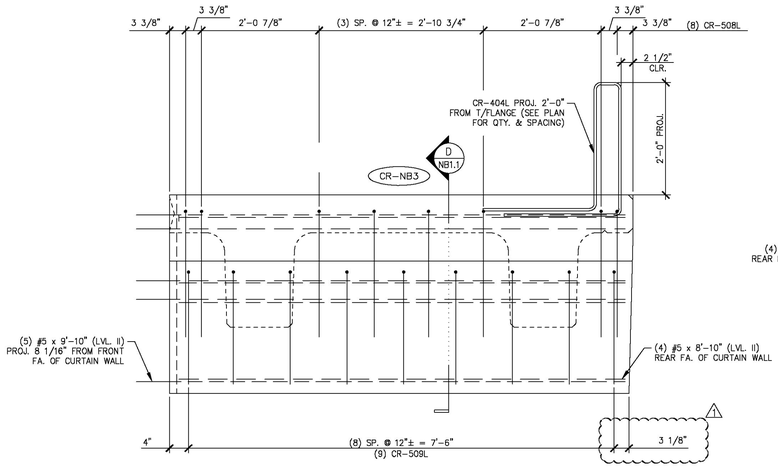

2 NB4.2 CURTAIN WALL REINFORCING ELEVATION

3/4" = 1'-0"

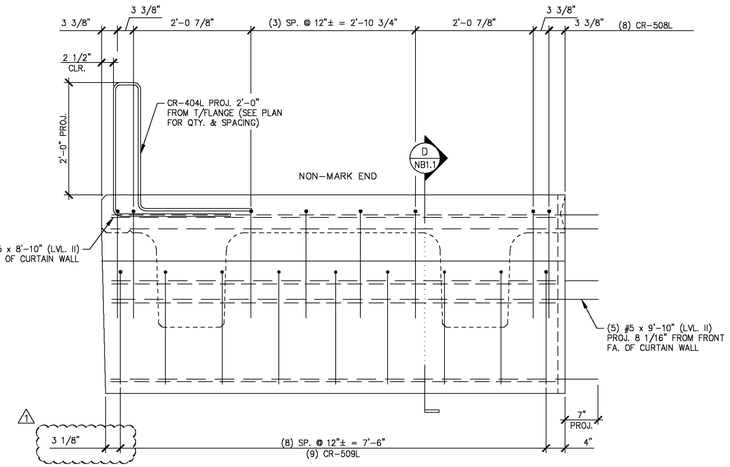

4 NB4.2 CURTAIN WALL REINFORCING ELEVATION

3/4" = 1'-0"

1 44.27 T = NEXT BEAM
3.10 T = CURTAIN WALL (MARK END)
3.10 T = CURTAIN WALL (NON-MARK END)
50.47 T = TOTAL BEAM WT.

MARK: CR-NB3 | QTY.: 1

MATERIAL LIST / CURTAIN WALL

ITEM	MARK	DESCRIPTION	QTY./CURTAIN WALL	
			MARK END	NON-MARK END
1	CR-404L	#4 BENT BAR (LEVEL II, DUAL COATED)	2	2
2	CR-508L	#5 BENT BAR (LEVEL II, DUAL COATED)	8	8
3	CR-509L	#5 BENT BAR (LEVEL II, DUAL COATED)	9	9
4				
5		#5 x 9'-10" (LVL. II, DUAL COATED)	5	5
6		#5 x 8'-10" (LVL. II, DUAL COATED)	4	4
7				
8				
9				
10				

APPROVED: Approval of drawings and/or procedures indicates concurrence with the information presented and does not relieve the Contractor or Fabricator of compliance with all specifications and code requirements	x	Stantec
APPROVED AS NOTED		
REVISE AND RESUBMIT		
NOT REVIEWED		

Date: 3/27/2015

By: Michael J. Chenette

This review by Stantec Consulting Services Inc. is for the sole purpose of ascertaining conformance with the general design concept. This review shall not mean that Stantec Consulting Services Inc approves the detail design inherent in the shop drawings, responsibility for which shall remain with the Contractor. Submitting same, and such review shall not relieve the Contractor of his responsibility for errors or omissions in the shop drawing or of his responsibility for meeting all requirements of the Contract Documents. The contractor is responsible for dimensions to be confirmed and correlated at the job site, for information that pertains solely to the fabrication processes or to techniques of construction and installation and for coordination of the work of all subtrades.

1 03-13-15 REVISED PER EOR COMMENTS

APPROVAL STAMP:

J.P. CARRARA & SONS INC.
Precast & Prestress Manufacturer
2464 CASE STR., MIDDLEBURY, VERMONT 05753 Phone:(802)388-6361 Fax:(802)388-9010

AUSTIN CONSTRUCTION, INC.
CONTRACTOR
CONCORD, VERMONT

STATE OF VERMONT AGENCY OF TRANSPORTATION
COUNTY OF ORANGE

TOWN OF CORINTH
CHICKEN FARM ROAD T.H.16 CLASS 3 LOCAL ROAD
BRIDGE NO.: 36 PROJECT NO.: BRO 1447 (29)

PRECAST CURTAIN WALL DETAILS

DATE: MAR. 13, 2015
SCALE: NOTED
CHKD: RM | DFTM: PSS
JOB NO: 23448-014
DWG. NO: NB4.2

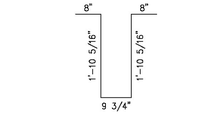

CR-401L
#4 BENT BAR
LEVEL II (DUAL COATED)
USE 2"ø [50 mm] PIN
(372) REQ'D.

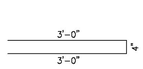

CR-402L
#4 BENT BAR
LEVEL II (DUAL COATED)
USE 2"ø [50 mm] PIN
(386) REQ'D.

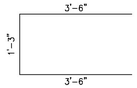

CR-403L
#4 BENT BAR
LEVEL II (DUAL COATED)
USE 2"ø [50 mm] PIN
(48) REQ'D.

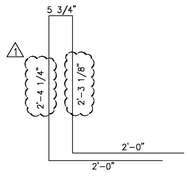

CR-404L
#4 BENT BAR
LEVEL II (DUAL COATED)
USE 2"ø [50 mm] PIN
(170) REQ'D.



CR-405L
#4 BENT BAR
LEVEL II (DUAL COATED)
USE 2"ø [50 mm] PIN
(48) REQ'D.

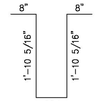

CR-406L
#4 BENT BAR
LEVEL II (DUAL COATED)
USE 2"ø [50 mm] PIN
(24) REQ'D.

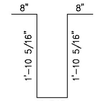

CR-407L
#4 BENT BAR
LEVEL II (DUAL COATED)
USE 2"ø [50 mm] PIN
(12) REQ'D.

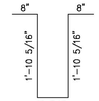

CR-408L
#4 BENT BAR
LEVEL II (DUAL COATED)
USE 2"ø [50 mm] PIN
(12) REQ'D.

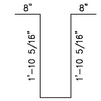

CR-409L
#4 BENT BAR
LEVEL II (DUAL COATED)
USE 2"ø [50 mm] PIN
(12) REQ'D.

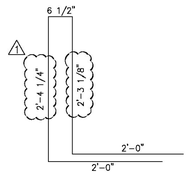

CR-410L
#4 BENT BAR
LEVEL II (DUAL COATED)
USE 2"ø [50 mm] PIN
(24) REQ'D.

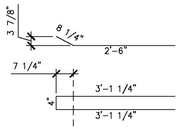

CR-411L
#4 BENT BAR
LEVEL II (DUAL COATED)
USE 2"ø [50 mm] PIN
(12) REQ'D.

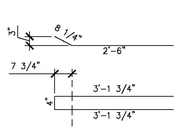

CR-412L
#4 BENT BAR
LEVEL II (DUAL COATED)
USE 2"ø [50 mm] PIN
(12) REQ'D.

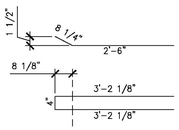

CR-413L
#4 BENT BAR
LEVEL II (DUAL COATED)
USE 2"ø [50 mm] PIN
(10) REQ'D.

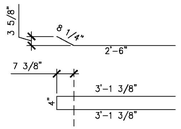

CR-414L
#4 BENT BAR
LEVEL II (DUAL COATED)
USE 2"ø [50 mm] PIN
(16) REQ'D.

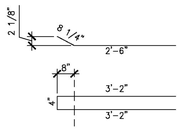

CR-415L
#4 BENT BAR
LEVEL II (DUAL COATED)
USE 2"ø [50 mm] PIN
(20) REQ'D.

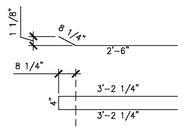

CR-416L
#4 BENT BAR
LEVEL II (DUAL COATED)
USE 2"ø [50 mm] PIN
(10) REQ'D.

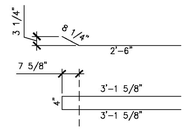

CR-417L
#4 BENT BAR
LEVEL II (DUAL COATED)
USE 2"ø [50 mm] PIN
(12) REQ'D.

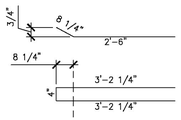

CR-418L
#4 BENT BAR
LEVEL II (DUAL COATED)
USE 2"ø [50 mm] PIN
(12) REQ'D.

NEXT BEAM & CURTAIN WALL MISCELLANEOUS MATERIALS

ITEM	MARK	QTY.	DESCRIPTION	REMARKS
1		54	#4 x 8'-11" (LEVEL II, DUAL COATED)	
2				
3		606	#5 x 7'-8 1/2" (LEVEL II, DUAL COATED)	
4		24	#5 x 7'-9" (LEVEL II, DUAL COATED)	
5		24	#5 x 7'-10" (LEVEL II, DUAL COATED)	
6		24	#5 x 7'-11" (LEVEL II, DUAL COATED)	
7		12	#5 x 8'-0" (LEVEL II, DUAL COATED)	
8		12	#5 x 8'-1" (LEVEL II, DUAL COATED)	
9		12	#5 x 8'-2" (LEVEL II, DUAL COATED)	
10		12	#5 x 8'-3" (LEVEL II, DUAL COATED)	
11		12	#5 x 8'-4" (LEVEL II, DUAL COATED)	
12		12	#5 x 8'-5" (LEVEL II, DUAL COATED)	
13		12	#5 x 8'-7" (LEVEL II, DUAL COATED)	
14		24	#5 x 8'-8" (LEVEL II, DUAL COATED)	
15		12	#5 x 8'-9" (LEVEL II, DUAL COATED)	
16		26	#5 x 8'-10" (LEVEL II, DUAL COATED)	
17		20	#5 x 9'-10" (LEVEL II, DUAL COATED)	
18		8	#5 x 10'-9" (LEVEL II, DUAL COATED)	
19		33	#5 x 70'-8" (W/ (1) 2'-6" STAGGERED LAP) (40' + 33'-2") (LVL. II, DUAL COATED)	
20		33	#5 x 61'-5" (W/ (1) 2'-6" STAGGERED LAP) (40' + 23'-11") (LVL. II, DUAL COATED)	
21		8	#4 x 61'-6" (W/ (1) 2'-6" STAGGERED LAP) (LVL. II, DUAL COATED)	TO BE SHIPPED LOOSE AT THE JOBSITE
22				
23				
24				
25				
26				
27				
28				
29				
30				
31				
32				
33	MK-CR1	30	MODIFIED UNIVERSAL 4APR DECK FORM HANGER 45° (GALV.) (20" LG.)	
34		12	SET OF (4) 0.60"ø x 270 KSI STRAND LIFTING LOOPS	
35		12	2"ø I.D. PVC SLEEVE	
36				
37				
38				

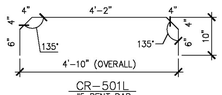

CR-501L
#5 BENT BAR
LEVEL II (DUAL COATED)
USE 2 3/4"ø [70 mm] PIN
(6) REQ'D.

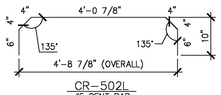

CR-502L
#5 BENT BAR
LEVEL II (DUAL COATED)
USE 2 3/4"ø [70 mm] PIN
(6) REQ'D.

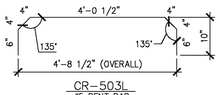

CR-503L
#5 BENT BAR
LEVEL II (DUAL COATED)
USE 2 3/4"ø [70 mm] PIN
(6) REQ'D.

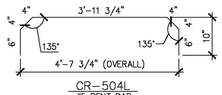

CR-504L
#5 BENT BAR
LEVEL II (DUAL COATED)
USE 2 3/4"ø [70 mm] PIN
(6) REQ'D.

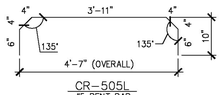

CR-505L
#5 BENT BAR
LEVEL II (DUAL COATED)
USE 2 3/4"ø [70 mm] PIN
(6) REQ'D.

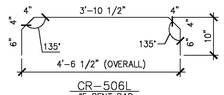

CR-506L
#5 BENT BAR
LEVEL II (DUAL COATED)
USE 2 3/4"ø [70 mm] PIN
(6) REQ'D.

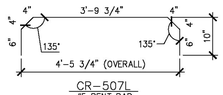

CR-507L
#5 BENT BAR
LEVEL II (DUAL COATED)
USE 2 3/4"ø [70 mm] PIN
(6) REQ'D.

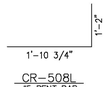

CR-508L
#5 BENT BAR
LEVEL II (DUAL COATED)
USE 2 3/4"ø [70 mm] PIN
(52) REQ'D.

(4) TO BE SHIPPED LOOSE AT THE JOB SITE

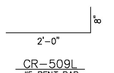

CR-509L
#5 BENT BAR
LEVEL II (DUAL COATED)
USE 2 3/4"ø [70 mm] PIN
(58) REQ'D.

(4) TO BE SHIPPED LOOSE AT THE JOB SITE

CR-510L
#5 BENT BAR
LEVEL II (DUAL COATED)
USE 2 3/4"ø [70 mm] PIN
(6) REQ'D.

CR-511L
#5 BENT BAR
LEVEL II (DUAL COATED)
USE 2 3/4"ø [70 mm] PIN
(6) REQ'D.

CR-512L
#5 BENT BAR
LEVEL II (DUAL COATED)
USE 2 3/4"ø [70 mm] PIN
(6) REQ'D.

CR-513L
#5 BENT BAR
LEVEL II (DUAL COATED)
USE 2 3/4"ø [70 mm] PIN
(6) REQ'D.

CR-514L
#5 BENT BAR
LEVEL II (DUAL COATED)
USE 2 3/4"ø [70 mm] PIN
(6) REQ'D.

CR-515L
#5 BENT BAR
LEVEL II (DUAL COATED)
USE 2 3/4"ø [70 mm] PIN
(6) REQ'D.

CR-516L
#5 BENT BAR
LEVEL II (DUAL COATED)
USE 2 3/4"ø [70 mm] PIN
(6) REQ'D.

CR-517L
#5 BENT BAR
LEVEL II (DUAL COATED)
USE 2 3/4"ø [70 mm] PIN
(6) REQ'D.

CR-518L
#5 BENT BAR
LEVEL II (DUAL COATED)
USE 2 3/4"ø [70 mm] PIN
(6) REQ'D.

CR-519L
#5 BENT BAR
LEVEL II (DUAL COATED)
USE 2 3/4"ø [70 mm] PIN
(12) REQ'D.

CR-520L
#5 BENT BAR
LEVEL II (DUAL COATED)
USE 2 3/4"ø [70 mm] PIN
(18) REQ'D.

PRESTRESSED NEXT BEAMS

APPROVED: Approval of drawings and/or procedures indicates concurrence with the information presented and does not relieve the Contractor or Fabricator of compliance with all specifications and code requirements	x	Stantec
APPROVED AS NOTED		
REVISE AND RESUBMIT		
NOT REVIEWED		

Date: 3/27/2015

By: Michael J. Chenette

This review by Stantec Consulting Services Inc. is for the sole purpose of ascertaining conformance with the general design concept. This review shall not mean that Stantec Consulting Services Inc approves the detail design inherent in the shop drawings, responsibility for which shall remain with the Contractor. Submitting same, and such review shall not relieve the Contractor of his responsibility for errors or omissions in the shop drawing or of his responsibility for meeting all requirements of the Contract Documents. The contractor is responsible for dimensions to be confirmed and correlated at the job site, for information that pertains solely to the fabrication processes or to techniques of construction and installation and for coordination of the work of all subtrades.

1 03-13-15 REVISED PER EOR COMMENTS

APPROVAL STAMP:

J.P. CARRARA & SONS INC.
Precast & Prestress Manufacturer
2464 CASE STR., MIDDLEBURY, VERMONT 05753 Phone:(802)388-6361 Fax:(802)388-9010

AUSTIN CONSTRUCTION, INC.
CONTRACTOR
CONCORD, VERMONT

STATE OF VERMONT AGENCY OF TRANSPORTATION
COUNTY OF ORANGE

TOWN OF CORINTH
CHICKEN FARM ROAD T.H.16 CLASS 3 LOCAL ROAD
BRIDGE NO.: 36 PROJECT NO.: BRO 1447 (29)

MATERIALS LIST

DATE: MAR. 13, 2015
SCALE: NOTED
CHKD: RM DFTM: PSS
JOB NO: 23448-014
DWG. NO: M1

34' PAY LIMIT

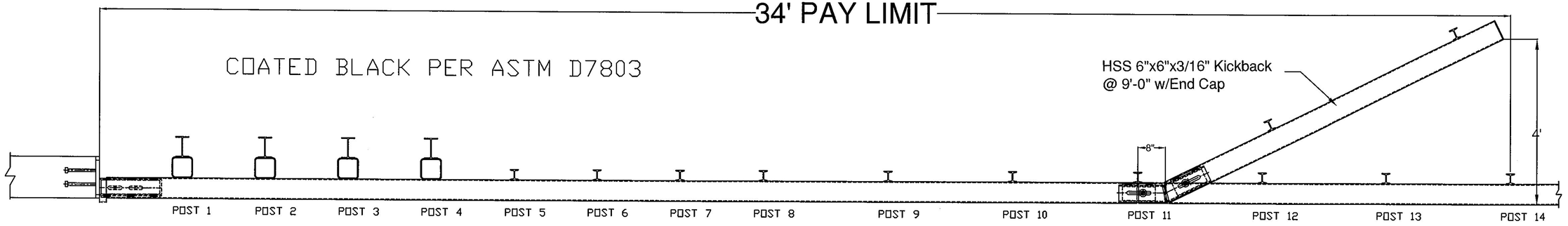

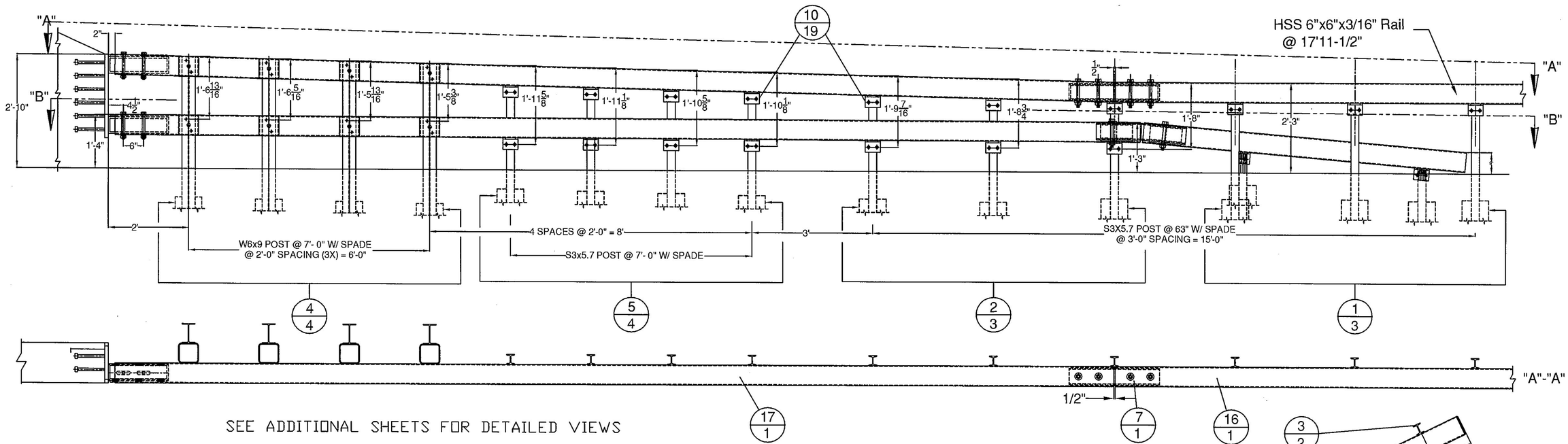

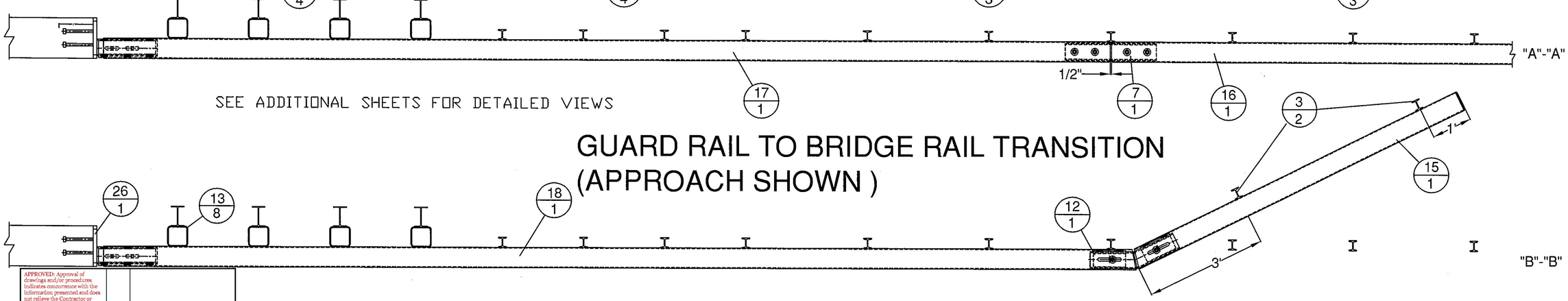

SEE ADDITIONAL SHEETS FOR DETAILED VIEWS

GUARD RAIL TO BRIDGE RAIL TRANSITION (APPROACH SHOWN)

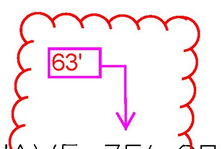

WW 3 & 4 - STRAIGHT
WW 1 - ITEMS 16, 17, & 18 TO HAVE 75' CONVEX RADIUS
WW 2 - ITEMS 17, & 18 TO HAVE 20' CONVEX RADIUS

APPROVED: Approval of drawings and/or procedures indicates concurrence with the information presented and does not relieve the Contractor or Fabricator of compliance with all specifications and code requirements		Stantec
APPROVED AS NOTED	X	
REVISE AND RESUBMIT		
NOT REVIEWED		
Date: 3/10/2015		
By: Michael J. Chenette		
This review by Stantec Consulting Services Inc. is for the sole purpose of ascertaining conformance with the general design concept. This review shall not mean that Stantec Consulting Services Inc approves the detail design inherent in the shop drawings, responsibility for which shall remain with the Contractor. Submitting same, and such review shall not relieve the Contractor of his responsibility for errors or omissions in the shop drawing or of his responsibility for meeting all requirements of the Contract Documents. The contractor is responsible for dimensions to be confirmed and correlated at the job site, for information that pertains solely to the fabrication processes or to techniques of construction and installation and for coordination of the work of all subtrades.		

ITEM #: 900.620

STRUCTURAL STEEL TO COMPLY W/ ASTM A6

TOLERANCE UNLESS OTHERWISE NOTED:
FRACTIONS = ± 1/16"
ANGLES = ± 1/2°
DIAMETERS = ± 1/32"

SHEET 1 OF 5

Galvanized 2-Rail Box Beam Guardrail Approach Section

EM14-202, CHICKEN FARM ROAD (T.H.16) CLASS 3 LOCAL ROAD, BRIDGE NO : 36
PROJECT: 618 CORINTH BRO 1447(29), TOWN OF CORINTH, ORANGE COUNTY, VT

R E V	NO.	DATE	DESCRIPTION	BY
	1	3/5/15	REVISED PER 3/4/15 MARK-UP	E.P.

R E V	NO.	DATE	DESCRIPTION	BY

ELDERLEE, INC.
OAKS CORNERS, NEW YORK 14518
E-Mail: dlong@elderlee.com / epeek@elderlee.com
Tel: 315-789-6620 Fax: 315-789-6615

CERTIFIED FABRICATOR

DRAWN	E.P.	12/15/14
CHECKED	D.L.	12/16/14
APPROVED	M.V.	.
SCALE	SCHEMATIC	
DRAWING NO.	FR L - CORINTH-T	

PLAN VIEW



(ITEM # 1)

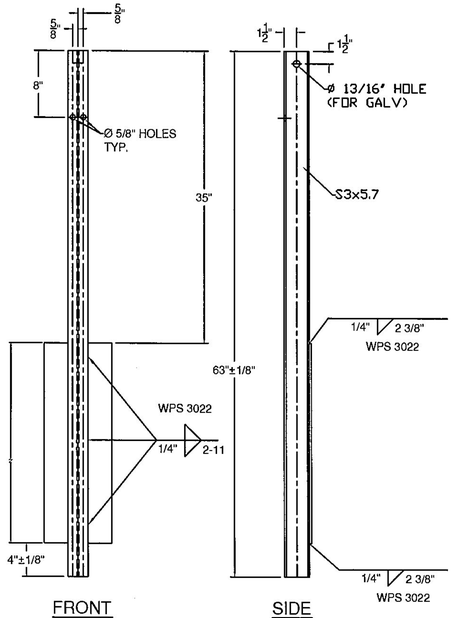

FRONT SIDE

PLAN VIEW

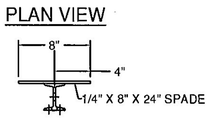

(ITEM # 3)

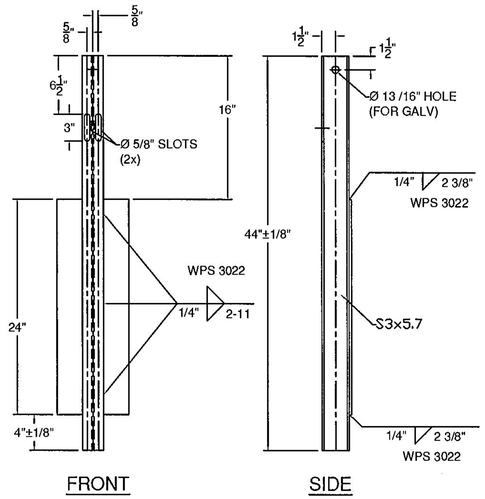

FRONT SIDE

PLAN VIEW

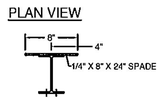

(ITEM # 4)

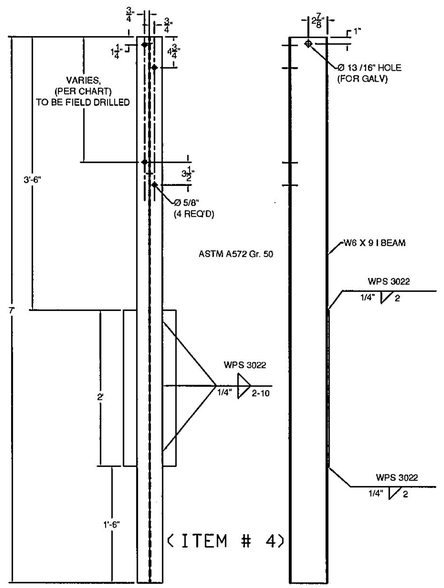

FRONT SIDE

HOLE POSITION CHART	
POST	LENGTH
1	1'-6 13/16"
2	1'-6 5/16"
3	1'-5 13/16"
4	1'-5 3/8"

PLAN VIEW

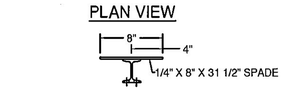

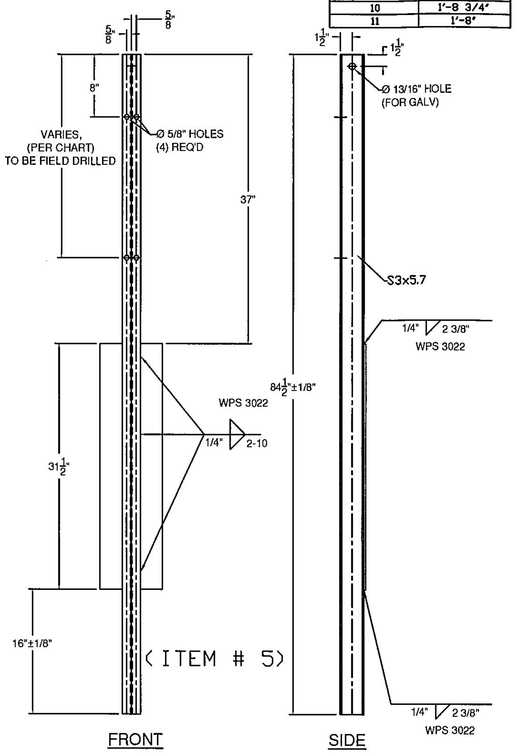

(ITEM # 5)

FRONT SIDE

HOLE POSITION CHART	
POST	LENGTH
5	1'-11 5/8"
6	1'-11 1/8"
7	1'-10 5/8"
8	1'-10 1/8"
9	1'-9 7/16"
10	1'-8 3/4"
11	1'-8"

PLAN VIEW

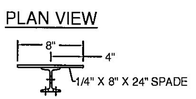

(ITEM # 2)

HOLE POSITION CHART	
POST	LENGTH
9	1'-9 7/16"
10	1'-8 3/4"
11	1'-8"

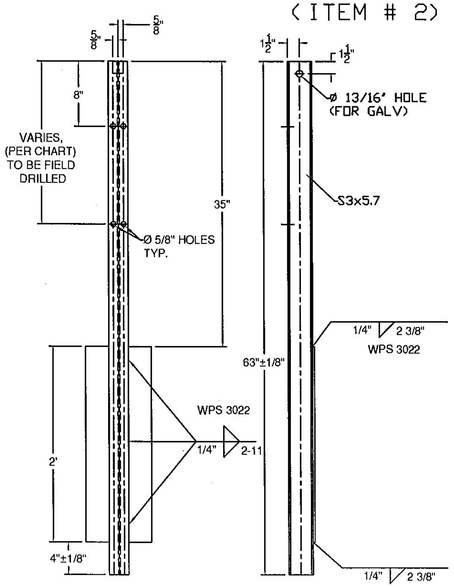

FRONT SIDE

GENERAL NOTES:

1) ALL RAILING IS TO BE FABRICATED AND ERECTED ACCORDING TO SECTION 525 OF THE STANDARD SPECIFICATIONS.
2) BOLTS SHALL BE TORQUED SNUG TIGHT (APPROXIMATELY 100 FT-LB).
3) PROTRUSIONS CAUSED BY WELDING OR GALVANIZING ARE NOT PERMITTED ON THE ADJOINING SURFACES OF THE BOX BEAM RAILS, SPLICE TUBES AND FILL PLATES.
4) BOX BEAM TUBE AND STEEL POST MATERIALS, DIMENSION SIZES AND NOTES SHALL BE THE SAME AS THOSE OF THE BRIDGE RAIL, UNLESS OTHERWISE NOTED.
5) ANY BENDING OF RAIL SHALL BE DONE AT THE FABRICATION PLANT. RADII GREATER THAN 16' TO BE CURVED ON A TUBE BENDING MACHINE, RADII LESS THAN 16' TO BE "PIE CUT" AND WELDED. CURVED RAILING WILL HAVE AN 18" LENGTH ON EACH END STRAIGHT TO ACCOMADATE SPLICES.
6) ALL STEEL COMPONENTS SHALL BE COATED BLACK IN ACCORDANCE WITH ASTM D7803 FOLLOWING GALVANIZING.

BILL OF MATERIALS, EACH CORNER

ITEM #	QTY.	COMPONENT #	DESCRIPTION	MATERIAL (ASTM)
1	3	0013.57021	3' I-POST, PUNCH 8' W/SPD @ 63' LG	ASTM A572 Gr. 50
2	3	0013.57025	3' I-POST W/SPD @ 63', PUNCH 8', & 20' & HOLES @ VARIOUS	ASTM A572 Gr. 50
3	2	0013.57060	3' I-END POST W/SPD @ 3'-8' LG	ASTM A572 Gr. 50
4	4	-	W6X9 POST @ 7' W/SPD & 5/8" HOLES @ VARIOUS	ASTM A572 Gr. 50
5	4	-	3' I-POST, PUNCH 8' & VARIOUS', W/8X32" SPADE @ 7'	ASTM A572 Gr. 50
7	1	0033.00640	HSS 5X5 TUBE SPLICE @ 27" LG W/ 1/4' SHIMS	A500 Gr. B / A572 Gr 50
10	19	0054.00050	REG BB SHELF ANGLES @ 4-1/2'	ASTM A36
12	1	-	HSS 5X5 DBL BEND TUBE SPL @ 27' LG	A500 Gr. B / A572 Gr 50
13	8		6X6' TRANS. TUBE B/O @ 6' LG	A500 Gr. B
15	1	0054.09000	6X6' BB @ 9'-0" KICKBACK, W/ CAP	A500 Gr. B / A36
*16	1	0054.18000	6X6' BB @ 17'-11 1/2', DRILL 3' CC	A500 Gr. B
*17	1	-	6X6' BB TOP TRANS @ 24'-9 3/4' LG W/EXP END	A500 Gr. B
*18	1	-	6X6' BB BTM TRANS @ 25'-5 1/2' LG W/EXP END	A500 Gr. B
19	18	0080.03355	3/8' X 7 1/2' BOLT, NUT, & 2 FW	A307, A563, F436
20	19	0080.04100	1/2' x 1-1/2' BOLT, NUT, & FW	A307, A563, F436
21	16	0080.04120	1/2' x 1-1/2' BOLT, NUT, 2 FW & LW	A307, A563, F436
23	10	0080.06340	3/4' X 7-1/2' BOLT, NUT, 2 FW	A325, A563, F436
24	8	0080.06370	3/4' X 8' CARR BOLT, NUT, FW & LW	A307, A563, F436

* WW1 - ITEMS 16, 17, & 18 - FACE OF RAIL TO HAVE 'TBD' CONVEX RADIUS
* WW2 - ITEMS 16, 17, & 18 - FACE OF RAIL TO HAVE 'TBD' CONVEX RADIUS

APPROVED: Approval of drawings and/or procedures indicates concurrence with the information presented and does not relieve the Contractor or Fabricator of compliance with all specifications and code requirements

APPROVED AS NOTED X

REVISE AND RESUBMIT

NOT REVIEWED

Date: 3/10/2015

By: Michael J. Chenette

This review by Stantec Consulting Services Inc. is for the sole purpose of ascertaining conformance with the general design concept. This review shall not mean that Stantec Consulting Services Inc approves the detail design inherent in the shop drawings, responsibility for which shall remain with the Contractor. Submitting same, and such review shall not relieve the Contractor of his responsibility for errors or omissions in the shop drawing or of his responsibility for meeting all requirements of the Contract Documents. The contractor is responsible for dimensions to be confirmed and correlated at the job site, for information that pertains solely to the fabrication processes or to techniques of construction and installation and for coordination of the work of all subtrades.

Stantec

HARDWARE NOTES

ITEM #	FUNCTION
19	BOLT RAIL TO SHELF ANGLE (ITEM #10)
20	BOLT SHELF ANGLE (ITEM # 10) TO POST
21	BOLT BLOCK-OUTS (ITEM # 13) TO HEAVY POST (ITEM # 4)
23	SPLICE TUBING (ITEM #'S 7 & 12), & (4) PER PARAPET WALL CONNECTION
24	BOLT RAIL (ITEMS #'S 17, & 18 TO BLOCK-OUTS (ITEM # 13)

ITEM #: 900.620

SHEET 2 OF 5

STRUCTURAL STEEL TO COMPLY W/ ASTM A6

TOLERANCE UNLESS OTHERWISE NOTED:
FRACTIONS = ± 1/16"
ANGLES = ± 1/2°
DIAMETERS = ± 1/32"

Galvanized 2-Rail Box Beam Guardrail Approach Section

EM14-202, CHICKEN FARM ROAD (T.H.16) CLASS 3 LOCAL ROAD, BRIDGE NO : 36
PROJECT: 618 CORINTH BRO 1447(29), TOWN OF CORINTH, ORANGE COUNTY, VT

R	NO.	DATE	DESCRIPTION	BY	R	NO.	DATE	DESCRIPTION	BY
E					E				
V					V				

ELDERLEE, INC.
OAKS CORNERS, NEW YORK 14518
E-Mail: dlong@elderlee.com / epeek@elderlee.com
Tel: 315-789-6620 Fax: 315-789-6615

AISC CERTIFIED FABRICATOR

DRAWN	E.P.	12/15/14
CHECKED	D.L.	12/16/14
APPROVED	M.V.	
SCALE	SCHEMATIC	
DRAWING NO.	FR I. - CORINTH-T	

BACK VIEW

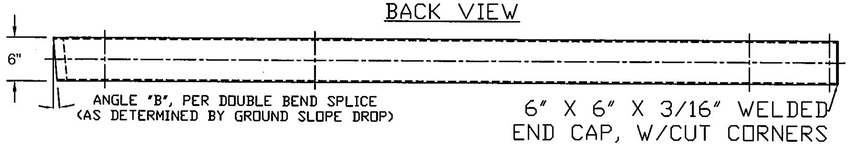

TOP VIEW

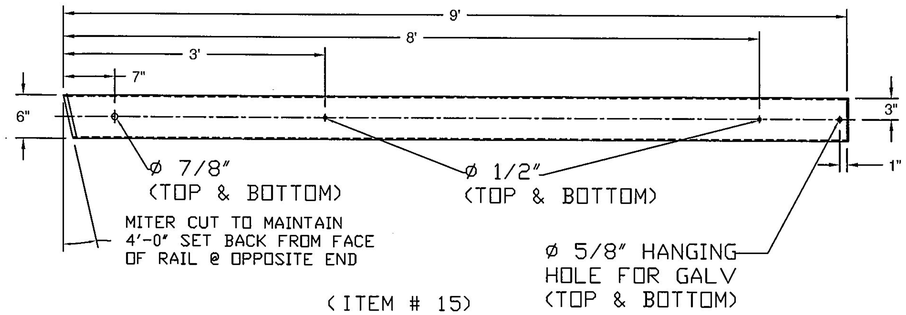

(ITEM # 15)

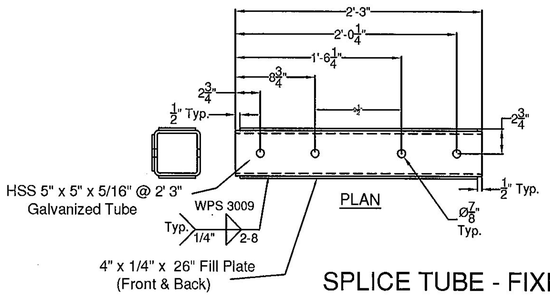

SPLICE TUBE - FIXED

(ITEM # 7)

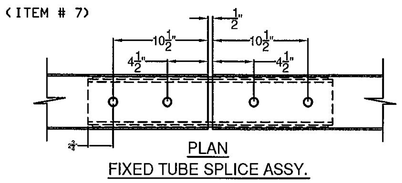

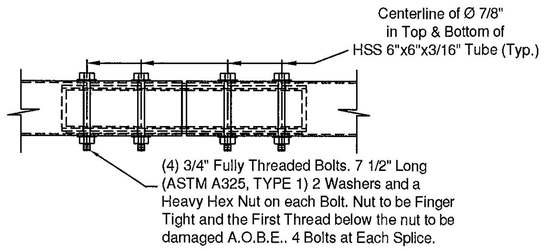

APPROVED: Approval of drawings and/or procedures indicates concurrence with the information presented and does not relieve the Contractor or Fabricator of compliance with all specifications and code requirements		Stantec
APPROVED AS NOTED	X	
REVISE AND RESUBMIT		
NOT REVIEWED		
Date: 3/10/2015		
By: Michael J. Chenette		

This review by Stantec Consulting Services Inc. is for the sole purpose of ascertaining conformance with the general design concept. This review shall not mean that Stantec Consulting Services Inc approves the detail design inherent in the shop drawings, responsibility for which shall remain with the Contractor. Submitting same, and such review shall not relieve the Contractor of his responsibility for errors or omissions in the shop drawing or of his responsibility for meeting all requirements of the Contract Documents. The contractor is responsible for dimensions to be confirmed and correlated at the job site, for information that pertains solely to the fabrication processes or to techniques of construction and installation and for coordination of the work of all subtrades.

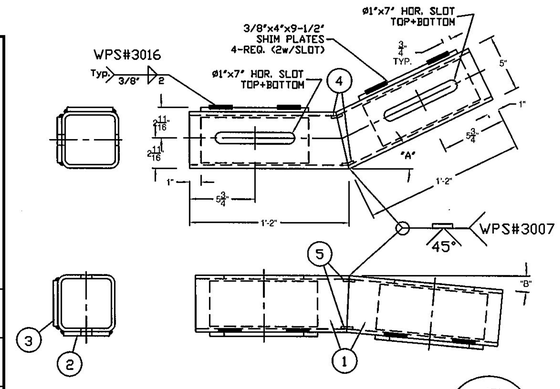

DOUBLE BEND TUBE SPLICE		
ITEM#	QTY.	DESCRIPTION
1	1	8" X 8" X 5/16" TUBE @ 26 3/4°
2	2	3/8" X 4" X 9 1/8" W/ SLOTS-ASTM A36/A709 G-36XCVN
3	2	3/8" X 4" X 9 1/8" W/O SLOTS-ASTM A36/A709 G-36XCVN
4	2	3/16" X 1" X 3 5/8" BACKER PLATE, FORMED
5	2	3/16" X 1" X 4" BACKER PLATE

"A" - SEE PLAN FOR TURN BACK DISTANCE, SET ANGLE ACCORDINGLY.(WW1-42°, WW2-28°, WW3-25°, WW4-25°)
"B" - TURN DOWN ANGLE SET BY THE 9" MEASURMENT AT THE END OF THE BOX BEAM.

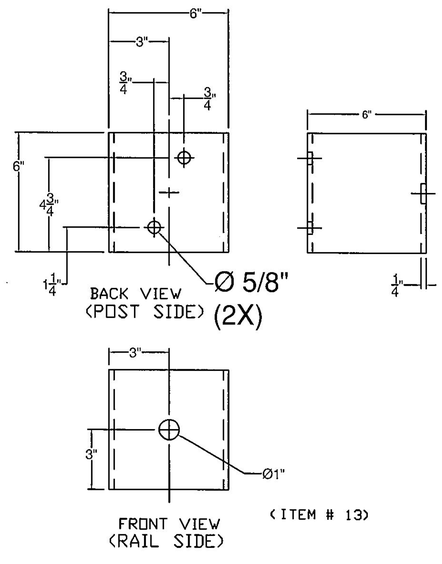

(ITEM # 13)

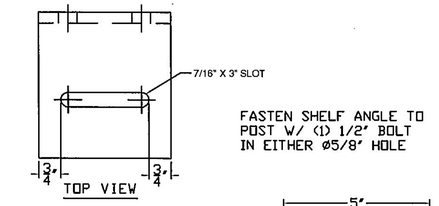

(ITEM # 10)

ITEM #: 900.620

STRUCTURAL STEEL TO COMPLY W/ ASTM A6

TOLERANCE UNLESS OTHERWISE NOTED:
FRACTIONS = ± 1/16"
ANGLES = ± 1/2°
DIAMETERS = ± 1/32"

SHEET 3 OF 5

Galvanized 2-Rail Box Beam Guardrail Approach Section

EM14-202, CHICKEN FARM ROAD (T.H.16) CLASS 3 LOCAL ROAD, BRIDGE NO : 36
PROJECT: 618 CORINTH BRO 1447(29), TOWN OF CORINTH, ORANGE COUNTY, VT

R E V	NO.	DATE	DESCRIPTION	BY

R E V	NO.	DATE	DESCRIPTION	BY

ELDERLEE, INC.
OAKS CORNERS, NEW YORK 14518
E-Mail: dlong@elderlee.com / epeek@elderlee.com
Tel: 315-789-6670 Fax: 315-789-6615

CERTIFIED FABRICATOR

DRAWN	E.P.	12/15/14
CHECKED	D.L.	12/16/14
APPROVED	M.V.	.
SCALE	SCHEMATIC	
DRAWING NO.	FR L - CORINTH-T	

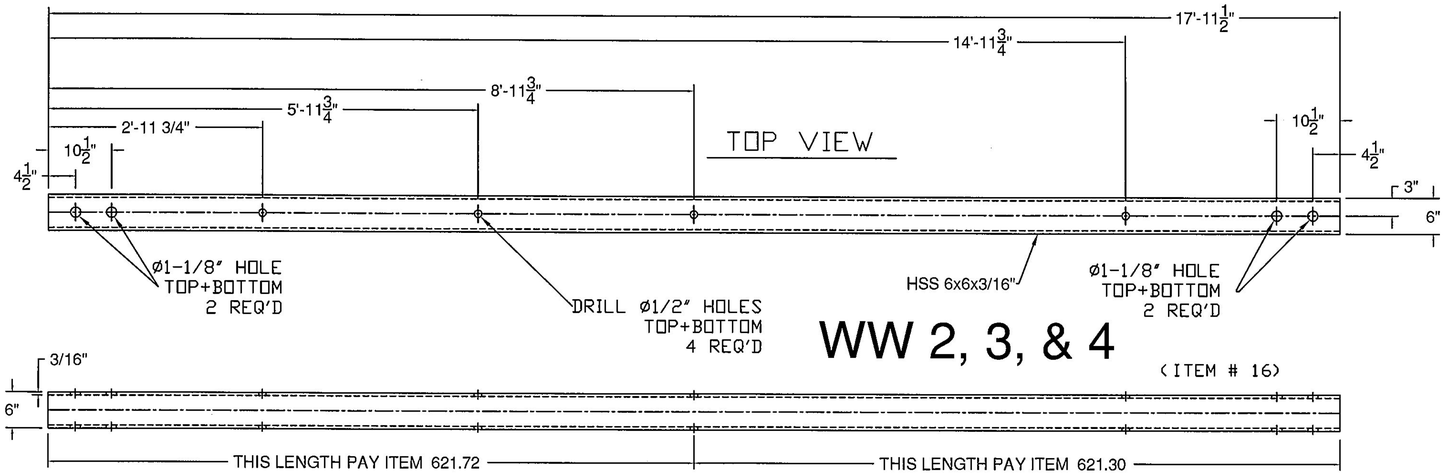

WW 2, 3, & 4

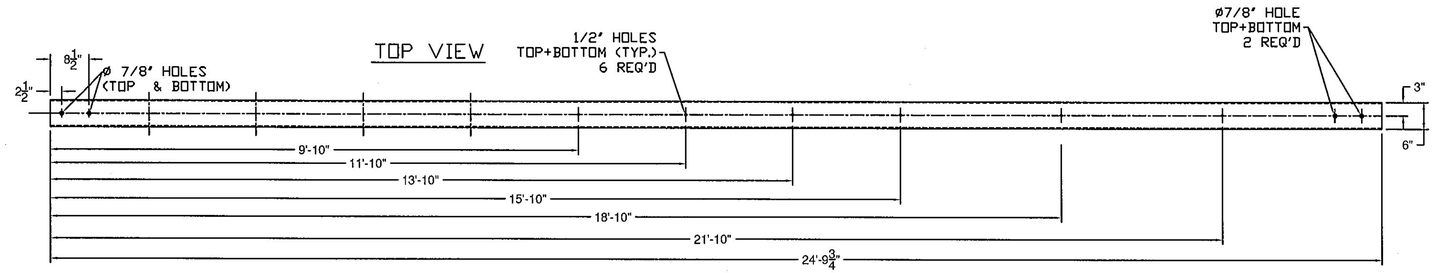

WW 3, & 4

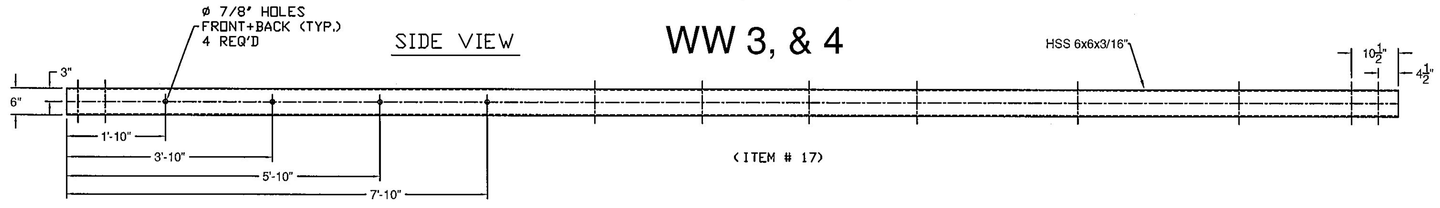

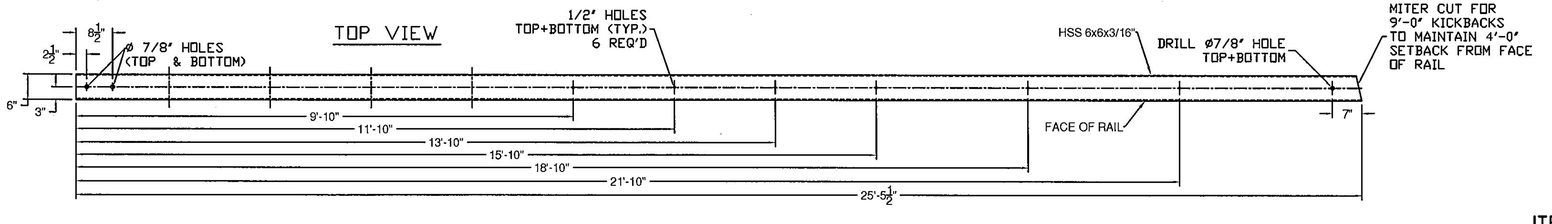

WW 3, & 4

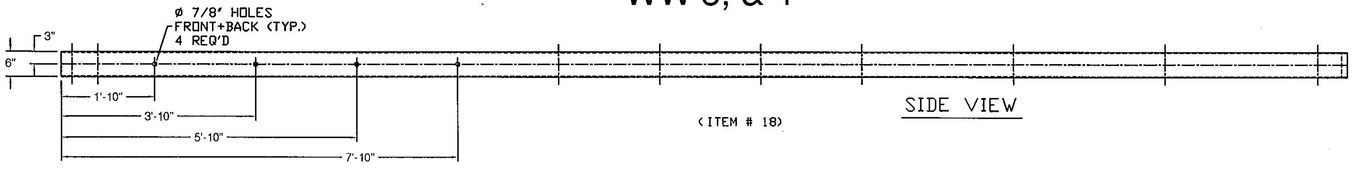

APPROVED: Approval of drawings and/or procedures indicates concurrence with the information presented and does not relieve the Contractor or Fabricator of compliance with all specifications and code requirements		Stantec
APPROVED AS NOTED	X	
REVISE AND RESUBMIT		
NOT REVIEWED		
Date: 3/10/2015		
By: Michael J. Chenette		

This review by Stantec Consulting Services Inc. is for the sole purpose of ascertaining conformance with the general design concept. This review shall not mean that Stantec Consulting Services Inc approves the detail design inherent in the shop drawings, responsibility for which shall remain with the Contractor. Submitting same, and such review shall not relieve the Contractor of his responsibility for errors or omissions in the shop drawing or of his responsibility for meeting all requirements of the Contract Documents. The contractor is responsible for dimensions to be confirmed and correlated at the job site, for information that pertains solely to the fabrication processes or to techniques of construction and installation and for coordination of the work of all subtrades.

ITEM #: 900.620

SHEET 4 OF 5

STRUCTURAL STEEL TO COMPLY W/ ASTM A6

TOLERANCE UNLESS OTHERWISE NOTED:
FRACTIONS = ± 1/16"
ANGLES = ± 1/2°
DIAMETERS = ± 1/32"

Galvanized 2-Rail Box Beam Guardrail Approach Section

EM14-202, CHICKEN FARM ROAD (T.H.16) CLASS 3 LOCAL ROAD, BRIDGE NO : 36
PROJECT: 618 CORINTH BRO 1447(29), TOWN OF CORINTH, ORANGE COUNTY, VT

R	NO.	DATE	DESCRIPTION	BY
E	1	3/5/15	REVISED PER 3/4/15 MARK-UP	E.P.
V				

R	NO.	DATE	DESCRIPTION	BY
E				
V				

ELDERLEE, INC.
OAKS CORNERS, NEW YORK 14518
E-Mail: dlong@elderlee.com / epeek@elderlee.com
Tel: 315-789-6620 Fax: 315-789-6615

CERTIFIED STEEL FABRICATOR

DRAWN	E.P.	12/15/14
CHECKED	D.L.	12/16/14
APPROVED	M.V.	
SCALE	SCHEMATIC	
DRAWING NO.	FR L - CORINTH-T	

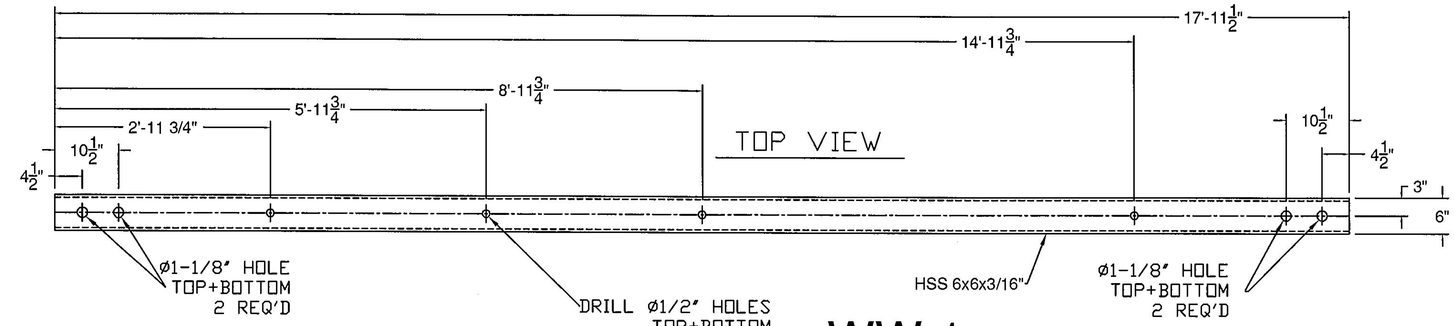

WW 1

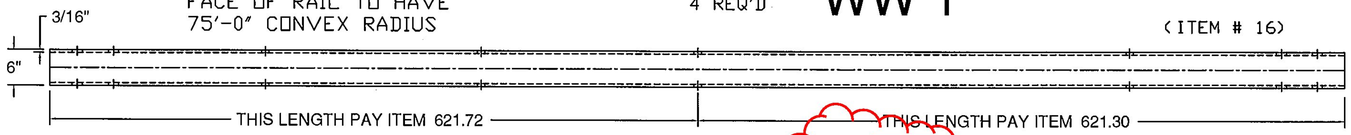

63'

WW 1 - FACE OF RAIL TO HAVE 75'-0" CONVEX RADIUS.

WW 2 - FACE OF RAIL TO HAVE 20'-0" CONVEX RADIUS.

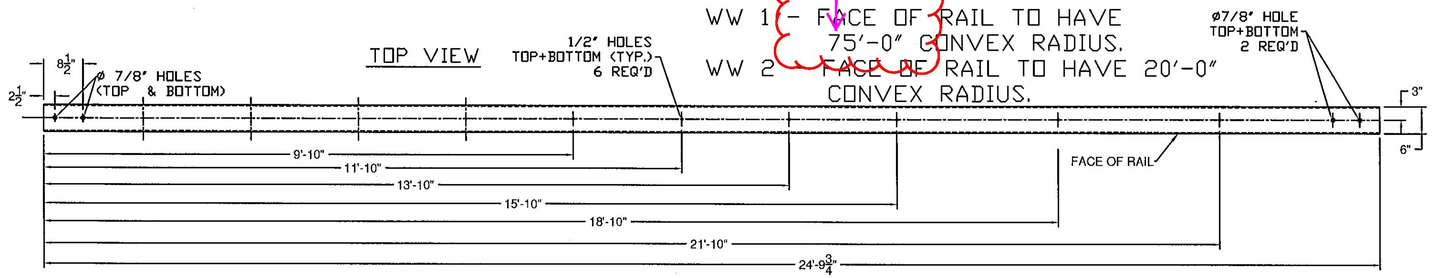

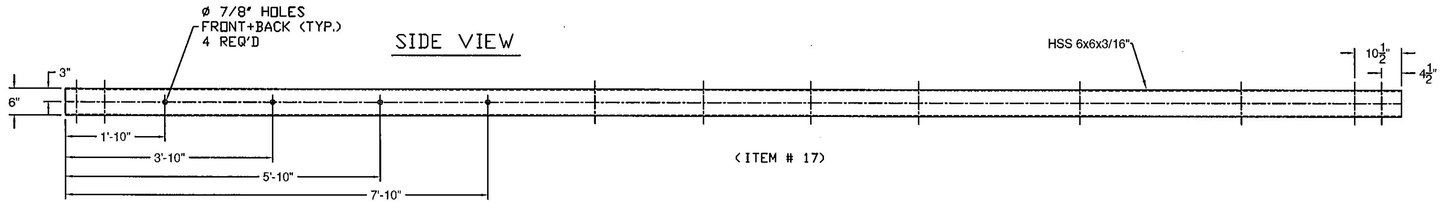

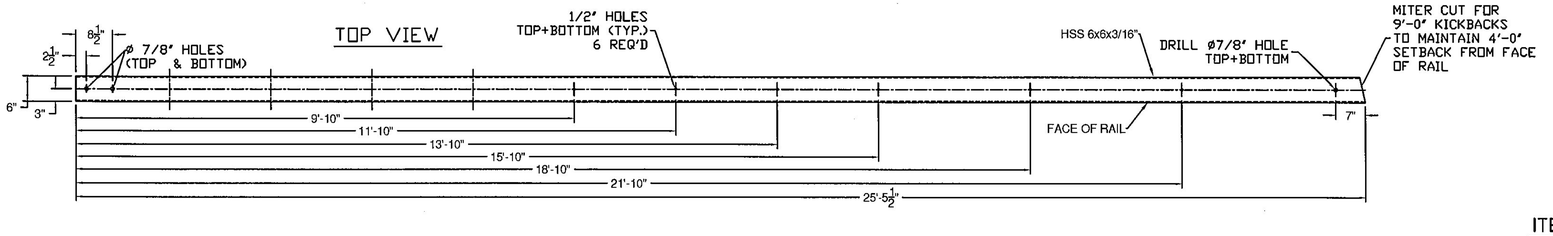

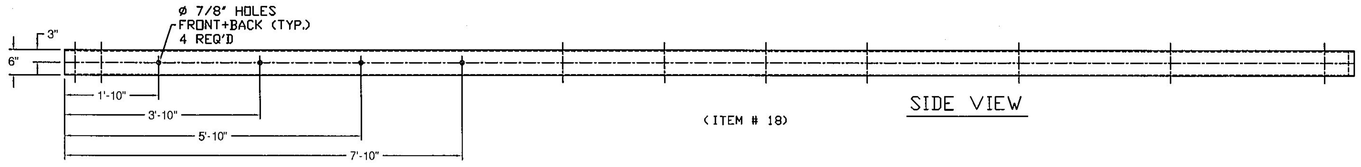

APPROVED: Approval of drawings and/or procedures indicates concurrence with the information presented and does not relieve the Contractor or Fabricator of compliance with all specifications and code requirements		Stantec
APPROVED AS NOTED	X	
REVISE AND RESUBMIT		
NOT REVIEWED		
Date: 3/10/2015		
By: Michael J. Chenette		

This review by Stantec Consulting Services Inc. is for the sole purpose of ascertaining conformance with the general design concept. This review shall not mean that Stantec Consulting Services Inc approves the detail design inherent in the shop drawings, responsibility for which shall remain with the Contractor. Submitting same, and such review shall not relieve the Contractor of his responsibility for errors or omissions in the shop drawing or of his responsibility for meeting all requirements of the Contract Documents. The contractor is responsible for dimensions to be confirmed and correlated at the job site, for information that pertains solely to the fabrication processes or to techniques of construction and installation and for coordination of the work of all subtrades.

ITEM #: 900.620

SHEET 5 OF 5

STRUCTURAL STEEL TO COMPLY W/ ASTM A6

TOLERANCE UNLESS OTHERWISE NOTED:
FRACTIONS = ± 1/16"
ANGLES = ± 1/2°
DIAMETERS = ± 1/32"

Galvanized 2-Rail Box Beam Guardrail Approach Section

EM14-202, CHICKEN FARM ROAD (T.H.16) CLASS 3 LOCAL ROAD, BRIDGE NO : 36
PROJECT: 618 CORINTH BRO 1447(29), TOWN OF CORINTH, ORANGE COUNTY, VT

R E V	NO.	DATE	DESCRIPTION	BY
	1	3/5/15	REVISED PER 3/4/15 MARK-UP	E.P.

R E V	NO.	DATE	DESCRIPTION	BY

ELDERLEE, INC.
OAKS CORNERS, NEW YORK 14518
E-Mail: dlong@elderlee.com / epeek@elderlee.com
Tel: 315-789-6670 Fax: 315-789-6615

AISC CERTIFIED FABRICATOR

DRAWN	E.P.	12/15/14
CHECKED	D.L.	12/16/14
APPROVED	M.V.	.
SCALE	SCHEMATIC	
DRAWING NO.	FR L - CORINTH-T	

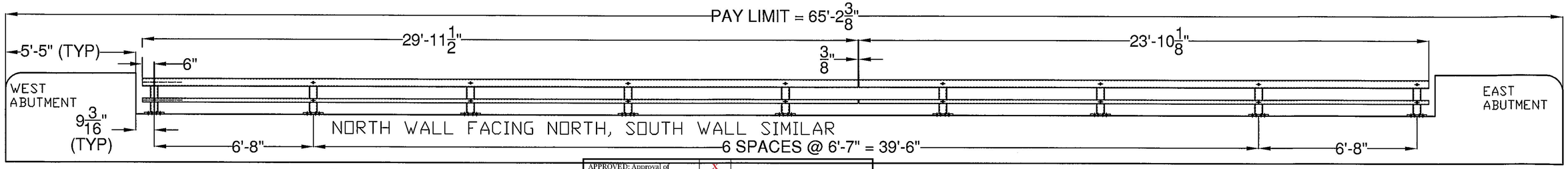

APPROVED: Approval of drawings and/or procedures indicates concurrence with the information presented and does not relieve the Contractor or Fabricator of compliance with all specifications and code requirements	X	Stantec
APPROVED AS NOTED		
REVISE AND RESUBMIT		
NOT REVIEWED		

Date: 2/13/15

By: George Bogue

This review by Stantec Consulting Services Inc. is for the sole purpose of ascertaining conformance with the general design concept. This review shall not mean that Stantec Consulting Services Inc approves the detail design inherent in the shop drawings, responsibility for which shall remain with the Contractor. Submitting same, and such review shall not relieve the Contractor of his responsibility for errors or omissions in the shop drawing or of his responsibility for meeting all requirements of the Contract Documents. The contractor is responsible for dimensions to be confirmed and correlated at the job site, for information that pertains solely to the fabrication processes or to techniques of construction and installation and for coordination of the work of all subtrades.

COATED BLACK - ASTM D7803

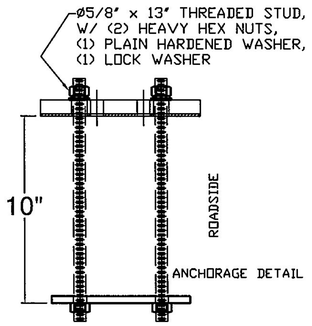

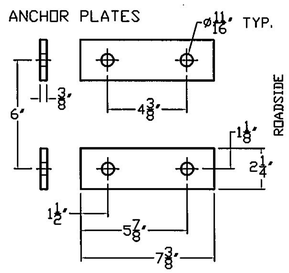

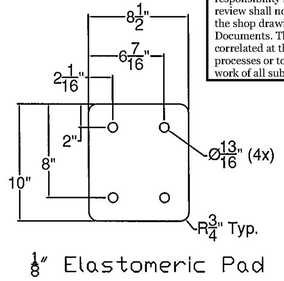

1/8" Elastomeric Pad

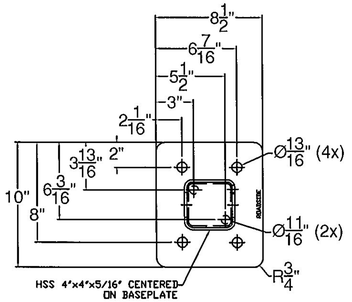

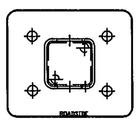

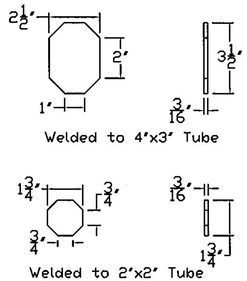

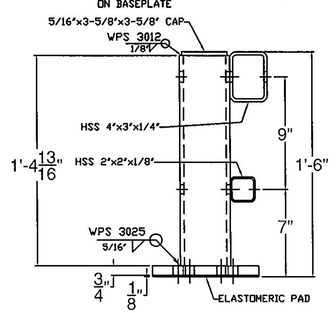

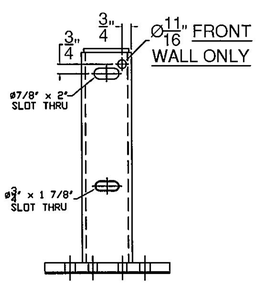

BILL OF MATERIAL

ITEM #	QTY	PART #	DESCRIPTION	ASTM DESIGNATION
1	18	0033.90017	TWO RAIL POST & BASE PLATE ASSEMBLY	A572 Gr. 50, A500 Gr. B
2	2	0033.91287	4" X 3" X 1/4" RAIL @ 29'-11 1/2" W/ END PLATES	A500 Gr. B
3	2	0033.91288	4" X 3" X 1/4" RAIL @ 23'-10 1/8" W/ END PLATES	A500 Gr. B
4	2	0033.91289	2" X 2" X 1/8" RAIL @ 29'-11 1/2" W/ END PLATES	A500 Gr. B
5	2	0033.91290	2" X 2" X 1/8" RAIL @ 23'-10 1/8" W/ END PLATES	A500 Gr. B
6	2	0033.90069	1-1/2" X 1-1/2" FIX. SPL BAR @ 2' 4"	A572 Gr. 50
7	2	0033.90071	2-1/4" X 3-1/4" FIX. SPL. BAR @ 2' 4"	A572 Gr. 50
8	36	0033.00295	3/8" X 2 1/4" X 7 3/8" ANCHOR PLATES	A36
9	74*	0042.05813	ø 5/8" X 13" ANCHOR STUDS	A449
10	146*	0080.15901	ø 5/8" HEAVY HEX NUTS	A563
11	72	0080.15911	ø 5/8" FLAT WASHERS	F436
12	72	0080.15920	ø 5/8" LOCK WASHERS	ASME D18.2
13	18	0080.05565	ø 5/8" X 7 1/2" SLOTTED, ROUND HEAD BOLT, NUT, F.W., & L.W.	A449, A563, F436, & ASME D18.2
14	18	0080.06410	ø 3/4" X 8 1/2" SLOTTED, ROUND HEAD BOLT, NUT, F.W., & L.W.	A449, A563, F436, & ASME D18.2
15	8	0080.05275	ø 5/8" X 3" HEX BOLT, NUT, F.W., & L.W.	A325, A563, F436, & ASME D18.2
16	8	0080.07330	ø 7/8" X 5 1/2" HEX BOLT, NUT, F.W., & L.W.	A325, A563, F436, & ASME D18.2
17	18	0033.90068	1/8" ELASTOMERIC PAD	D2240
18	2	0033.40375	APPROACH, END WALL CONNECTORS	PER BOM
19	2	0033.40376	TRAILING, END WALL CONNECTORS	PER BOM
20	6		DELINEATORS (SUPPLIED BY F.R. LaFAYETTE)	ALUMINUM

*-2 EXTRA FOR VOAT TESTING

HARDWARE NOTES

ITEM #	FUNCTION
13	BOLT BOTTOM RAIL TO POST (ITEM #1)
14	BOLT TOP RAIL TO POST (ITEM #1)
15	BOLT BOTTOM SPLICE BARS (ITEM #6) TO BOTTOM RAIL
16	BOLT TOP SPLICE BARS (ITEM #7) TO TOP RAIL

NOTES:

1. ALL WORK AND MATERIALS SHALL CONFORM TO SECTION 525.
2. PRIOR TO GALVANIZING THE ASSEMBLED POST, GRIND ALL EDGES TO A MINIMUM RADIUS OF 1/16".
3. ALL POSTS SHALL BE SET NORMAL TO GRADE.
4. SECTIONS OF RAIL TUBE SHALL BE ATTACHED TO A MINIMUM OF TWO BRIDGE POSTS AND PREFERABLY TO AT LEAST 4 POSTS.
5. HOLES IN RAILS FOR TUBE ATTACHMENT, WILL BE SHOP-DRILLED. HOLES SHALL BE COATED WITH AN APPROVED ZINC-RICH PAINT PRIOR TO INSTALLATION.
6. BOLTS SHALL BE TORQUED SNUG TIGHT (APPROXIMATELY 100 FT-LB).
7. RAIL TUBES SHALL BE ATTACHED USING FULL DIAMETER BODY ASTM A449 (TYPE I) ROUND HEAD BOLTS INSERTED THROUGH THE FACE OF THE TUBE.
8. SEE STANDARD DRAWING G-1 FOR DETAILS OF DELINEATORS. A DELINEATOR SHALL BE INSTALLED AT 30 FOOT SPACING OR THE NEAREST POST. WHITE IS TO BE INSTALLED ON THE DRIVER'S RIGHT. FOR ONE WAY BRIDGES, YELLOW IS TO BE INSTALLED ON THE DRIVER'S LEFT. PAYMENT FOR DELINEATORS SHALL BE INCIDENTAL TO OTHER ITEMS.
9. AESTHETIC TREATMENT TYPE SHALL BE APPLIED AS SPECIFIED IN THE CONTRACT PLANS. IF NONE IS SPECIFIED IT SHALL NOT BE USED. AESTHETIC TREATMENT DETAILED ON THIS SHEET MAY ALSO BE APPLIED ON THE FASCIA SIDE OF THE RAIL, IF SPECIFIED IN THE CONTRACT PLANS.
10. BRIDGE RAILING SHALL HAVE A RUBBED FINISH IN ACCORDANCE WITH SECTION 501.
11. THIS RAILING MEETS THE REQUIREMENTS FOR A NCHRP REPORT 350 TL-4 SERVICE LEVEL.
12. HOLES FOR MOUNTING DELINEATORS TO BE FIELD DRILLED. HOLES SHALL BE COATED WITH AN APPROVED ZINC-RICH PAINT PRIOR TO INSTALLATION.
13. ALL STEEL COMPONENTS SHALL BE COATED BLACK IN ACCORDANCE WITH ASTM D7803 FOLLOWING GALVANIZING.

ITEM #: 525.45

SHEET 1 OF 3

STRUCTURAL STEEL TO COMPLY W/ ASTM A6

TOLERANCE UNLESS OTHERWISE NOTED:
FRACTIONS = ± 1/16"
ANGLES = ± 1/2°
DIAMETERS = ± 1/32"

BRIDGE RAIL DETAILS SHEET

CHICKEN FARM ROAD (T.H. 16) CLASS 3 LOCAL ROAD, BRIDGE # 36
TOWN OF CORINTH, ORANGE COUNTY

R	NO.	DATE	DESCRIPTION	BY
E				
V				

R	NO.	DATE	DESCRIPTION	BY
E				
V				

ELDERLEE, INC.
OAKS CORNERS, NEW YORK 14518
E-Mail: dlong@elderlee.com / epeek@elderlee.com
Tel: 315-789-6670 Fax: 315-789-6615

CERTIFIED FABRICATOR

DRAWN	E.P.	11/24/14
CHECKED	D.L.	11/25/14
APPROVED	.	.
SCALE	SCHEMATIC	
DRAWING NO.	FR L - CORINTH	

Ø15/16" THRU TUBE & SPLICE BAR,
Ø7/8"X5 1/2" HEX BOLT & NUT,
W/ (1) PLAIN HARDENED WASHER &
(1) LOCK WASHER (4 PLACES)

TOP RAIL FIXED SPLICE DETAIL

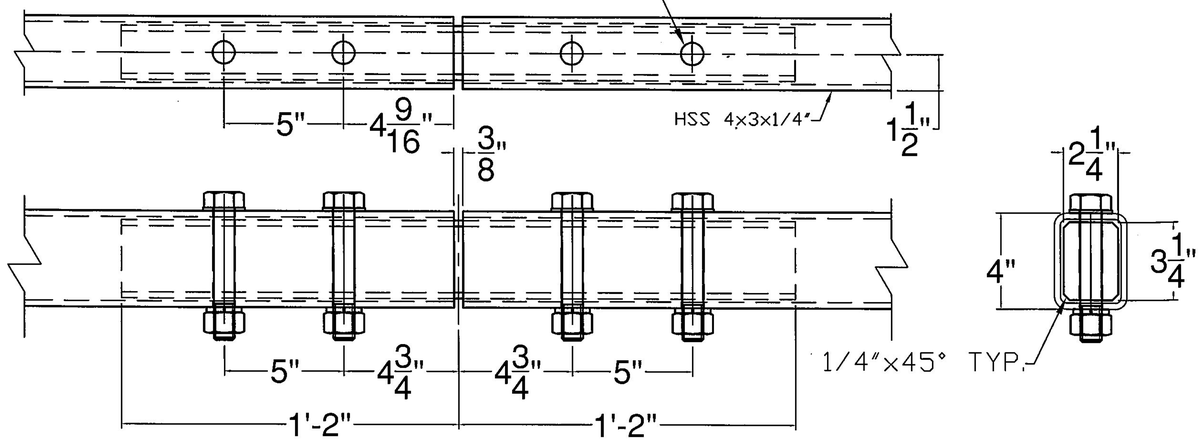

Ø11/16" THRU TUBE & SPLICE BAR,
Ø5/8"X3" HEX BOLT & NUT,
W/ (1) PLAIN HARDENED WASHER &
(1) LOCK WASHER (4 PLACES)

BOTTOM RAIL FIXED SPLICE DETAIL

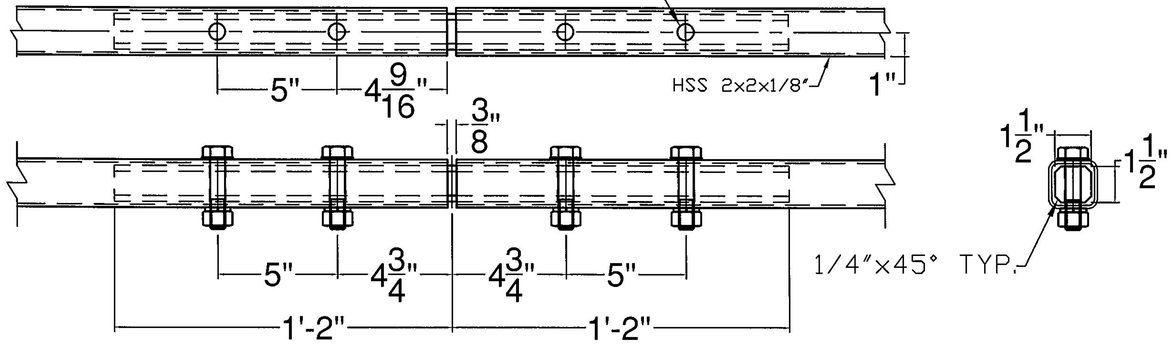

APPROVED: Approval of drawings and/or procedures indicates concurrence with the information presented and does not relieve the Contractor or Fabricator of compliance with all specifications and code requirements	X	Stantec
APPROVED AS NOTED		
REVISE AND RESUBMIT		
NOT REVIEWED		
Date: 2/13/15		
By: George Bogue		

This review by Stantec Consulting Services Inc. is for the sole purpose of ascertaining conformance with the general design concept. This review shall not mean that Stantec Consulting Services Inc approves the detail design inherent in the shop drawings, responsibility for which shall remain with the Contractor. Submitting same, and such review shall not relieve the Contractor of his responsibility for errors or omissions in the shop drawing or of his responsibility for meeting all requirements of the Contract Documents. The contractor is responsible for dimensions to be confirmed and correlated at the job site, for information that pertains solely to the fabrication processes or to techniques of construction and installation and for coordination of the work of all subtrades.

ITEM #: 525.45

STRUCTURAL STEEL TO COMPLY W/ ASTM A6

TOLERANCE UNLESS OTHERWISE NOTED:
FRACTIONS = ± 1/16"
ANGLES = ± 1/2°
DIAMETERS = ± 1/32"

BRIDGE RAIL DETAILS SHEET

CHICKEN FARM ROAD (T.H. 16) CLASS 3 LOCAL ROAD, BRIDGE # 36
TOWN OF CORINTH, ORANGE COUNTY

REV	NO.	DATE	DESCRIPTION	BY	REV	NO.	DATE	DESCRIPTION	BY

ELDERLEE, INC.
OAKS CORNERS, NEW YORK 14518
E-Mail: dlong@elderlee.com / epeek@elderlee.com
Tel: 315-789-6670 Fax: 315-789-6615

CERTIFIED STEEL FABRICATOR

DRAWN	E.P.	11/24/14
CHECKED	D.L.	.
APPROVED	.	.
SCALE	SCHEMATIC	
DRAWING NO.	FR L - CORINTH	

BILL OF MATERIALS			
ITEM #	QTY	DESCRIPTION	ASTM #
1	1	DBL TUBE WALL PLATE - 1" X 12" x 25'	ASTM A572 Gr. 50
2	12	ø3/4" X 8" STUD	TO BE PURCHASED
3	2	5" X 5" X 5/16" TUBE W/ SLOTS @ 18"	ASTM A500 Gr. B
4	2	SHIM PL 1/2" X 4" X 17" W/ SLOTS	ASTM A36(ASTM A709 Gr. 36)CVN
5	2	SHIM PL 1/2" X 4" X 17" (W/O SLOTS)	ASTM A36(ASTM A709 Gr. 36)CVN

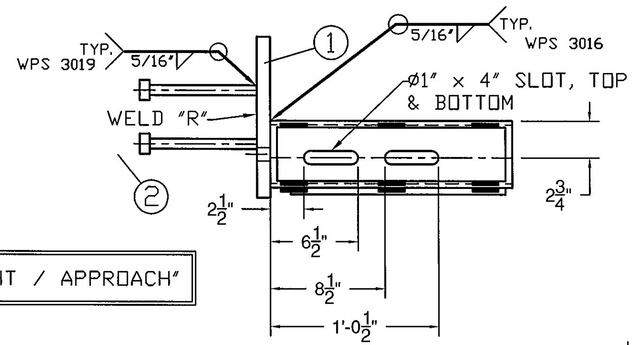

"RIGHT / APPROACH"

PROTRUSIONS CAUSED BY WELDING OR GALVANIZING ARE NOT PERMITTED ON THE SPLICE TUBES AND FILL PLATES

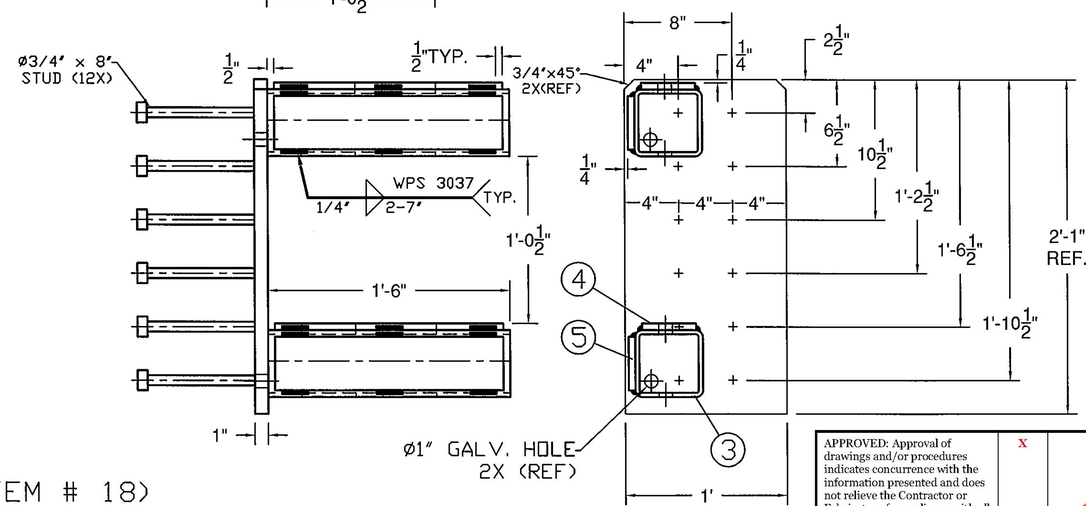

(ITEM # 18)

BILL OF MATERIALS			
ITEM #	QTY	DESCRIPTION	ASTM #
1	1	DBL TUBE WALL PLATE - 1" X 12" x 25'	ASTM A572 Gr. 50
2	12	ø3/4" X 8" STUD	TO BE PURCHASED
3	2	5" X 5" X 5/16" TUBE W/ SLOTS @ 18"	ASTM A500 Gr. B
4	2	SHIM PL 1/2" X 4" X 17" W/ SLOTS	ASTM A36(ASTM A709 Gr. 36)CVN
5	2	SHIM PL 1/2" X 4" X 17" (W/O SLOTS)	ASTM A36(ASTM A709 Gr. 36)CVN

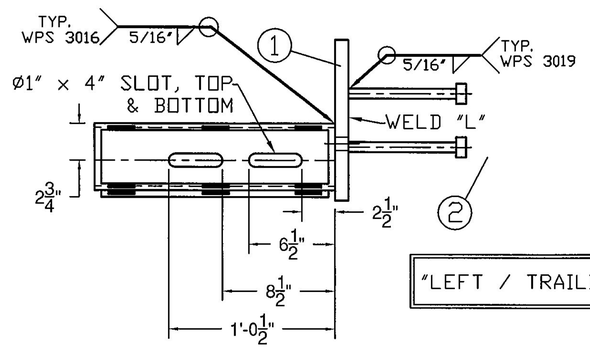

"LEFT / TRAILING"

PROTRUSIONS CAUSED BY WELDING OR GALVANIZING ARE NOT PERMITTED ON THE SPLICE TUBES AND FILL PLATES

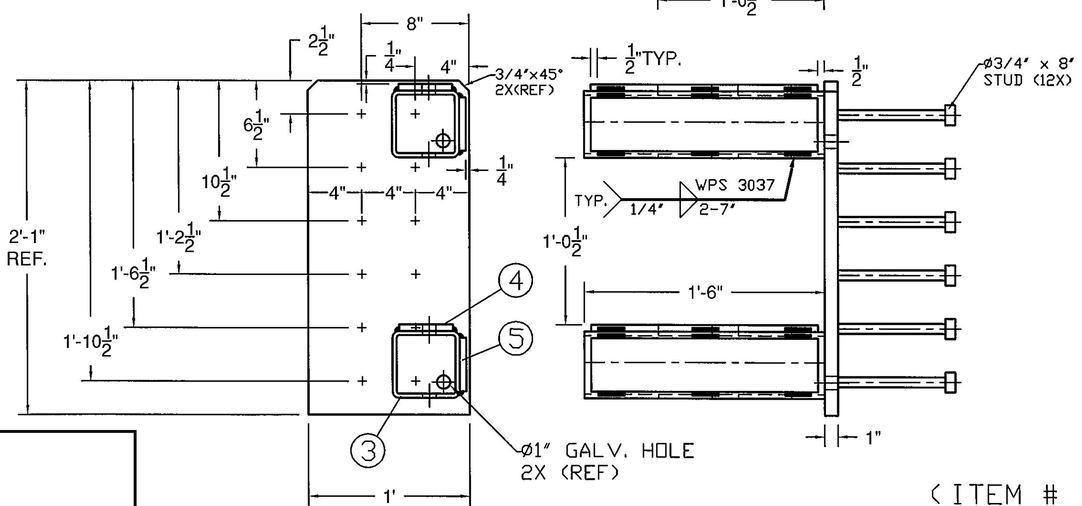

(ITEM # 19)

APPROVED: Approval of drawings and/or procedures indicates concurrence with the information presented and does not relieve the Contractor or Fabricator of compliance with all specifications and code requirements	X	Stantec
APPROVED AS NOTED		
REVISE AND RESUBMIT		
NOT REVIEWED		
Date: 2/13/15		
By: George Bogue		

This review by Stantec Consulting Services Inc. is for the sole purpose of ascertaining conformance with the general design concept. This review shall not mean that Stantec Consulting Services Inc approves the detail design inherent in the shop drawings, responsibility for which shall remain with the Contractor. Submitting same, and such review shall not relieve the Contractor of his responsibility for errors or omissions in the shop drawing or of his responsibility for meeting all requirements of the Contract Documents. The contractor is responsible for dimensions to be confirmed and correlated at the job site, for information that pertains solely to the fabrication processes or to techniques of construction and installation and for coordination of the work of all subtrades.

ITEM #: 525.45

SHEET 3 OF 3

STRUCTURAL STEEL TO COMPLY W/ ASTM A6

TOLERANCE UNLESS OTHERWISE NOTED:
FRACTIONS = ± 1/16"
ANGLES = ± 1/2°
DIAMETERS = ± 1/32"

BRIDGE RAIL DETAILS SHEET

CHICKEN FARM ROAD (T.H. 16) CLASS 3 LOCAL ROAD, BRIDGE # 36
TOWN OF CORINTH, ORANGE COUNTY

R E V	NO.	DATE	DESCRIPTION	BY	R E V	NO.	DATE	DESCRIPTION	BY

ELDERLEE, INC.
OAKS CORNERS, NEW YORK 14518
E-Mail: dlong@elderlee.com / epeek@elderlee.com
Tel: 315-789-6670 Fax: 315-789-6615

CERTIFIED FABRICATOR

DRAWN	E.P.	11/24/14
CHECKED	D.L.	.
APPROVED	.	.
SCALE	SCHEMATIC	
DRAWING NO.	FR L - CORINTH	

Corinth BRO 1447(29)

WELDING PROCEDURE SPECIFICATION

Material Specification	A36 TO A500
Welding Process	FCAW
Manual or Machine	SEMAUTOMATIC
Position of Welding	FLAT / HORIZONTAL
Filler Metal Specification	A5.20 - 95
Filler Metal Classification	E81T1-Ni1C-JH4
Flux	N/A
Shielding Gas	CO 2 Dew Point -40DEG F Flow Rate 50CFH
Single or Multiple Pass	SINGLE
Single or Multiple Arc	SINGLE
Welding Current	DC
Polarity	REVERSE ELECTRODE POSITIVE
Welding Progression	STRINGER
Root Treatment	PER D1.5
Preheat and Interpass Temperature	PER D1.5
Postheat Temperature	NONE
Heat Input	Min _____ Max _____

WELDING PROCEDURE

Pass no.	Electrode size	Welding Current		Travel speed	Joint detail
		Amperes	Volts		
1	1/16	300	26	14	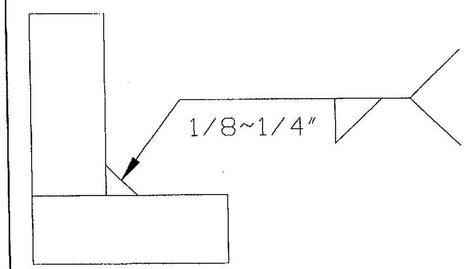
Variable	LIMITS	270 TO 330	24 TO 28	12.6 TO 15.4	

This procedure may vary due to fabrication sequence, fit-up, pass size, etc., within the limitation of variables given in Section 5.

Procedure No. 3006
Revision No. _____

Contractor Elderlee, Inc.
Authorized By RANDY SCOTT
Date 8/4/2014

Form III-2

APPROVED
By Jeff Clark at 11:25 am, Mar 13, 2015

WELDING PROCEDURE SPECIFICATION

PQR ELDERLEE #3

Material Specification	ASTM-A500-A53-GRADE B TO A36			
Welding Process	FCAW-G			
Manual or Machine	SEMAUTOMATIC			
Position of Welding	1G			
Filler Metal Specification	A5.29			
Filler Metal Classification	E81T1-Ni1C-JH4			
Flux	N/A			
Shielding Gas	CO 2	Dew Point	-40DEG F	FLOW RATE 50 CFH
Single or Multiple Pass	SINGLE			
Single or Multiple Arc	SINGLE			
Welding Current	DC			
Polarity	REVERSE ELECTRODE POSITIVE			
Welding Progression	STRINGER			
Root Treatment	PER D1.5			
Preheat and Interpass Temperature	PER. D1.5			
Postheat Temperature	NONE			
Heat Input	Min		Max	

WELDING PROCEDURE

Pass no.	Electrode size	Welding Current		Travel speed
		Amperes	Volts	
1	1/16	310	25	11
Variable	LIMITS	341 TO 269	27 TO 23	12 TO 10

Joint detail

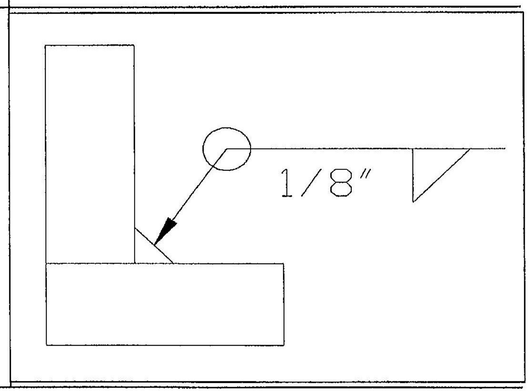

This procedure may vary due to fabrication sequence, fit-up, pass size, etc., within the limitation of variables given in Section 5.

Procedure No. 3012
Revision No.

Contractor Elderlee, Inc.
Authorized By RANDY SCOTT
Date 3/20/2014

APPROVED
By Jeff Clark at 11:25 am, Mar 13, 2015

Corinth BRO 1447(29)

WELDING PROCEDURE SPECIFICATION

PQR ELDERLEE #3

Material Specification	A500 TO A572 GR 50		
Welding Process	FCAW-G		
Manual or Machine	SEMAUTOMATIC		
Position of Welding	FLAT/HORIZONTAL		
Filler Metal Specification	A5.29		
Filler Metal Classification	E81T1-Ni1C-JH4		
Flux	N/A		
Shielding Gas	CO 2	Dew Point -40DEG F Flow Rate	50CFH
Single or Multiple Pass	SINGLE		
Single or Multiple Arc	SINGLE		
Welding Current	DC		
Polarity	REVERSE		
Welding Progression	STRINGER		
Root Treatment	PER D1.5		
Preheat and Interpass Temperature	PER D1.5		
Postheat Temperature	NONE		
Heat Input	Min	Max	

WELDING PROCEDURE

Pass no.	Electrode size	Welding Current Amperes	Welding Current Volts	Travel speed	Joint detail
1	1/16	310	25	11	
Variable	LIMITS	341 TO 269	27 TO 23	12 TO 10	

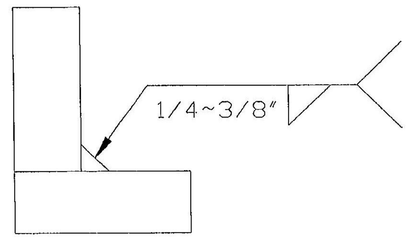

This procedure may vary due to fabrication sequence, fit-up, pass size, etc., within the limitation of variables given in Section 5.

Procedure No. 3016

Revision No.

Contractor Elderlee, Inc.

Authorized By RANDY SCOTT

Date 8/4/2014

APPROVED

By Jeff Clark at 11:26 am, Mar 13, 2015

WELDING PROCEDURE SPECIFICATION

PQR ELDERLEE #3

Material Specification	ASTM A572 GR. 50 TO A325
Welding Process	FCAW-G
Manual or Machine	SEMAUTOMATIC
Position of Welding	FLAT/HORIZONTAL
Filler Metal Specification	A5.29
Filler Metal Classification	E81T1-Ni1C-JH4
Flux	N/A
Shielding Gas	CO 2 Dew Point -40DEG F Flow Rate 50CFH
Single or Multiple Pass	SINGLE
Single or Multiple Arc	SINGLE
Welding Current	DC
Polarity	REVERSE ELECTRODE POSITIVE
Welding Progression	STRINGER
Root Treatment	CLEAN PER D1.5
Preheat and Interpass Temperature	PER D1.5
Postheat Temperature	NONE
Heat Input	Min _____ Max _____

WELDING PROCEDURE

Pass no.	Electrode size	Welding Current Amperes	Welding Current Volts	Travel speed	Joint detail
1	1/16	310	25	11	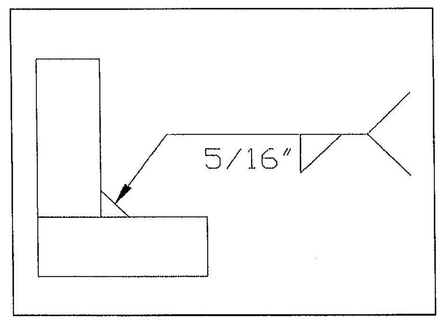
Variable	LIMITS	341 TO 269	27 TO 23	12 TO 10	

This procedure may vary due to fabrication sequence, fit-up, pass size, etc., within the limitation of variables given in Section 5.

Procedure No. 3019
Revision No. _____

Contractor Elderlee, Inc.
Authorized By RANDY SCOTT
Date 7/28/2014

APPROVED
By Jeff Clark at 11:26 am, Mar 13, 2015

Corinth BRO 1447(29)

WELDING PROCEDURE SPECIFICATION

PQR ELDERLEE #3

Material Specification	A572 TO A500
Welding Process	FCAW-G
Manual or Machine	SEMAUTOMATIC
Position of Welding	FLAT/HORIZONTAL
Filler Metal Specification	A5.29
Filler Metal Classification	E81T1-Ni1C-JH4
Flux	N/A
Shielding Gas	CO 2 Dew Point -40DEG F Flow Rate 50CFH
Single or Multiple Pass	SINGLE
Single or Multiple Arc	SINGLE
Welding Current	DC ELECTRODE POSITIVE
Polarity	REVERSE
Welding Progression	STRINGER
Root Treatment	PER D1.5
Preheat and Interpass Temperature	PER D1.5
Postheat Temperature	NONE
Heat Input	Min _____ Max _____

WELDING PROCEDURE

Pass no.	Electrode size	Welding Current		Travel speed	Joint detail
		Amperes	Volts		
1	1/16	310	25	11	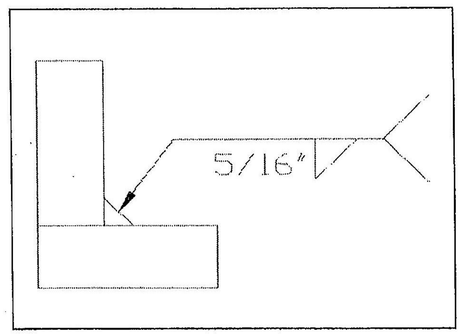
Variable	LIMITS	341 TO 269	27 TO 23	12 TO 10	

This procedure may vary due to fabrication sequence, fit-up, pass size, etc., within the limitation of variables given in Section 5.

Procedure No. 3025

Revision No. _____

Contractor Elderlee, Inc,

Authorized By RANDY SCOTT

Date 12/1/2014

APPROVED

By Jeff Clark at 11:26 am, Mar 13, 2015

WELDING PROCEDURE SPECIFICATION

PQR ELDERLEE #3

Material Specification	ASTM A572 GR. 50 CVN TO A500 GR B
Welding Process	FCAW-G
Manual or Machine	SEMAUTOMATIC
Position of Welding	FLAT/HORIZONTAL
Filler Metal Specification	A5.29
Filler Metal Classification	E81T1-Ni1C-JH4
Flux	N/A
Shielding Gas	CO 2 Dew Point -40DEG F Flow Rate 50CFH
Single or Multiple Pass	SINGLE
Single or Multiple Arc	SINGLE
Welding Current	DC
Polarity	REVERSE ELECTRODE POSITIVE
Welding Progression	STRINGER
Root Treatment	PER D1.5
Preheat and Interpass Temperature	PER D1.5
Postheat Temperature	NONE
Heat Input	Min _____ Max _____

WELDING PROCEDURE

Pass no.	Electrode size	Welding Current Amperes	Welding Current Volts	Travel speed	Joint detail
1	1/16	310	25	11	
Variable	LIMITS	341 TO 269	27 TO 23	12 TO 10	

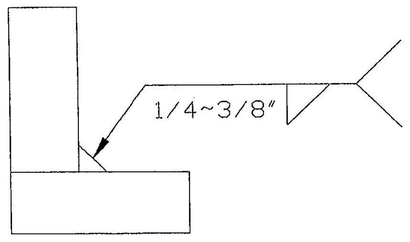

This procedure may vary due to fabrication sequence, fit-up, pass size, etc., within the limitation of variables given in Section 5.

Procedure No. 3037
Revision No. _____

Contractor Elderlee, Inc.
Authorized By RANDY SCOTT
Date 12/1/2014

APPROVED
By Jeff Clark at 11:26 am, Mar 13, 2015

WELDING PROCEDURE SPECIFICATION

PQR ELDERLEE#3

Material Specification	A500 GR B to A572 GR 50
Welding Process	FCAW-G
Manual or Machine	SEMAUTOMATIC
Position of Welding	FLAT/HORIZONTAL
Filler Metal Specification	A5.29
Filler Metal Classification	E81T1-Ni1C-JH4
Flux	N/A
Shielding Gas	CO 2 Dew Point -40DEG F Flow Rate 50CFH
Single or Multiple Pass	SINGLE
Single or Multiple Arc	SINGLE
Welding Current	DC
Polarity	REVERSE ELECTRODE POSITIVE
Welding Progression	STRINGER
Root Treatment	PER D1.5
Preheat and Interpass Temperature	PER D1.5
Postheat Temperature	NONE
Heat Input	Min _____ Max _____

WELDING PROCEDURE

Pass no.	Electrode size	Welding Current Amperes	Welding Current Volts	Travel speed	Joint detail
1	1/16	310	25	11	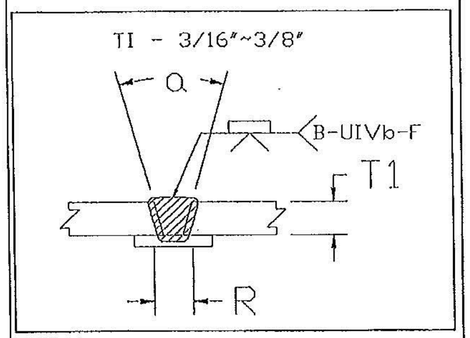
Variable	LIMITS	341 TO 269	27 TO 23	12 TO 10	

This procedure may vary due to fabrication sequence, fit-up, pass size, etc., within the limitation of variables given in Section 5.

Procedure No. 3007

Revision No. _____

CK'D _____ VTrans Received OK'd BY JWC

DEC 29 2014

Resubmit _____ APPROVED ✓

BY _____ DATE 1/5/15

Contractor Elderlee, Inc.

Authorized By RANDY SCOTT

Date 7/28/2014

WELDING PROCEDURE SPECIFICATION

PQR ELDERLEE #3

Material Specification	A709 TO A500 GR B
Welding Process	FCAW-G
Manual or Machine	SEMAUTOMATIC
Position of Welding	FLAT/HORIZONTAL
Filler Metal Specification	A5.29
Filler Metal Classification	E81T1-NI1C-JH4
Flux	N/A
Shielding Gas	CO 2 Dew Point -40DEG F Flow Rate 50CFH
Single or Multiple Pass	SINGLE
Single or Multiple Arc	SINGLE
Welding Current	DC
Polarity	REVERSE ELECTRODE POSITIVE
Welding Progression	STRINGER
Root Treatment	D1.5
Preheat and Interpass Temperature	D1.5
Postheat Temperature	NONE
Heat Input	Min _____ Max _____

WELDING PROCEDURE

Pass no.	Electrode size	Welding Current Amperes	Welding Current Volts	Travel speed	Joint detail
1	1/16	310	25	11	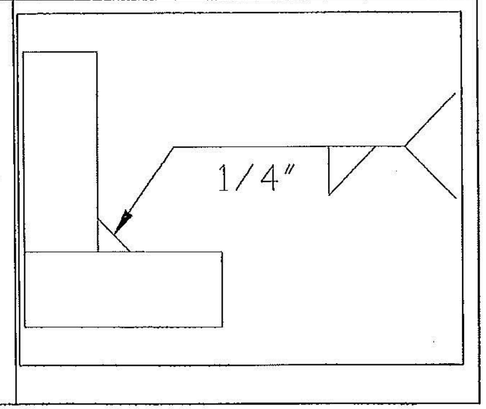
Variable	LIMITS	341 TO 269	27 TO 23	12 TO 10	

This procedure may vary due to fabrication sequence, fit-up, pass size, etc., within the limitation of variables given in Section 5.

Procedure No. 3009

Revision No. _____

Contractor Elderlee, Inc.

Authorized By RANDY SCOTT

Date 3/20/2014

VTrans Received
CK'D _____ OK'd BY JWC

DEC 29 2014

Resubmit _____ APPROVED ✓
BY _____ DATE 1/5/15

WELDING PROCEDURE SPECIFICATION

PQR ELDERLEE #3

Material Specification	A500 TO A572 GR 50
Welding Process	FCAW-G
Manual or Machine	SEMAUTOMATIC
Position of Welding	FLAT/HORIZONTAL
Filler Metal Specification	A5.29
Filler Metal Classification	E81T1-NI1C-JH4
Flux	N/A
Shielding Gas	CO 2 Dew Point -40DEG F Flow Rate 50CFH
Single or Multiple Pass	SINGLE
Single or Multiple Arc	SINGLE
Welding Current	DC
Polarity	REVERSE
Welding Progression	STRINGER
Root Treatment	PER D1.5
Preheat and Interpass Temperature	PER D1.5
Postheat Temperature	NONE
Heat Input	Min _____ Max _____

WELDING PROCEDURE

Pass no.	Electrode size	Welding Current Amperes	Welding Current Volts	Travel speed	Joint detail
1	1/16	310	25	11	
Variable	LIMITS	341 TO 269	27 TO 23	12 TO 10	

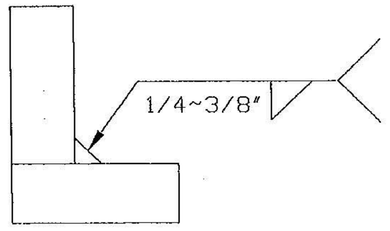

This procedure may vary due to fabrication sequence, fit-up, pass size, etc., within the limitation of variables given in Section 5.

Procedure No. 3016

Revision No. _____

Contractor Elderlee, Inc.

Authorized By RANDY SCOTT

Date 8/4/2014

Vfrans
Received
CK'D _____ OK'd BY JWC

DEC 29 2014

Resubmit _____ APPROVED ✓
BY _____ DATE 1/5/15

WELDING PROCEDURE SPECIFICATION

Material Specification	A572 GR 50
Welding Process	GMAW
Manual or Machine	SEMIAUTOMATIC/ROBOTIC
Position of Welding	FLAT/HORIZONTAL
Filler Metal Specification	A5.18
Filler Metal Classification	L-56 LINCOLN
Flux	N/A
Shielding Gas	90% ARGON /10% CO2 Dew Point -40DEG F Flow Rate 45CFH
Single or Multiple Pass	SINGLE
Single or Multiple Arc	SINGLE
Welding Current	DC
Polarity	REVERSE
Welding Progression	STRINGER
Root Treatment	PER D1.5
Preheat and Interpass Temperature	PER D1.5
Postheat Temperature	NONE
Heat Input	Min _____ Max _____

WELDING PROCEDURE

Pass no.	Electrode size	Welding Current		Travel speed	Joint detail
		Amperes	Volts		
	.045	190	22	19	
Variable	LIMITS	171 TO 209	20 TO 24	17 TO 21	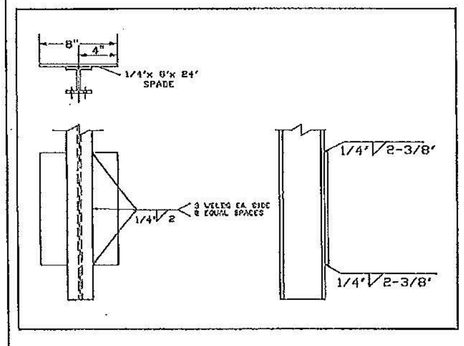

This procedure may vary due to fabrication sequence, fit-up, pass size, etc., within the limitation of variables given in Section 5.

Procedure No. 3022
Revision No. _____

Contractor Elderlee, Inc.
Authorized By RANDY SCOTT
Date 3/20/2014

VTrans Received
CK'D _____ OK'd BY JWC
DEC 29 2014
Resubmit _____ APPROVED
BY _____ DATE 1/5/15