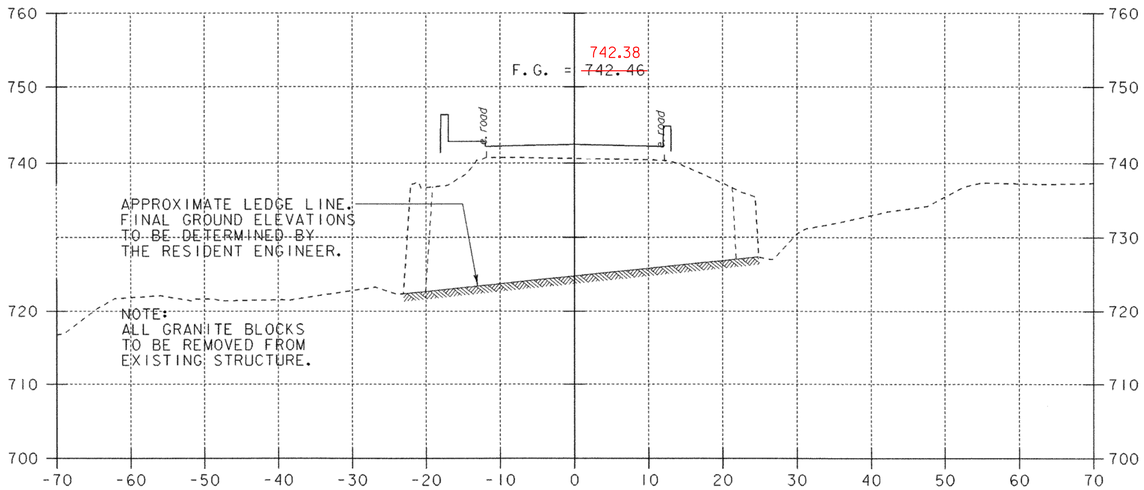

7+00

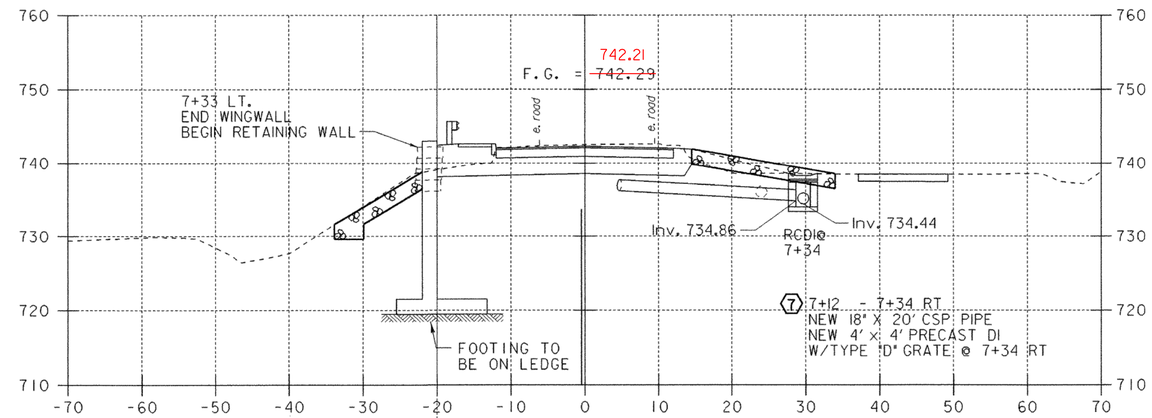

7+25

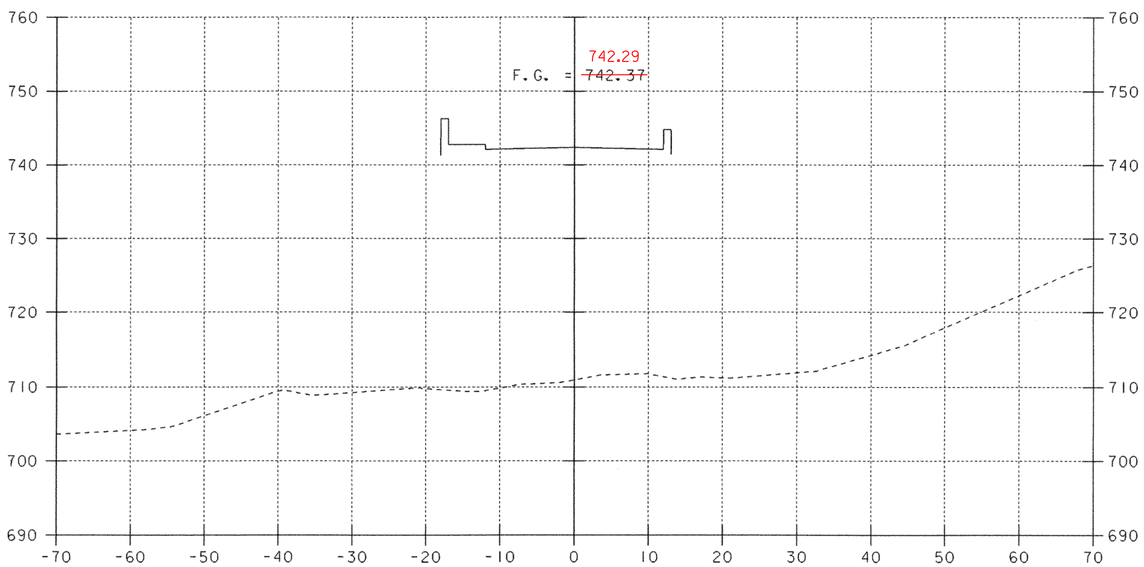

6+75

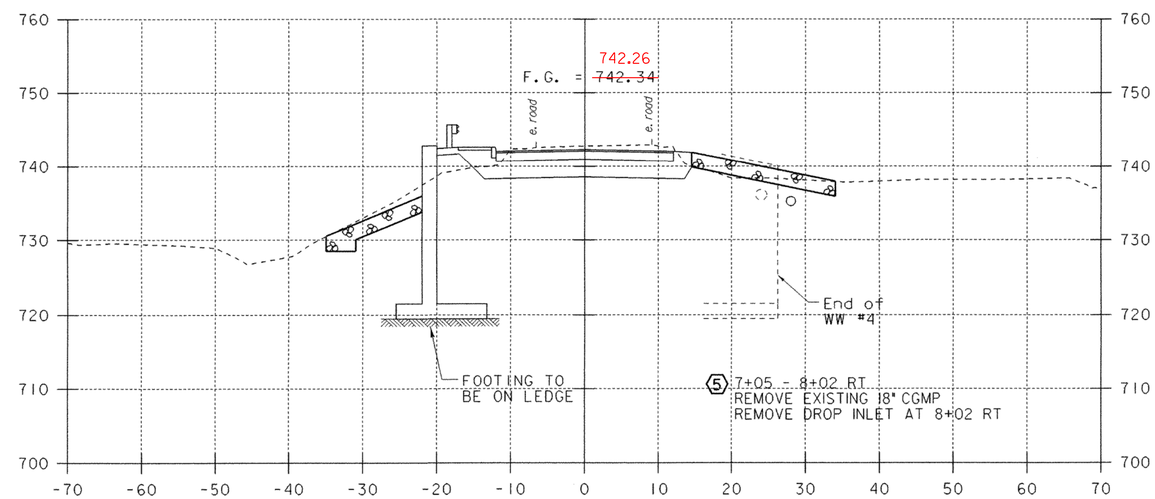

7+20

ROADWAY CROSS SECTIONS

PROJECT NAME:	BARTON
PROJECT NUMBER:	BRO 1449 (29)

0 10 20
SCALE

FILE NAME: /str5/01j168/sj168xs.dgn	PLOT DATE: 02-APR-2007
PROJECT LEADER: W. SYMONDS	DRAWN BY: G. SHANGRAW
DESIGNED BY: W. SYMONDS	CHECKED BY: J. LACROIX
sj168x3.1	SHEET 72 OF 84