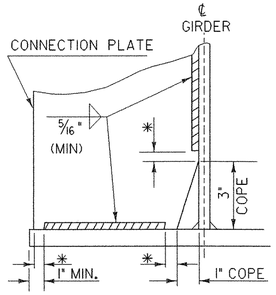

*NO WELD FOR 1/4" MIN. 1/2" MAX.
(EXCEPT MUST MAINTAIN 1" MINIMUM FROM EDGE OF FLANGE)

WELD TERMINATION AND COPING DETAILS FOR WELDED PLATE MEMBERS

NTS

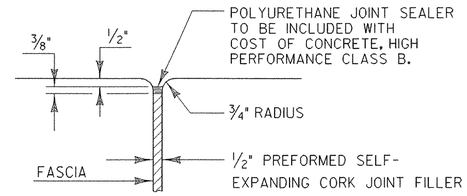

JOINT BETWEEN FASCIA AND WINGWALL

NTS

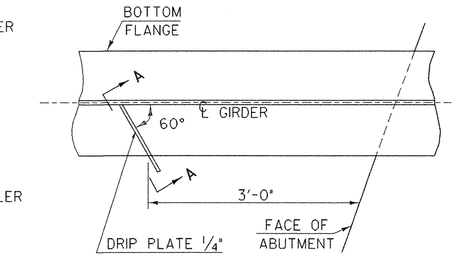

PLAN DRIP PLATE

NTS

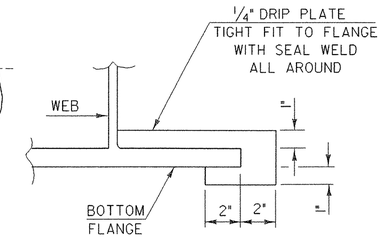

SECTION A - A

NTS

NOTE: DRIP PLATES SHALL BE PLACED ON OUTSIDE EDGE OF FASCIA GIRDERS ON THE HIGH SIDE OF ALL PIERS AND ABUTMENTS OR AS INDICATED ON PROJECT PLANS.

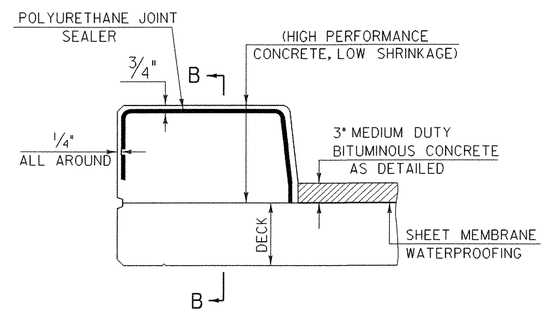

TYPICAL SECTION THROUGH CONCRETE CURB CONSTRUCTION JOINT

NTS

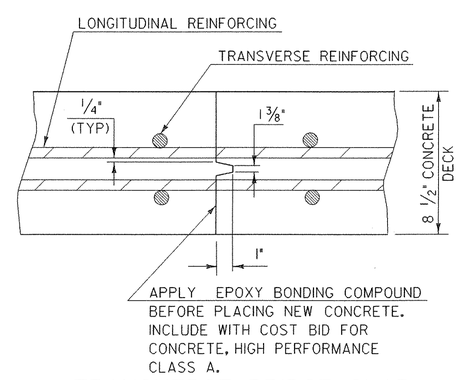

TRANSVERSE BRIDGE SLAB CONSTRUCTION JOINT DETAILS

NTS

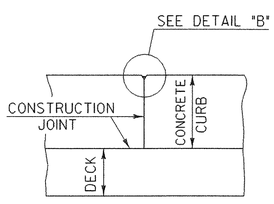

OPTIONAL CONSTRUCTION JOINT

NTS

NOTE: 1. CONCRETE SHALL BE PLACED IN ALTERNATING SECTIONS WITH A MINIMUM OF 48 HOURS DELAY BETWEEN ADJACENT POURS.

2. LONGITUDINAL REINFORCING SHALL PASS THROUGH CONCRETE CURB CONSTRUCTION JOINTS.

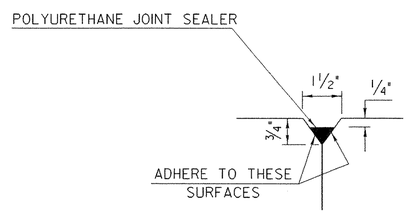

DETAIL "B"

NTS

NOTE: MATERIAL AND APPLICATION FOR POLYURETHANE JOINT SEALER SHALL MEET THE REQUIREMENTS OF SUBSECTIONS 707.05 AND 524.06 OF THE STANDARD SPECIFICATIONS. PAYMENT SHALL BE MADE INCIDENTAL TO ITEM 501.33

SUPERSTRUCTURE DETAILS

PROJECT NAME:	BARTON
PROJECT NUMBER:	BRO 1449 (29)

FILE NAME: /str5/01j168/sj168sup.dgn	PLOT DATE: 02-APR-2007
PROJECT LEADER: W. SYMONDS	DRAWN BY: J. GILMORE
DESIGNED BY: J. REED	CHECKED BY: J. REED
sj168ssd.i	SHEET 52 OF 84