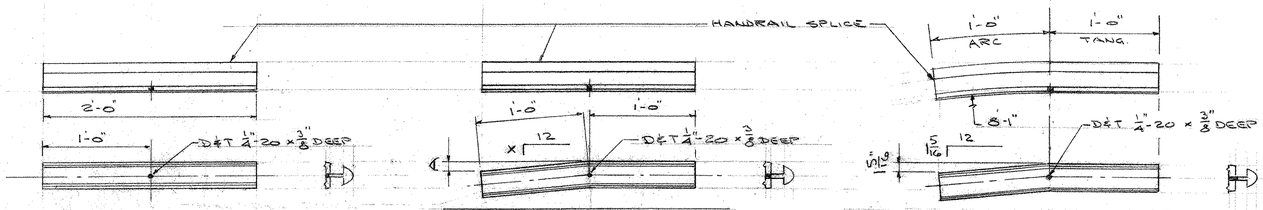

(14) HS1

QUAN	MK	X	A
2	HS2	1 1/4	1 1/4"
1	HS3	15/16	15/16"

(1) HS4

SET SCREWS AT HANDRAIL SPLICES TO BE SHIPPED LOOSE

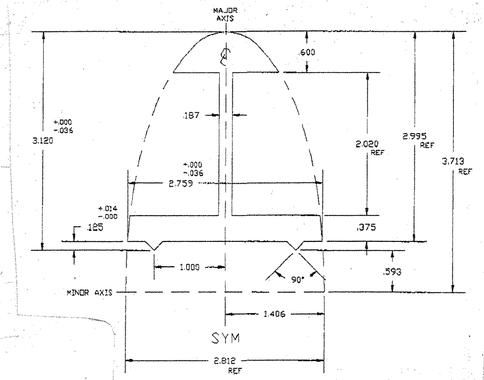

HANDRAIL SPLICE EXTRUSION

ALLOY 6061-T6

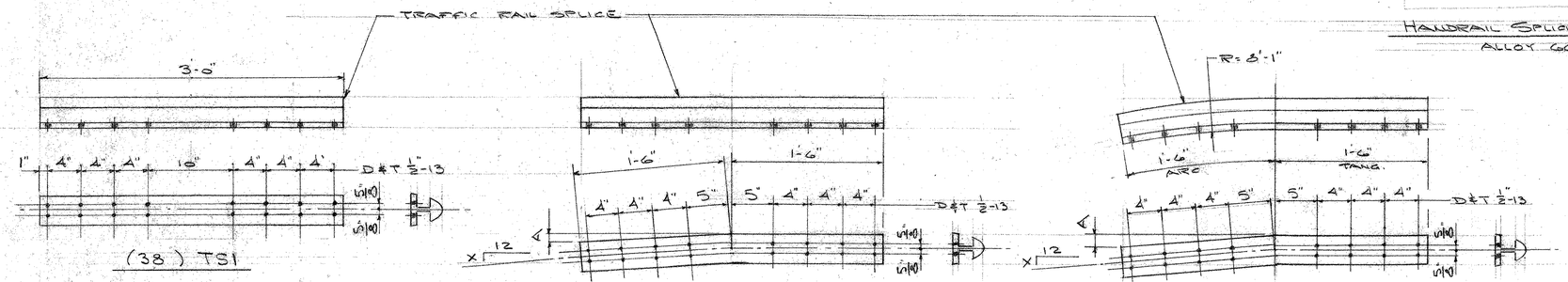

(38) TS1

QUAN	MK	X	A
TS2	4	5/8	7/8"
TS3	2	7/16	11/16"
TS4	2	3/8	9/16"
TS5	4	3/16	1/4"

QUAN	MK	X	A
1	TS6	3/8	9/16"
1	TS7	3/4	1 1/8"

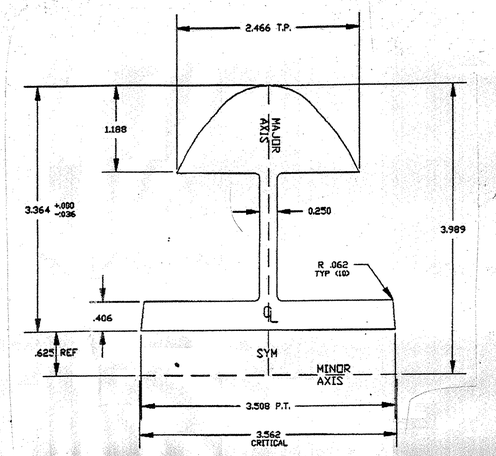

TRAFFIC RAIL SPLICE EXTRUSION

ALLOY 6061-T6

SHOP DRAWINGS ARE REVIEWED UNLESS NOTED OTHERWISE

NO EXCEPTION TAKEN	✓
REVISE AS NOTED RESUBMISSION NOT REQUIRED	
REVISE AS NOTED RESUBMISSION REQUIRED	
REJECTED	

Stantec

DATE 3/26/07

SIGNED Michael Abbott

REVIEW IS GENERAL ONLY AND CONFORMS WITH THE DESIGN CONCEPT OF THE PROJECT AS INTERPRETED FROM THE SUBMITTED SHOP DRAWINGS. THE CONTRACTOR IS RESPONSIBLE FOR DIMENSIONS, FABRICATION AND CONSTRUCTION METHODS, COORDINATION OF SUB-TRADES, DETAIL DESIGN OF COMPONENTS, AND ERRORS OR OMISSIONS ON SHOP DRAWINGS.

RECEIVED
CK'D BY _____ CK'D BY _____
FEB 28 2007
RESUBMIT _____ APPROVED _____
BY _____ DATE

ISSUE	DATE	DESCRIPTION	BY
1	2-22-02	FOR APPROVAL	RJA

AUCIELLO IRON WORKS INC
560 MAIN ST. HUDSON, MA (978) 568-8382

VT. AGENCY OF TRANSPORTATION
HUNTINGTON PROJ. BRO 1445 (29)
BRIDGE #42

EAST ST. OVER HUNTINGTON RIVER

AL. BRIDGE & APPROACH RAILING

SURFACE PREP:	FINISH:
NONE	MILL FINIS

FOR: A.D. ROSSI CORP.

DR: WM 2-16-07
CHK: 2-17-07

DWG. NO. BR-2898

JOB NO. AB70002-1001

SHEET 6 OF 8

126 BR

BL MANUFACIE INC. 10016