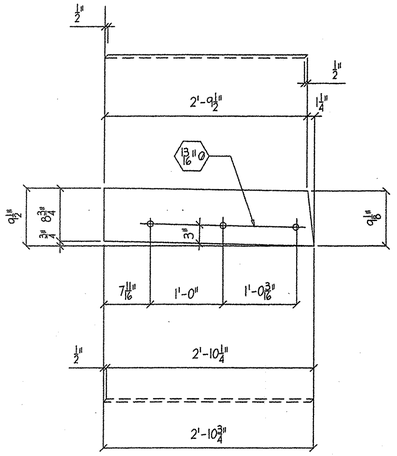

ONE REQ - P11

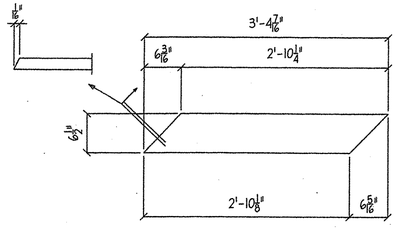

ONE REQ - P12

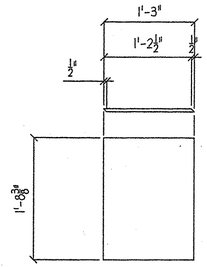

ONE REQ - P13

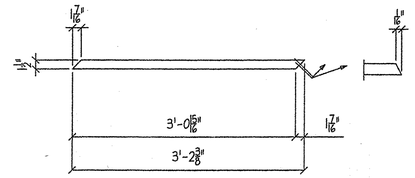

ONE REQ - P14

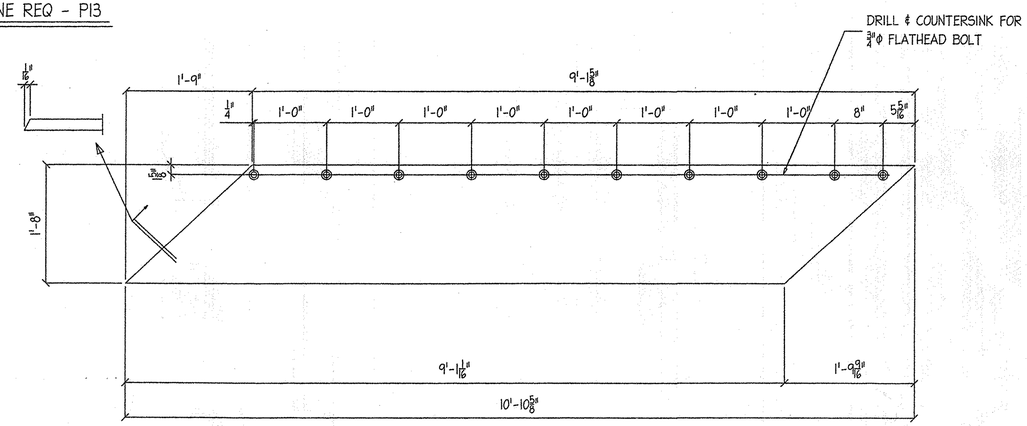

ONE REQ - P17

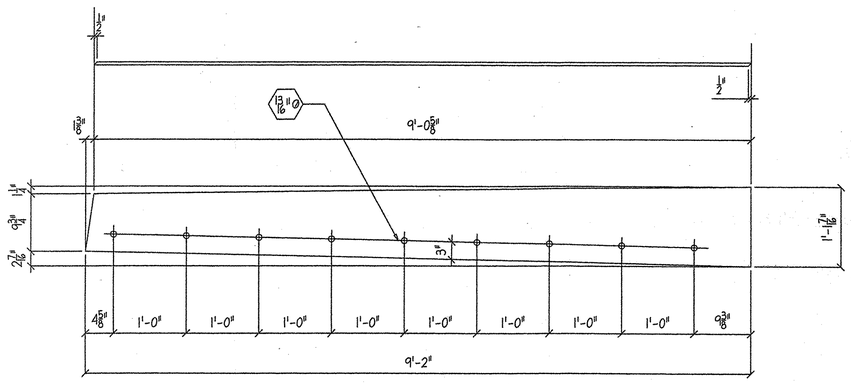

ONE REQ - P15

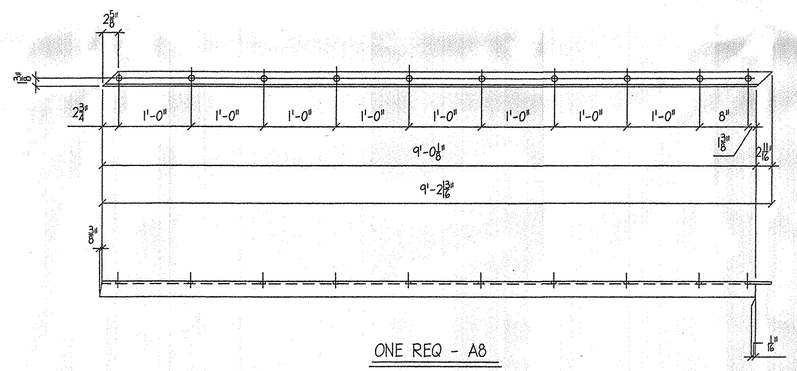

ONE REQ - A8

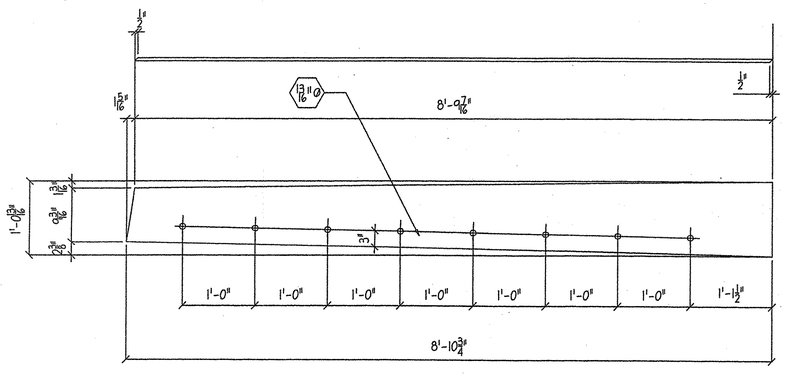

ONE REQ - P16

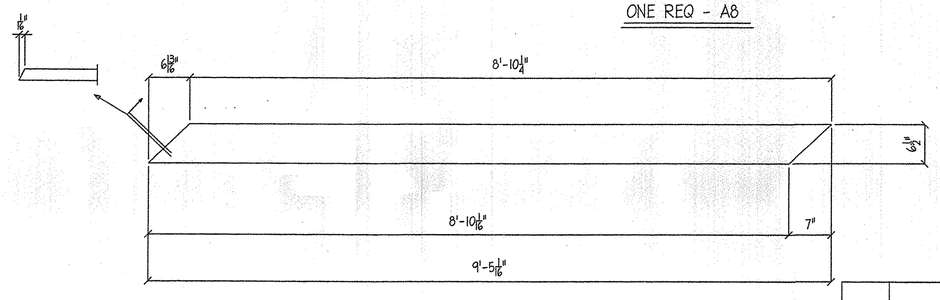

ONE REQ - P18

BILL OF MATERIAL

QTY	MARK	SHAPE	LENGTH		REMARKS
1	P11	PL 1/2" X 9 1/2"	2	10 3/4	GALV.
1	P12	PL 1/2" X 6 1/2	3	4 7/16	
1	P13	PL 1/2" X 15"	1	8 3/8	
1	P14	P 5/8" X 1 1/2"	3	2 3/8	
1	P15	P 1/2" X 13 7/16"	9	2	
1	P16	P 1/2" X 12 13/16"	8	10 3/4	
1	P17	P 1/2" X 20"	10	10 5/8	
1	P18	P 1/2" X 6 1/2"	9	5 1/16	
1	A8	L 2 1/2 X 2 1/ X 3/8	9	2 3/4	

SHOP DRAWINGS ARE REVIEWED UNLESS NOTED OTHERWISE
NO EXCEPTION TAKEN ✓
REVISE AS NOTED
RESUBMISSION NOT REQUIRED
REVISE AS NOTED
RESUBMISSION REQUIRED
REJECTED
Stantec
DATE January 2nd 2007
SIGNATURE Scott Burbank
REVIEW BY STANTEC IS FOR THE SOLE PURPOSE OF ASCERTAINING GENERAL CONFORMITY WITH DESIGN. CONTRACTOR IS RESPONSIBLE FOR DIMENSIONS, FABRICATION AND CONSTRUCTION METHODS, COORDINATION OF SUB-TRADES, DETAIL DESIGN OF COMPONENTS, AND ERRORS OR OMISSIONS ON SHOP DRAWINGS.

REV. NO.	DATE	DESCRIPTION

HOLES: 13/16"Ø (U.N.O.) DATE: 11-20-06
PAINT:

STATE
PROJECT # BRO 1445 (29)

EXPANSION JOINT (EJ-1) FAB DETAILS

DATE SUB.	PROJECT	EAST STREET (T.H. #4) OVER HUNTINGTON RIVER
	LOCATION	HUNTINGTON VT.
	ARCHITECT	
DATE APP.	ENGINEER	STATE OF VERMONT , AGENCY OF TRANSPROTATION
DATE DIST.	CUSTOMER	PARENT CONSTRUCTION

MERRIMACK

MISCELLANEOUS IRON
STRUCTURAL STEEL
FABRICATORS

MERRIMACK SHEET METAL
119 HALL ST.
CONCORD, N.H., 03301
TEL. (603) 224-7766
FAX. (603) 224-7925

DR BY KJM
REV BY JD
JOB NO. 0922
DWG NO. F2

1/6 ES