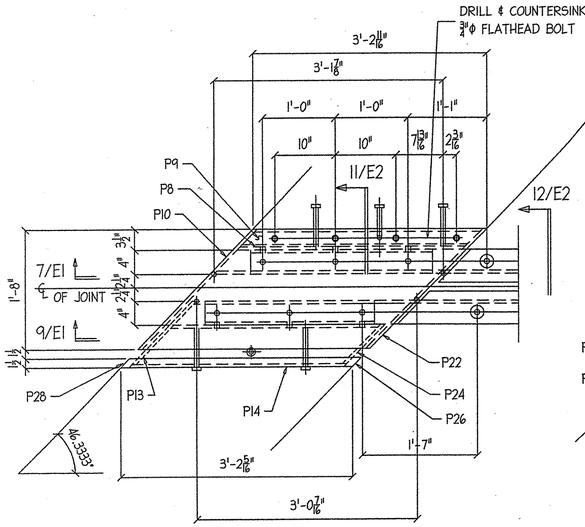

DETAIL - 5/EI

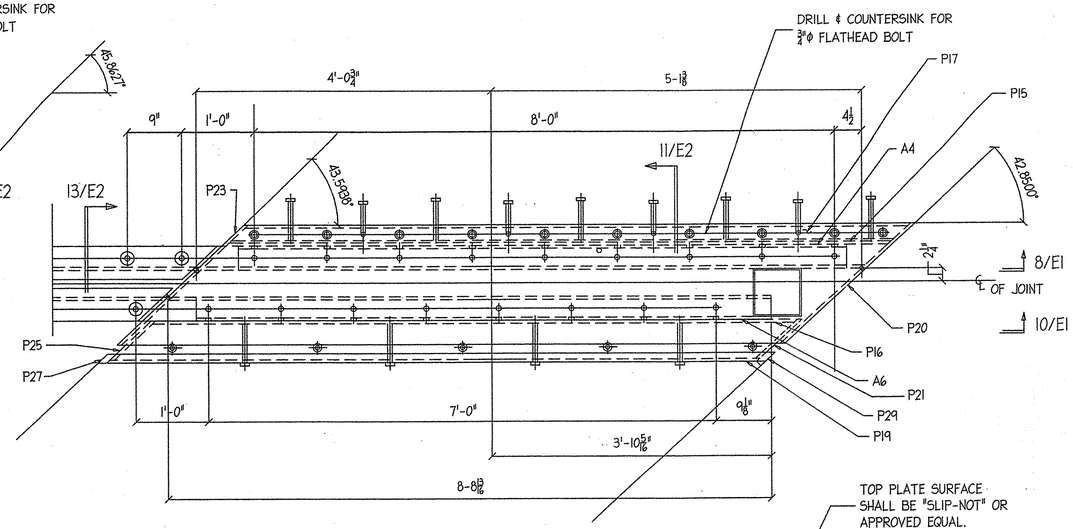

DETAIL - 6/EI

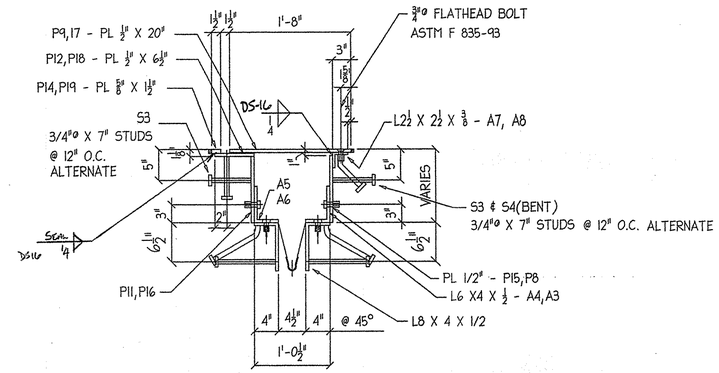

SECTION - 11/EI

NOTE: - TOP PLATE SURFACE SHALL BE "SLIP-NOT" OR APPROVED EQUAL.

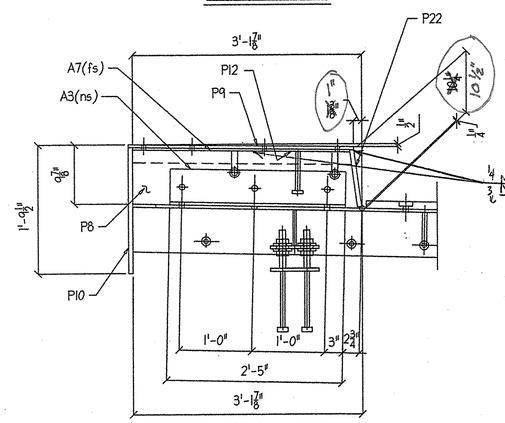

SECTION - 7/EI

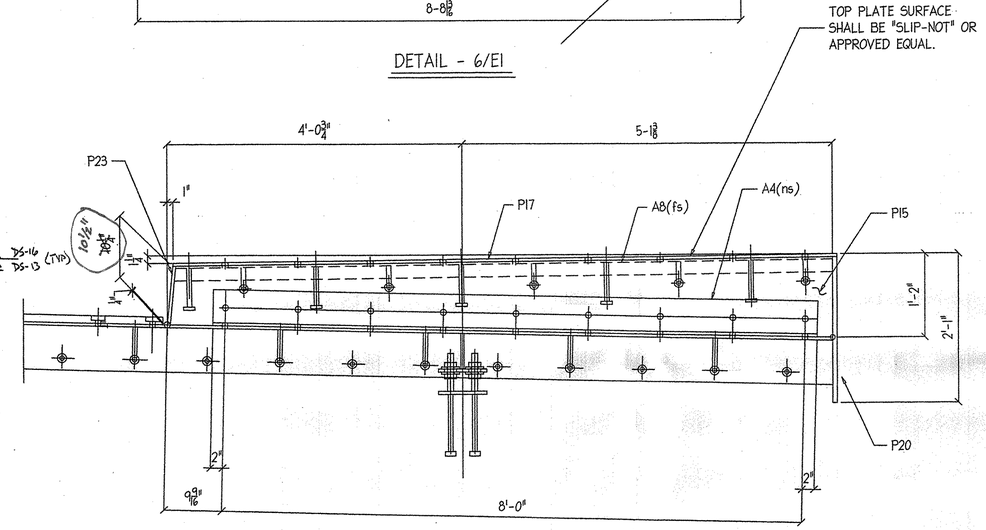

SECTION - 8/EI

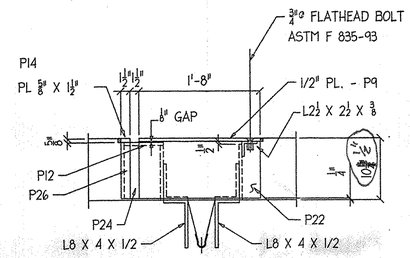

SECTION - 12/EI

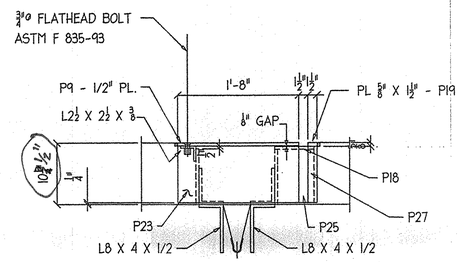

SECTION - 13/EI

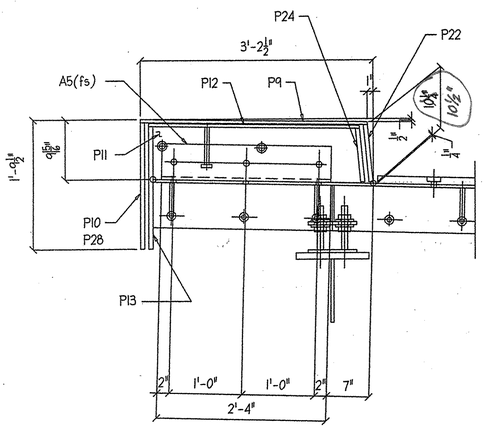

SECTION - 9/EI

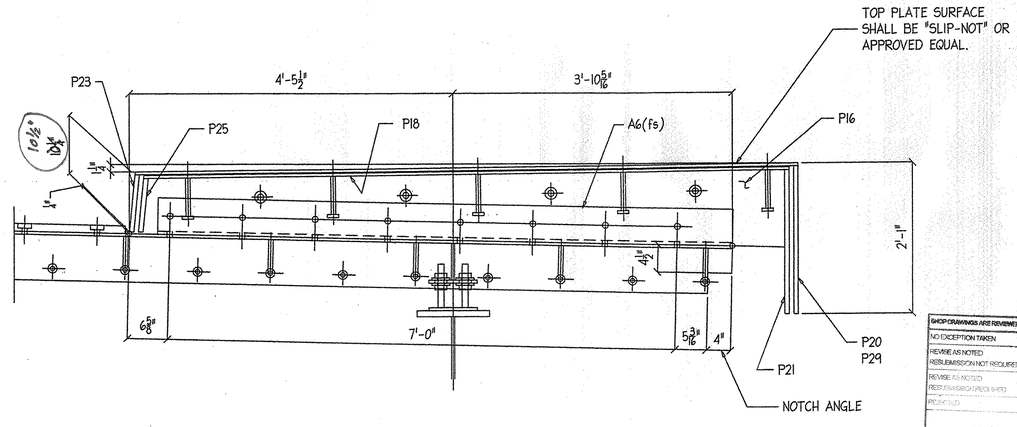

SECTION - 10/EI

NOTES:

1.) PREFORMED FABRIC MATERIAL SHALL BE CONTINUOUS AND SHALL CONFORM TO SUBSECTION 707.07.

2.) BUTYL RUBBER TAPE SHALL CONFORM TO AASHTO SPEC. M-198, TYPE II.

3.) ALL STEEL COMPONENTS SHALL BE AASHTO M270, GRADE 36, GALVANIZED OR METALIZED AS PER SUBSECTION 506.15(a) or (b) UNLESS NOTED OTHERWISE, EXCEPT FOR THREADED RODS AND NUTS TO BE ASTM A307, GRADE C. THE NUTS FOR THE THREADED RODS SHALL BE ASTM A563.

4.) THE L8 X 4 X 1/2 ANGLES SHALL BE FURNISHED AS ONE CONTINUOUS PIECE. THE 1 1/4" X 5 1/2" BARS EACH SIDE OF THE JOINT SHALL BE PROVIDED IN TWO EQUAL LENGTHS.

5.) A DRIP BEAD OF 1/4" X 7" STRIP OF PREFORMED MATERIAL SHALL BE CEMENTED TO THE BOTTOM OF THE FABRIC TROUGH USING AN ADHESIVE APPROVED BY THE MANUFACTURER. THE DRIP BEAD SHALL BE APPLIED 1" FROM THE DOWNSPOUT END OF THE TROUGH.

~~6.) THE EXPANSION JOINT SHALL BE SHOP ASSEMBLED AND SHIPPED AS ONE UNIT.~~

6.) THE EXPANSION JOINT SHALL BE SHOP ASSEMBLED AD SHIPPED AS ONE UNIT. GALVANIZED IN ACCORDANCE WITH ASTM A153 (AASHTO M232).

7.) Seal weld all connections when possible prior to galvanizing.

SHOP DRAWINGS ARE REVIEWED UNLESS NOTED OTHERWISE

NO EXCEPTION TAKEN
REVISE AS NOTED
RESUBMISSION NOT REQUIRED ✓
REVISE AS NOTED
RESUBMISSION REQUIRED
REJECTED

Stantec

DATE January 7th, 2007

SIGNATURE Scott Burlend

REVIEW BY STANTEC IS FOR THE SOLE PURPOSE OF ASCERTAINING GENERAL CONFORMITY WITH DESIGN. CONTRACTOR IS RESPONSIBLE FOR DIMENSIONS, FABRICATION AND CONSTRUCTION METHODS, COORDINATION OF SUB-TRADES, DETAIL DESIGN OF COMPONENTS, AND ERRORS OR OMISSIONS ON SHOP DRAWINGS.

REV. NO.	DATE	DESCRIPTION