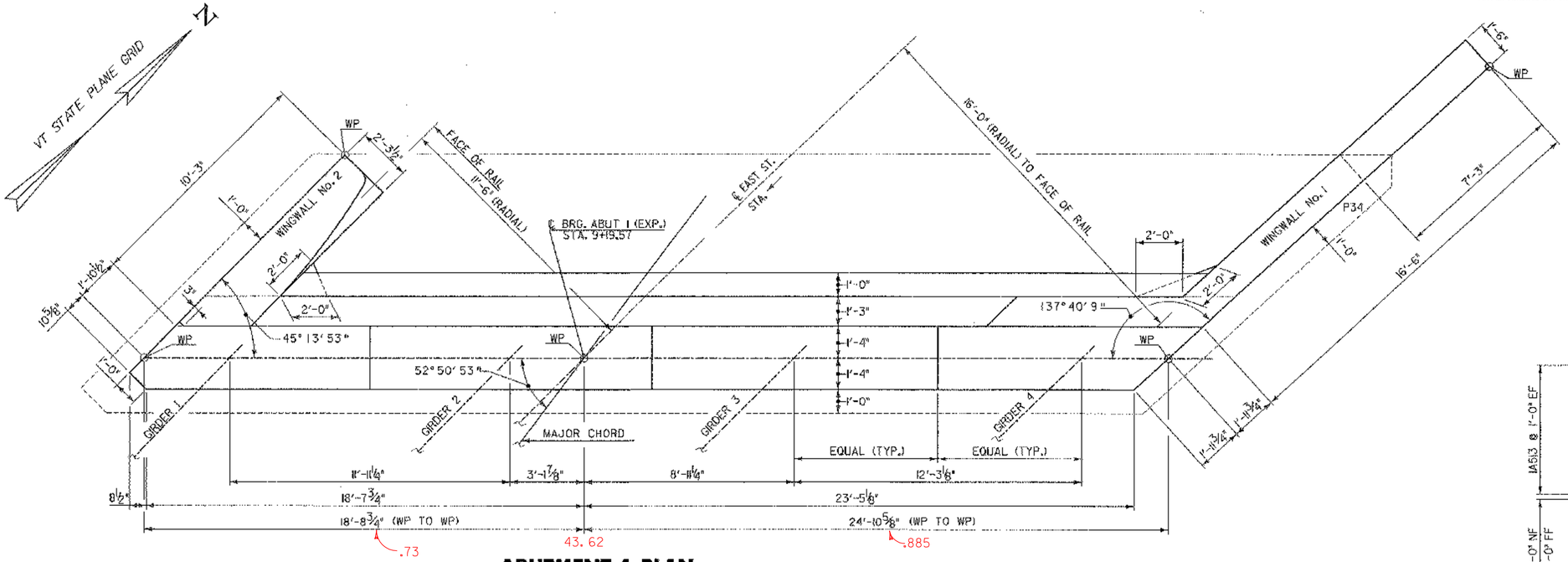

ABUTMENT 1 PLAN

SCALE ⅜" = 1'-0

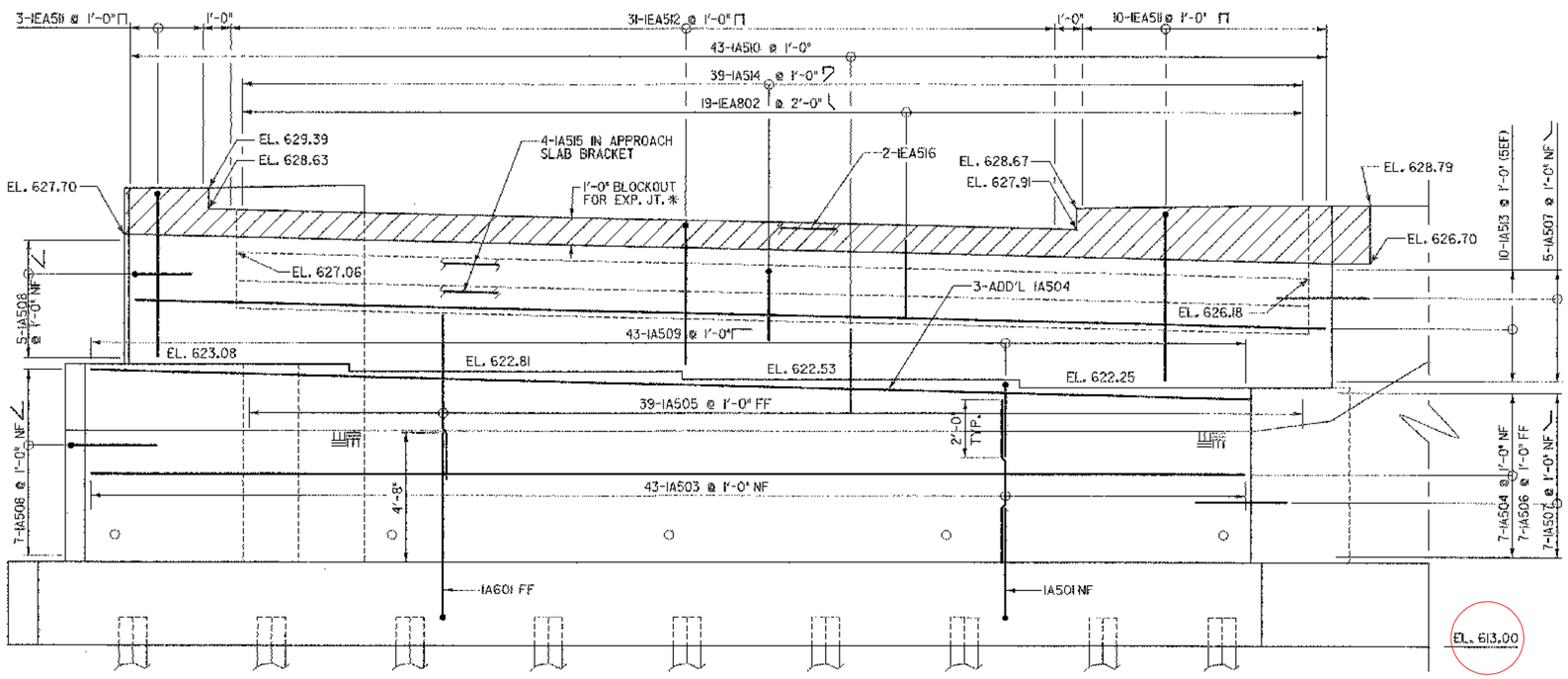

ABUTMENT 1 ELEVATION

SCALE ⅜" = 1'-0

* CONCRETE FOR EXPANSION JOINT BLOCKOUT TO BE HIGH PERFORMANCE CLASS A.

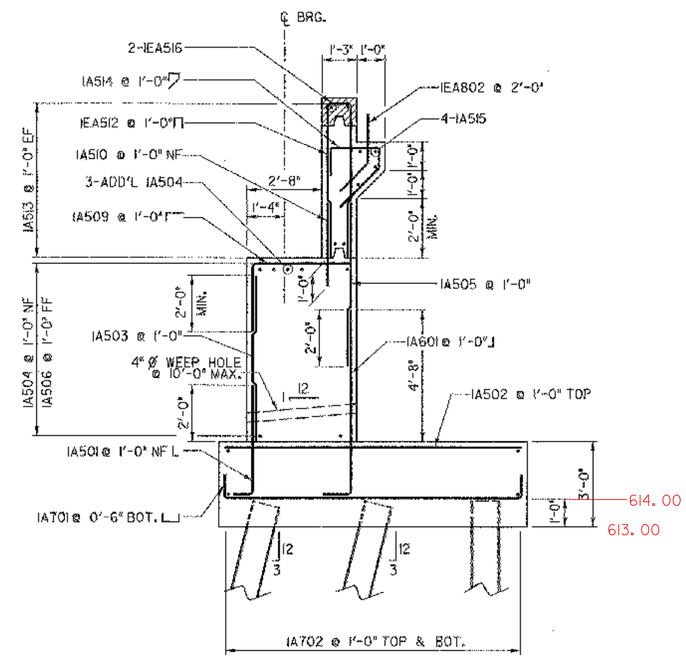

ABUTMENT NO. 1 TYPICAL SECTION

SCALE ⅜" = 1'-0

NOTE:

NF = NEAR FACE
FF = FAR FACE
EF = EACH FACE
▲ = CUT TO FIT IN FIELD

DH Dufresne-Henry

STATE OF VERMONT
AGENCY OF TRANSPORTATION

Town Of HUNTINGTON	Bridge No. 42
Highway No. T.H. 4	Log Sta. / Surv. Sta.
EAST STREET (T.H. #4) OVER HUNTINGTON RIVER	
ABUTMENT NO. 1 PLAN AND ELEVATION	
Designed By T. KNIGHT	Drawn By T. KNIGHT
Checked By S. BURBANK Date 06/05	Bridge Design Supervisor M. CHENETTE Date 09/05
PROJECT HUNTINGTON	PROJECT NO. BRO 1445 (29)
DH Dgn.: ...\Cadd\Trans\z01302abutl.dgn	Plot Date: 1/12/2006
Bridge Sheet No.	Sheet 42 of 63