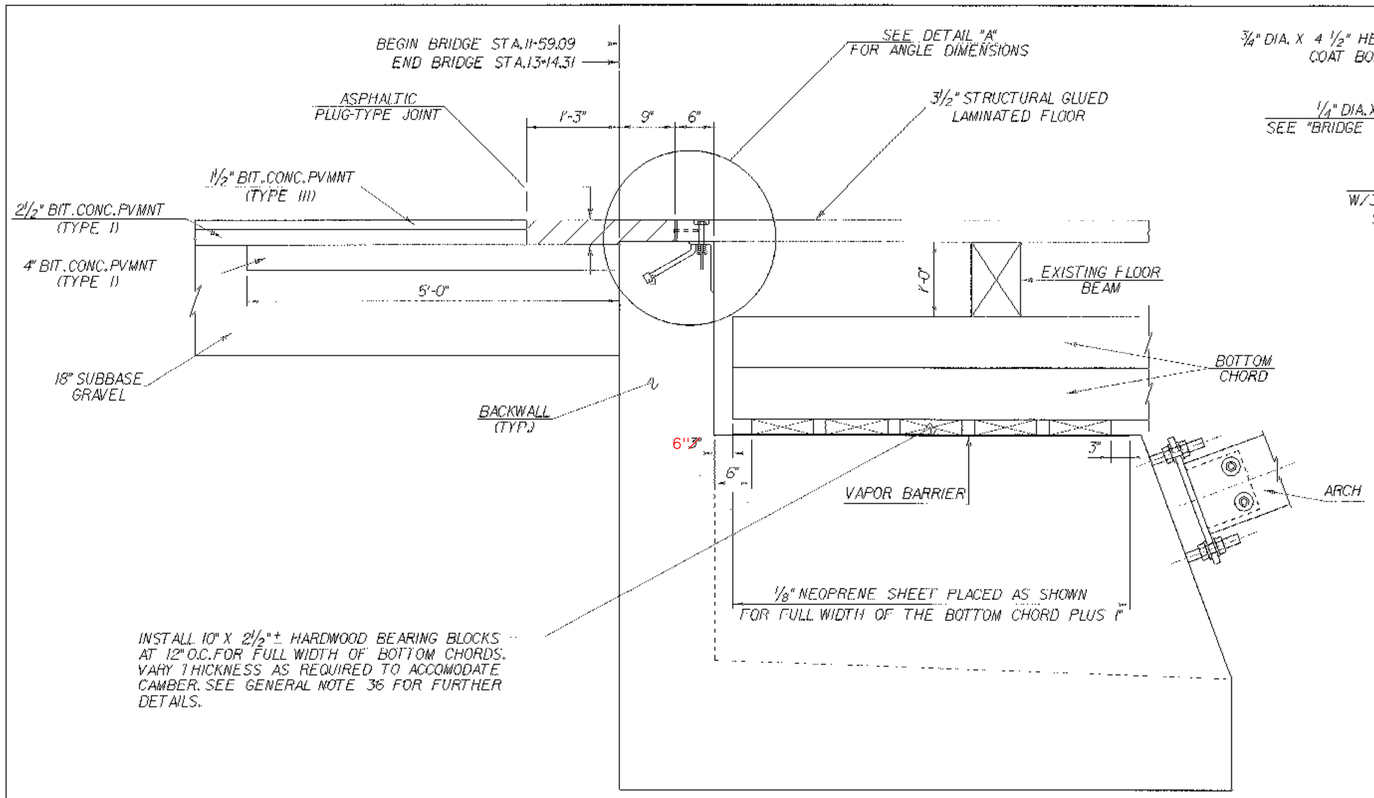

BRIDGE END TYPICAL SECTION

SCALE 1" = 1'-0

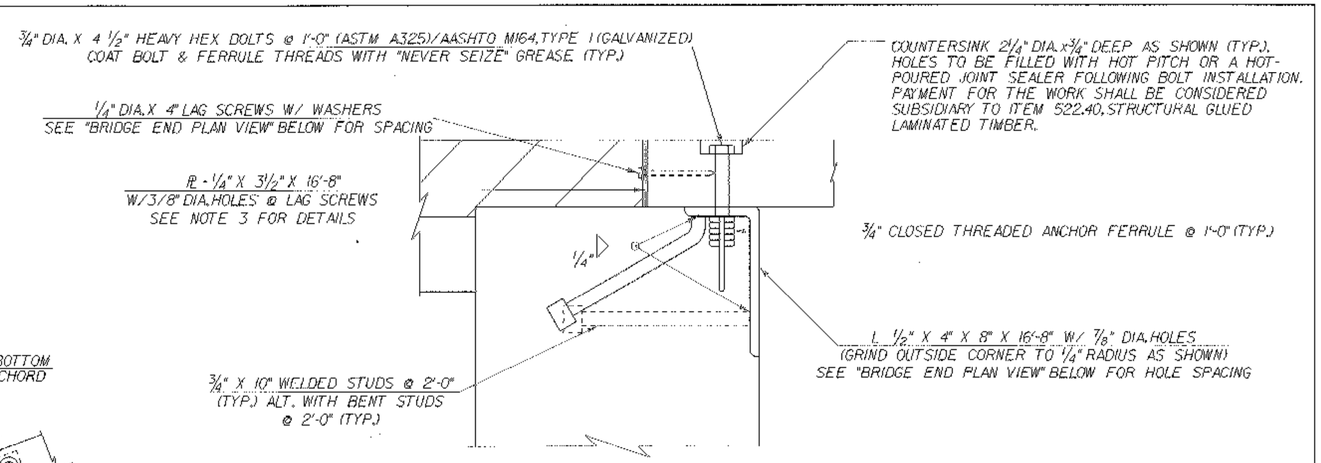

DETAIL "A"

SCALE 3" = 1'-0

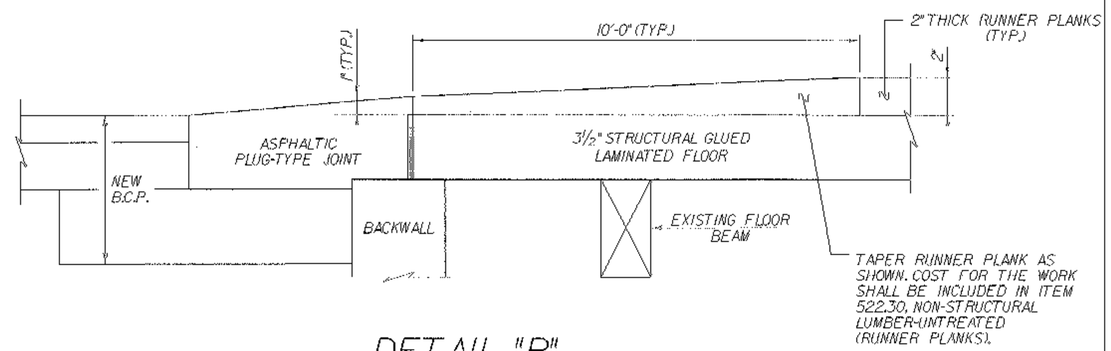

DETAIL "B"

NOT TO SCALE

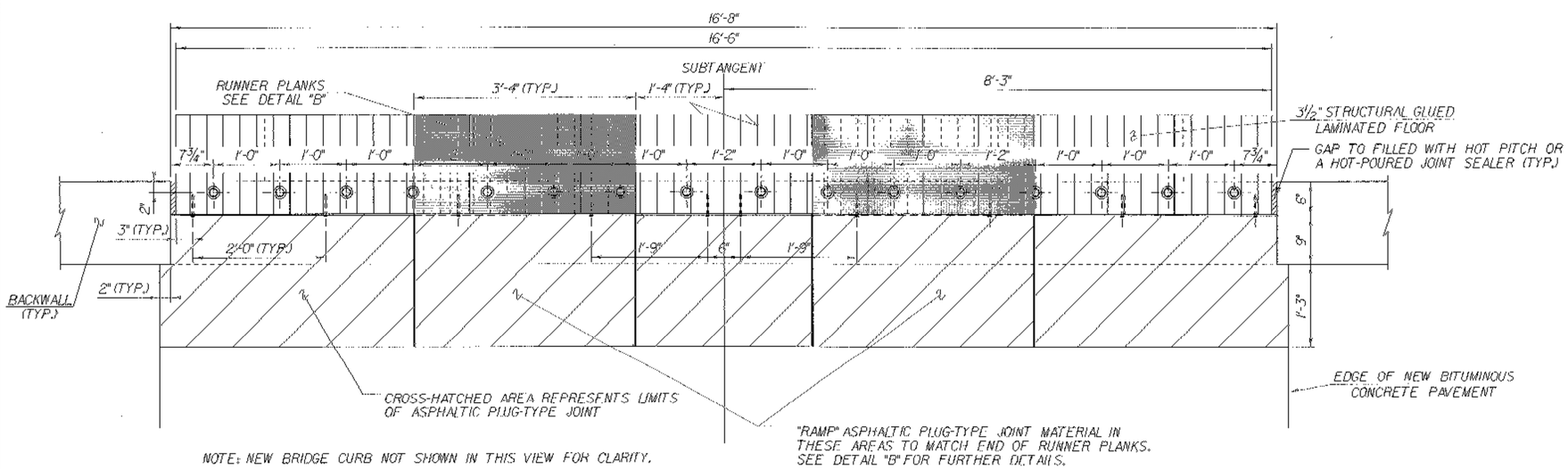

NOTE: NEW BRIDGE CURB NOT SHOWN IN THIS VIEW FOR CLARITY.

BRIDGE END PLAN VIEW

NOTES

1. UNLESS OTHERWISE SPECIFIED, ALL STEEL COMPONENTS SHALL BE AASHTO M270/M270, GRADE 36 OR BETTER, AND GALVANIZED OR METALIZED AS PER SUBSECTION 506.15 (a) OR (b).
2. THE ½" X 4" X 8" ANGLES SHALL BE FURNISHED AS ONE CONTINUOUS PIECE. THE ANGLES, STUDS, AND ANCHOR FERRULES SHALL BE SHOP ASSEMBLED AND SHIPPED AS ONE UNIT. ALL PREPARATION, WORK, AND MATERIALS NECESSARY TO COMPLETE THE INSTALLATION OF THIS UNIT SHALL BE PAID AS ITEM 516.10, BRIDGE EXPANSION JOINT (ANGLE UNIT).
3. ALL PREPARATION, WORK, AND MATERIALS NECESSARY TO COMPLETE THE INSTALLATION OF THE PLATE SHALL BE CONSIDERED SUBSIDIARY TO ITEM 522.40, STRUCTURAL GLUED LAMINATED TIMBER.
4. ITEM 516.10, BRIDGE EXPANSION JOINT (ASPHALTIC PLUG-TYPE JOINT) SHALL INCLUDE ALL NECESSARY PREPARATION, WORK, AND MATERIALS ASSOCIATED WITH THE INSTALLATION OF THE ASPHALTIC PLUG-TYPE JOINT AS DETAILED ON THIS SHEET.

BRIDGE END DETAIL SHEET

PROJECT NAME: CAMBRIDGE	
PROJECT NUMBER: BHO 1448(31) C/2	
FILE NAME: /00J244/str/sJ244abut2.dgn	PLOT DATE: 07-AUG-2002
PROJECT LEADER: D. HOYNE	DRAWN BY: M. FOWLER
DESIGNED BY: M. FOWLER	CHECKED BY: M. GAGULIC
sJ244ebd.1	SHEET 28 OF 62