SEEDING FORMULA
RURAL AREAS

% WT.	LBS./A.	NAME	PUR %	GERM %
37.5	22.5	CREEPING RED FESCUE	98	85
37.5	22.5	TALL FESCUE	95	90
5.0	3.0	RED TOP	95	90
15.0	9.0	BIRDSFOOT TREEFOIL	98	85
5.0	3.0	ANNUAL RYEGRASS	95	85
100.0	60.0			

GENERAL NOTES

SEED MIXTURE: SHALL NOT HAVE A WEED CONTENT EXCEEDING 0.40% BY WEIGHT AND SHALL BE FREE OF ALL NOXIOUS SEED.

SEED: TO BE APPLIED PER SEEDING FORMULAS OR AS DIRECTED BY THE ENGINEER.

FERTILIZER: FORMULA 10-20-10, TO BE USED WITH SEED, APPLIED AT THE RATE OF 500 LBS./ACRE. (HYDRO SEEDERS MAY USE 19-19-19 FORMULA).

AGRICULTURAL LIMESTONE: TO BE APPLIED AT THE RATE OF 2 TONS/ACRE, OR AS DIRECTED BY THE ENGINEER.

HAY MULCH: TO BE PLACED ON EARTH SLOPES AT THE RATE OF 2 TONS/ACRE, OR AS DIRECTED BY THE ENGINEER.

TOPSOIL: TO BE USED WITH SEED AS INDICATED ON THE PLANS, OR AS DIRECTED BY THE ENGINEER.

TACK COAT: EMULSIFIED ASPHALT IS TO BE APPLIED AT THE RATE OF 0.015 GAL/SY BETWEEN SUCCESSIVE COURSES OF PAVEMENT AS DIRECTED BY THE ENGINEER.

TYPICAL SECTIONS

1.5" BITUMINOUS CONCRETE PAVEMENT (TYPE III)
2.5" BITUMINOUS CONCRETE PAVEMENT (TYPE I)
18" SUBBASE OF GRAVEL
SHOULDERS: 4" AGGREGATE SHOULDER MATERIAL

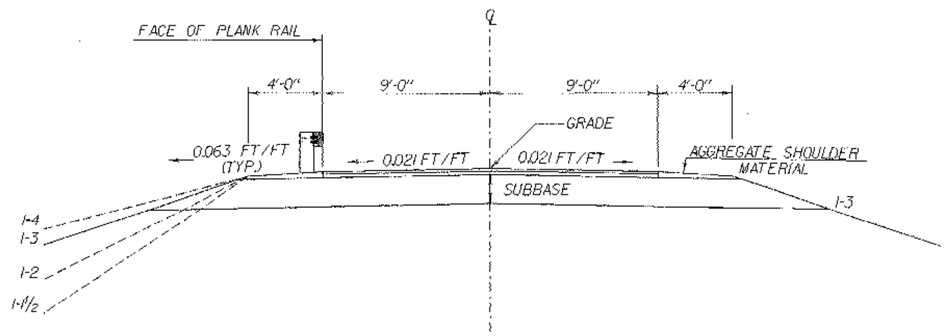

NORMAL SECTION
N.T.S.

MATERIAL ITEM	TOLERANCE
PAVEMENT	± ¼" TOTAL THICKNESS
SUBBASE	± 1"
GRANULAR BACKFILL FOR STRUCT.	± 1"

NOTE: PAYMENT FOR ALL FILL MATERIAL SHALL BE UNDER ITEM 204.30, GRANULAR BACKFILL FOR STRUCTURES.

BRIDGE REHABILITATION GENERAL SCOPE OF WORK

(NOTE: LIST DOES NOT SUGGEST SEQUENCE OF WORK)

1) CLOSE ROAD TO ALL TRAFFIC
2) REMOVE PEDESTRIAN APPROACH BRIDGES
3) REMOVE EXISTING DECK
4) REMOVE EXISTING SIDING
5) REMOVE EXISTING METAL ROOF
6) UNLOAD BRIDGE WITH SHORING OR MOVE TO STAGING AREA
7) RE-ALIGN TRUSSES TO OBTAIN 1/2 - 18 INCHES RESIDUAL CAMBER
8) REPLACE ONLY DAMAGED OR DETERIORATED MEMBERS AS INDICATED ON THE PLANS OR AS DIRECTED BY THE ENGINEER
9) REPLACE ALL CONNECTION HARDWARE (EXCEPT THAT WERE INSTALLED IN CONTRACT ONE WHICH ARE TO BE REINSTALLED)
10) REPLACE DAMAGED OR DETERIORATED SHEAR BLOCKS IN SCARF JOINTS OF BOTTOM CHORD
11) TIGHTEN ALL JOINERY AND CONNECTIONS TO A ZERO GAP TOLERANCE
12) RECONSTRUCT SUBSTRUCTURES AS DETAILED ON PLANS
13) REMOVE LATTICE BRACING INSTALLED IN PHASE ONE AFTER BRIDGE IS IN POSITION ON NEW SUBSTRUCTURES
14) INSTALL NEW SIDING
15) INSTALL LATERAL BRACING IN FLOOR SYSTEM.
16) INSTALL NEW GLULAM DECK AND RUNNER PLANKS
17) INSTALL NEW STANDING SEAM ROOF
18) RECONSTRUCT APPROACHES AND ALL ASSOCIATED WORK
19) APPLY FUNGASIDE AND FIRED RETARDENT TO ALL TIMBER ELEMENTS

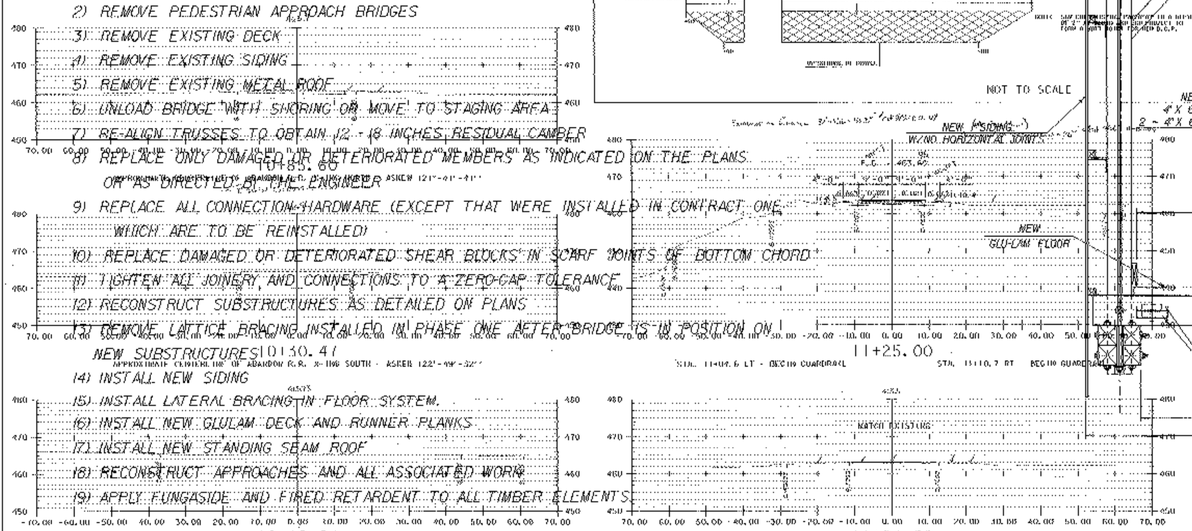

MATERIAL TRANSITION DIAGRAM

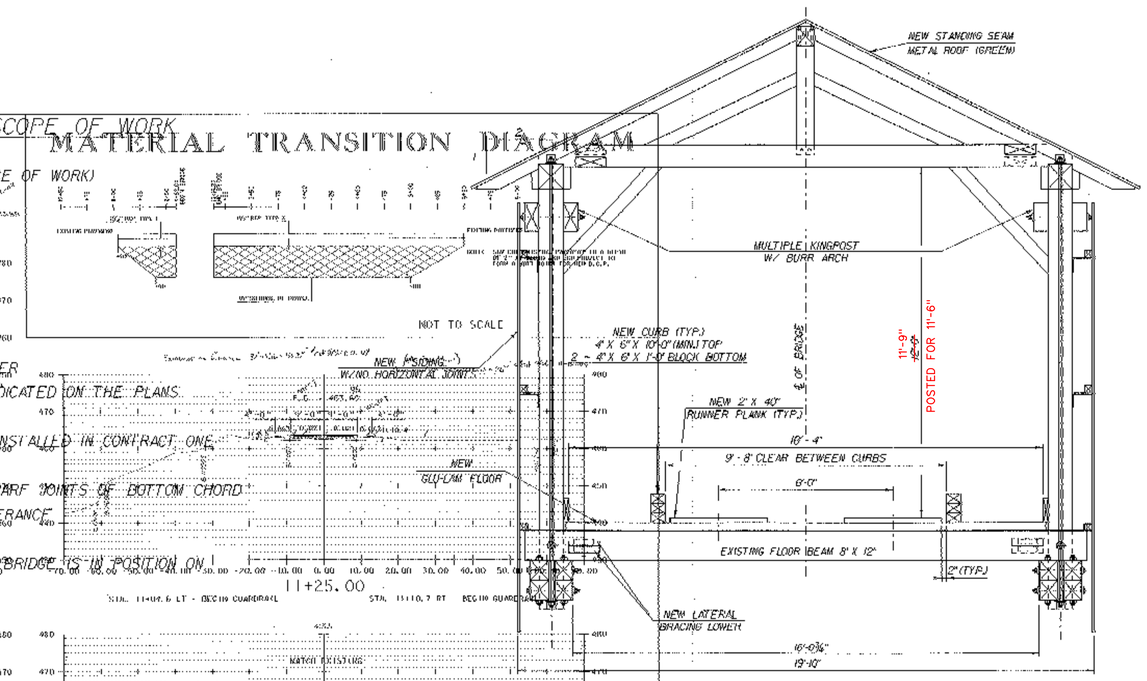

REHABILITATED
TYPICAL CROSS SECTION
N.T.S.
(CUT @ MIDSPAN)

NOTE:
HARDWARE INSTALLED ON BOTTOM CHORD FROM CONTRACT 1 (NOT SHOWN FOR CLARITY.

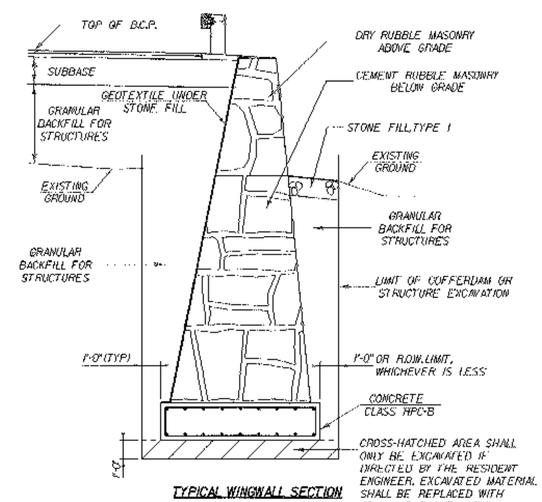

TYPICAL WINGWALL SECTION
N.T.S.

MAINLINE CROSS SECTIONS SHEET 1

TYPICAL SECTIONS SHEET

PROJECT NAME: CAMBRIDGE	
PROJECT NUMBER: BHO 1448(31) C/2	
FILE NAME: /00j244/str/sj244typ2.dgn	PLOT DATE: 07-AUG-2002
PROJECT LEADER: D. HOYNE	DRAWN BY: R. PELLETT
DESIGNED BY: M. GAGULIC	CHECKED BY: M. FOWLER
sj244typ2.1	SHEET 5 OF 62

STONE FILL,TYPE I

38 STA 11+41 - 11+65 LT 58
38 STA 11+47 - 11+67 RT 61
~~STA 13+13 - 13+22 LT~~
~~STA 13+10 - 14+25 RT~~

STONE FILL,TYPE II

14 STA 13+23 - 13+45 LT 39
11 STA 13+25 - 14+25 RT 10

PLANK RAIL (MODIFIED)

06 STA 11+04.59 - 11+56.77 LT 58
12 STA 11+10.73 - 11+58.59 RT 59
15 STA 13+18.98 - 14+75.71 LT 71
15 STA 13+20.08 - 14+74.14 RT 71

REMOVAL AND DISPOSAL OF GUARD RAIL

STA 11+40 - 11+54 RT
STA 13+21 - 14+68 LT
STA 13+24 - 14+70 RT

GRUBBING MATERIAL (6")

11 STA 13+23 - 13+45 LT 24
11 STA 13+25 - 14+25 RT 10

EROSION MATTING

STA 13+23 - 14+90 LT
14 STA 13+25 - 14+90 RT 13+50
STA 10+80 - 11+59 LT
STA 10+80 - 11+59 RT

MAGNETIC

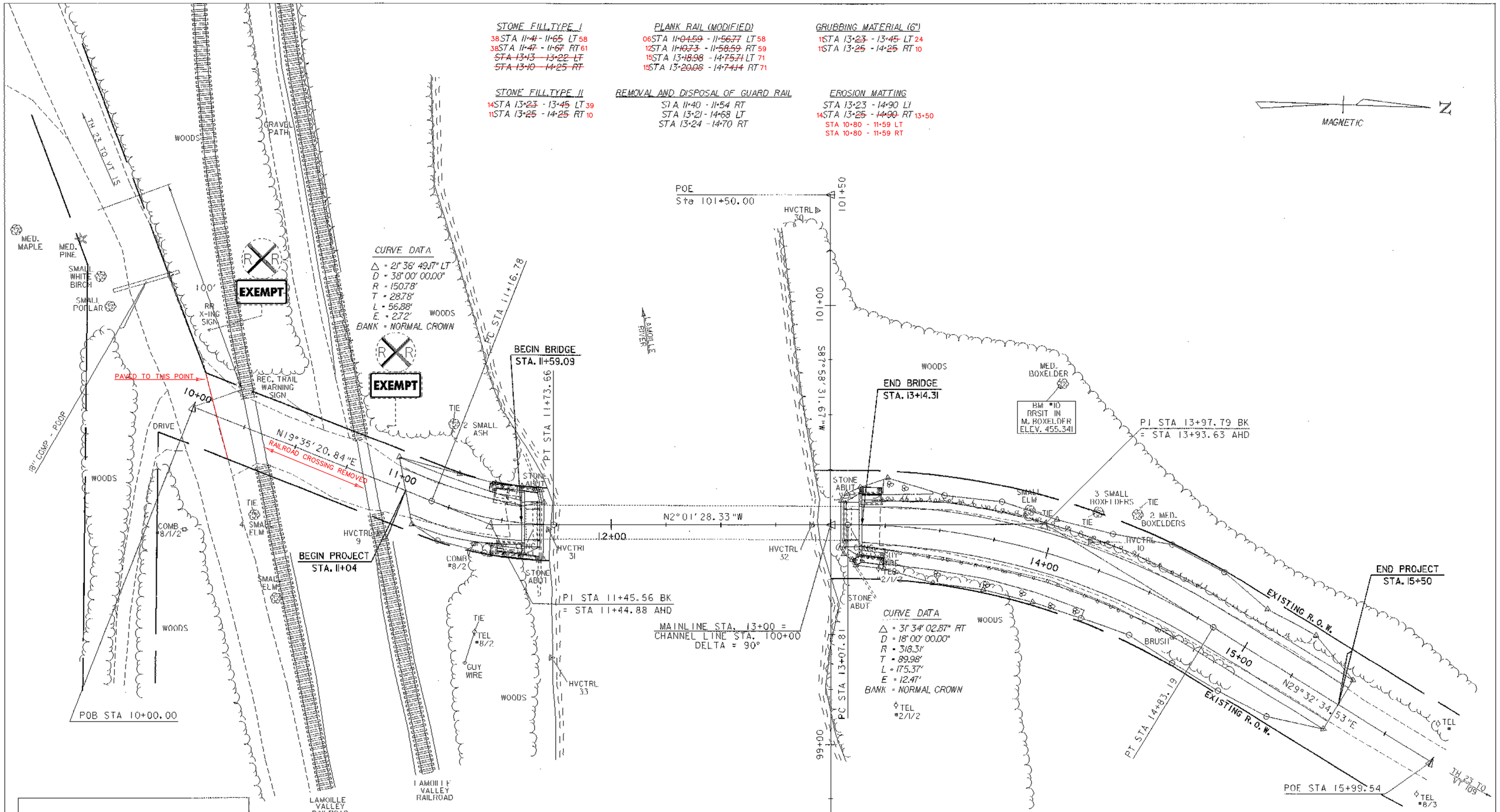

LINES SHOWN ON THIS PLAN AS EXISTING PROPERTY LINES P/L ARE BELIEVED TO BE ACCURATE BUT SHOULD NOT BE RELIED UPON FOR PURPOSES UNRELATED TO THE TOWN OF CAMBRIDGE'S ACQUISITION OF LAND AND RIGHTS FOR THIS PROJECT.

LAYOUT SHEET

PROJECT NAME: CAMBRIDGE	
PROJECT NUMBER: BHO 1448(31) C/2	
FILE NAME: /00j244/str/sj244bdr.dgn	PLOT DATE: 07-AUG-2002
PROJECT LEADER: D. HOYNE	DRAWN BY: R. PELLETT
DESIGNED BY: M. FOWLER	CHECKED BY: M. GAGULIC
sj244lal.l	SHEET 7 OF 62

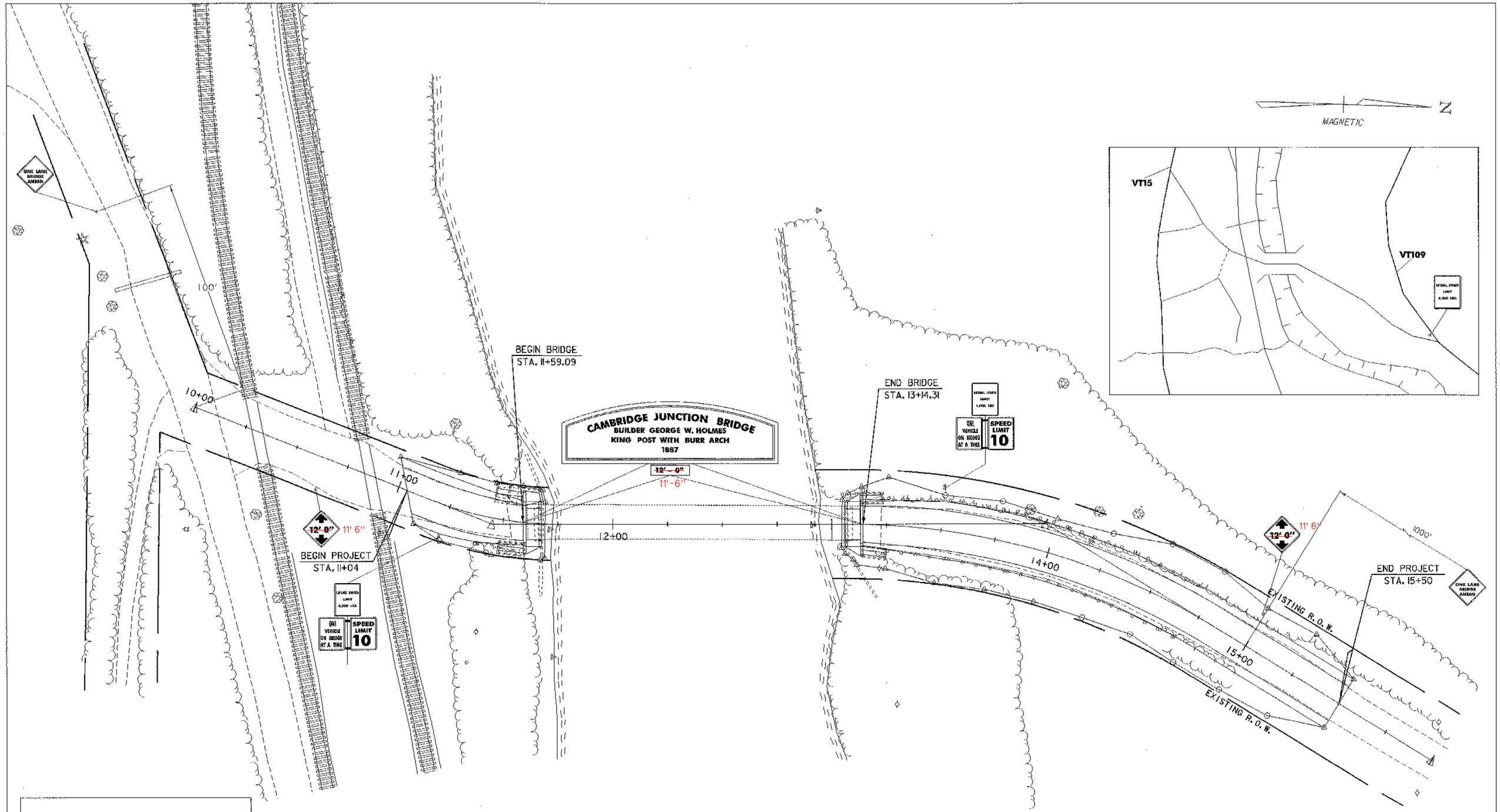

LINES SHOWN ON THIS PLAN AS EXISTING PROPERTY LINES P/L ARE BELIEVED TO BE ACCURATE BUT SHOULD NOT BE RELIED UPON FOR PURPOSES UNRELATED TO THE TOWN OF CAMBRIDGE'S ACQUISITION OF LAND AND RIGHTS FOR THIS PROJECT.

SCALE 1" = 20'-0

20 0 20

SIGN LAYOUT SHEET

PROJECT NAME: CAMBRIDGE

PROJECT NUMBER: BHO 1448(31) C/2

FILE NAME: /00J244/str/sj244bdr.dgn
PROJECT LEADER: D. HOYNE
DESIGNED BY: M. FOWLER
sj244traf.i

PLOT DATE: 07-AUG-2002
DRAWN BY: R. PELLETT
CHECKED BY: M. GAGULIC
SHEET 11 OF 62

STATE OF VERMONT
AGENCY OF TRANSPORTATION

TRAFFIC SIGN SUMMARY SHEET

MILEMARKER, STATION, OR SIGN NUMBER	SIGN LEGEND	SIGN DIMENSIONS EA	WIDTH (in)	HEIGHT (in)	NEW & SALVAGED SIGNS "A"	"A" (MOD.)	SALV SIGN	SALV TIS	EXIST POST RETAIN	EXIST POST SALVAGE	NO. OF POSTS	FLANGED CHANNEL lb/ft 1.12	2.0	3.0	SQUARE STEEL (in) lb/ft 1.75	2.0	2.5	ANCHOR	SLEEVE	TUBULAR ALUMINUM Ø (in) lb/ft 3.0	4.0	4.0 MOD.	TUBULAR STEEL Ø (in) FOUND-ATION	lb/ft 3.0	3.5	4.0	5.0	W-SHAPE STEEL FTG. SIZE 24"	30"	WEIGHT	POST SIZE	SIGN FRAME REQUIRED	REMARKS	SIGN DETAIL DETAIL ON SHEET NUMBER	STD. SHEET NUMBER
												OPTION ITEMS																							
APPROX. STA. 9+00	ONE LANE BRIDGE AHEAD	1	30	30	6.25						1			12 X																			W5-3		
STA. 10+65 RT	12'-0" 11'-6"	1	30	30	6.25						1			12 X																			W12-2		E-155
STA. 11+25 RT	LEGAL LOAD LIMIT 6,000 LBS	1	24	30	5						2			14 X 12																	X	VR-017, SEE STD E-123 FOR SIGN FRAME		E-141
	ONE VEHICLE ON BRIDGE AT A TIME	1	24	30	5																											VR-352A	13	
	SPEED LIMIT 10	1	24	30	5																											R2-1		E-142
STA. 11+59.09	CAMBRIDGE JUNCTION BRIDGE BUILDER GEORGE W. HOLMES KING POST WITH BURR ARCH 1887	1	72	24.25		12.13																										SPECIES: WHITE OAK GRADE: NO.1 OR BETTER F_{bu} = 875 PSI F_{tu} = 110 PSI F_c = 900 PSI E = 1000 000 PSI EXTERIOR FINISH: CLEAR STAIN LETTERS: BLACK STAIN RECESSED: 1/2"	13	
	12' – 0" 11'-6"	1	33	9		2.06																										SPECIES: WHITE OAK GRADE: NO.1 OR BETTER F_{bu} = 875 PSI F_{tu} = 110 PSI F_c = 900 PSI E = 1000 000 PSI EXTERIOR FINISH: CLEAR STAIN LETTERS: BLACK STAIN RECESSED: 1/2"	13	
STA. 13+14.31	CAMBRIDGE JUNCTION BRIDGE BUILDER GEORGE W. HOLMES KING POST WITH BURR ARCH 1887	1	72	24.25		12.13																										SPECIES: WHITE OAK GRADE: NO.1 OR BETTER F_{bu} = 875 PSI F_{tu} = 110 PSI F_c = 900 PSI E = 1000 000 PSI EXTERIOR FINISH: CLEAR STAIN LETTERS: BLACK STAIN RECESSED: 1/2"	13	
	12' – 0"	1	33	9		2.06																										SPECIES: WHITE OAK GRADE: NO.1 OR BETTER F_{bu} = 875 PSI F_{tu} = 110 PSI F_c = 900 PSI E = 1000 000 PSI EXTERIOR FINISH: CLEAR STAIN LETTERS: BLACK STAIN RECESSED: 1/2"	13	
STA. 13+50 LT	LEGAL LOAD LIMIT 6,000 LBS	1	24	30	5						2			14 X 12																	X	VR-017, SEE STD E-123 FOR SIGN FRAME		E-141
	ONE VEHICLE ON BRIDGE AT A TIME	1	24	30	5																											VR-352A	13	
	SPEED LIMIT 10	1	24	30	5																											R2-1		E-142
STA. 15+00 LT	12'-0" 11'-6"	1	30	30	6.25						1			12 X																		W12-2		E-155
STA. 25+00 LT	ONE LANE BRIDGE AHEAD	1	30	30	6.25						1			12 X																		W5-3		
INTER. TH 23 & VT RTE 109	LEGAL LOAD LIMIT 6,000 LBS	1	24 ~~30~~	30	5.0 ~~6.25~~						1			12 X																		VR-017		E-141

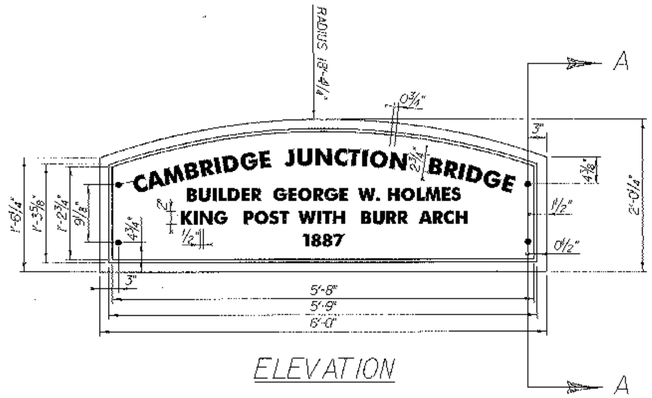

ELEVATION

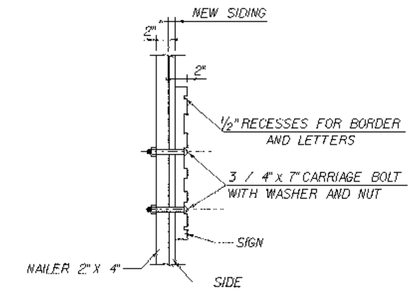

SECTION A-A

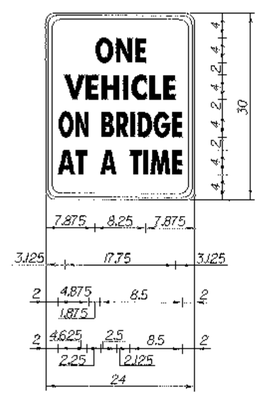

VR352A

1.500" RADIUS, 0.625" BORDER, 0.375" INDENT, BLACK ON WHITE;
"ONE" C; "VEHICLE" C; "ONE BRIDGE" C SPECIFIED LENGTH;
"AT A TIME" C SPECIFIED LENGTH;

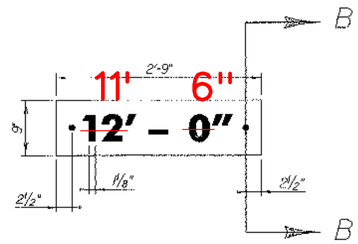

ELEVATION

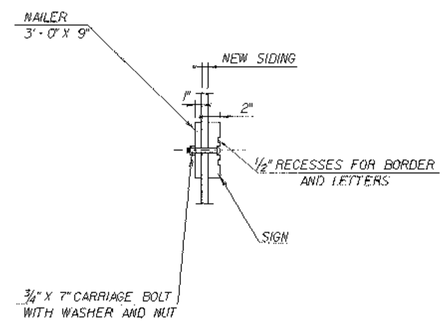

SECTION B-B

TRAFFIC SIGN DETAIL SHEET

PROJECT NAME: CAMBRIDGE
PROJECT NUMBER: BHO 1448(31) C/2

FILE NAME: /00J244/atr/sj244sign.dgn
PROJECT LEADER: D. HOYNE
DESIGNED BY: M. GAGULIC
sj244sdt.1

PLOT DATE: 07-AUG-2002
DRAWN BY: R. PELLETT
CHECKED BY: M. FOWLER
SHEET 13 OF 62

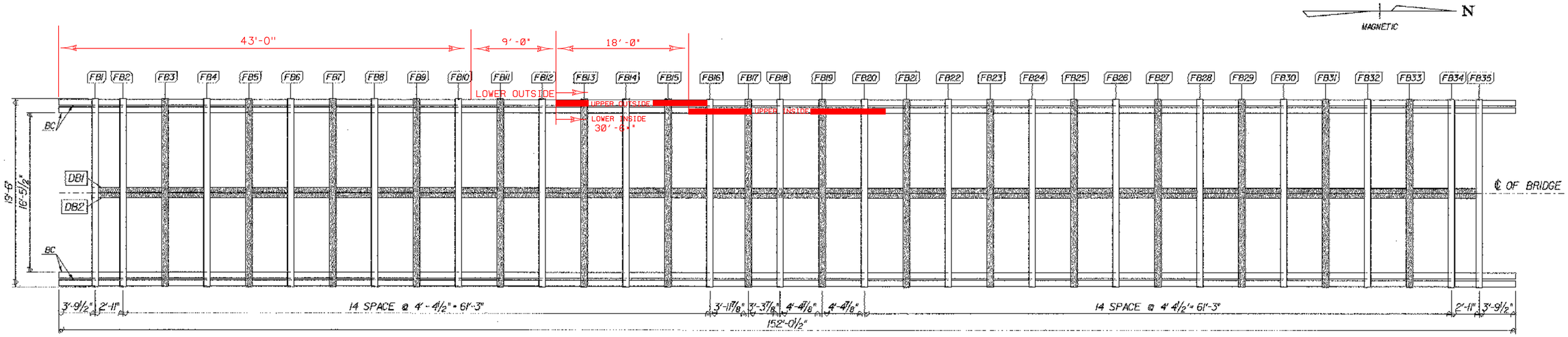

EXISTING FLOOR FRAMING PLAN

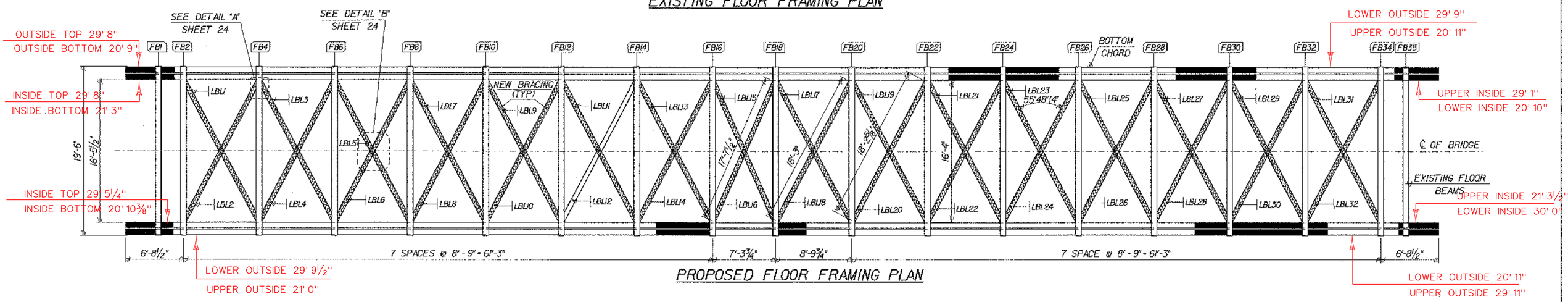

PROPOSED FLOOR FRAMING PLAN

MEMBER IDENTIFICATION TABLE						
MEMBER	SYMBOL	LENGTH	WIDTH	THICKNESS	TOTAL NO.	REPLACE
BOTTOM CHORD	BC	152'-0"	7 1/2"	~~8 1/4"~~ 8 1/2"	8	*PORTION
FLOOR BEAM	FB	19'-6"	8"	1'-0"	35	1,6,16,18 34,35
LATERAL BRACING LOWER	LBL	18'-3"	3"	6"	32	INSTALL ALL NEW
DISTRIBUTION BEAM	DB	145'-1 1/2"	6"	11"	2	

RETAIN	FB1, FB2, FB4, FB6, FB8, FB10, FB12, FB14, FB16, FB18, FB20, FB22, FB24, FB26, FB28, FB30, FB32, FB34, FB35
REMOVE	FB3, FB5, FB7, FB9, FB11, FB13, FB15, FB17, FB19, FB21, FB23, FB25, FB27, FB29, FB31, FB33

REMOVE	DB1, DB2

*AREAS OF CONCERN HAVE BEEN DEPICTED IN THE PROPOSED FLOOR FRAMING PLAN BUT PRECISE SEGEMENTS HAVE NOT BEEN IDENTIFIED FOR REPLACEMENT. IF THESE AREAS ARE FOUND TO REQUIRE REPLACEMENT THEN THE FULL SEGMENT BETWEEN SCARF JOINTS SHALL BE REPLACED.

LEGEND:
- REMOVE SHADED MEMBERS
- NEW MEMBERS
- AREAS OF CONCERN

SCALE 3/16" = 1'-0
0 2 4 6 8

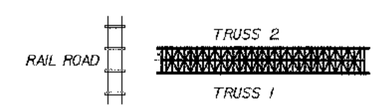

FLOOR PLAN SHEET

PROJECT NAME: CAMBRIDGE
PROJECT NUMBER: BHO 1448(31) C/2

FILE NAME: /00j244/str/sj244bdg.dgn
PROJECT LEADER: DAVID HOYNE
DESIGNED BY: M. GAGULIC
sj244fp.i

PLOT DATE: 06-MAR-2003
DRAWN BY: R. PELLETT
CHECKED BY: M. FOWLER
SHEET 15 OF 62

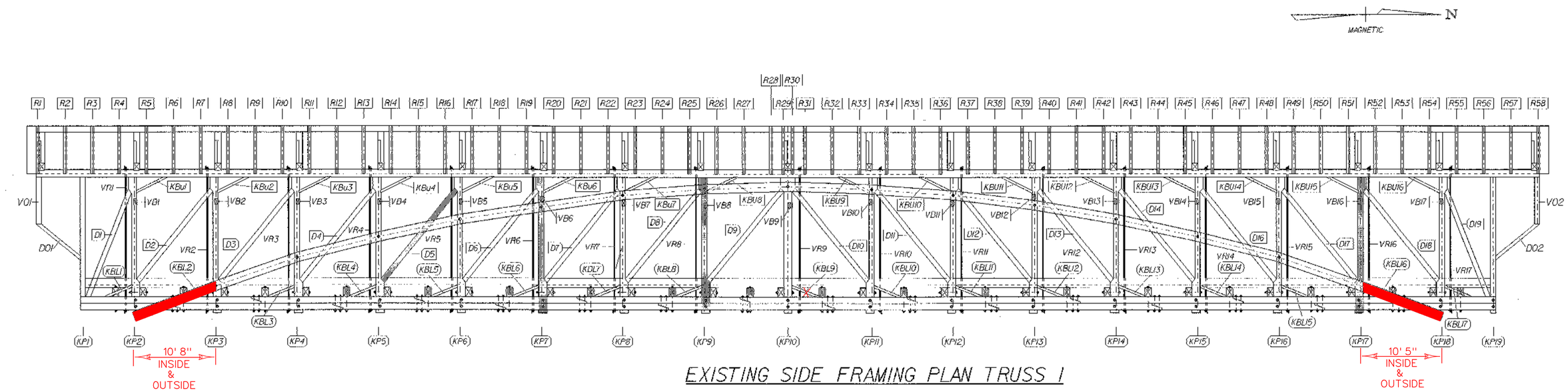

EXISTING SIDE FRAMING PLAN TRUSS 1

TRUSS 2 SIMILAR - SEE TABLE
FOR MEMBERS TO BE REPLACED

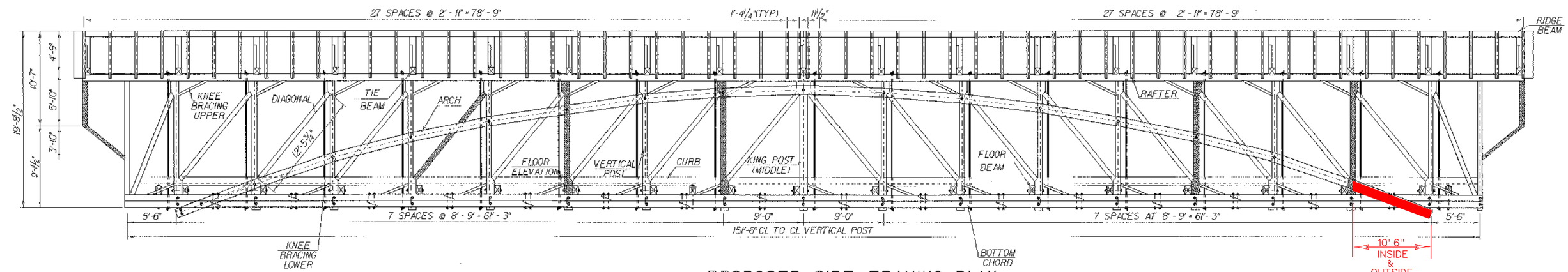

PROPOSED SIDE FRAMING PLAN

MEMBER IDENTIFICATION TABLE						REPLACE	
MEMBER	SYMBOL	LENGTH	WIDTH	THICKNESS	TOTAL NO.	TRUSS 1	TRUSS 2
DIAGONAL	D	12' - 5¾"	10"	6"	38	D5 ~~6~~ D15, D18, D19	D3 D19
RAFTER	R	12' - 10"	3½"	5"	116		
KNEE BRACING UPPER	KBU	3' - 9⅝"	10"	3"	32	KBU 1,3,4,5,6,7,12,14,15,16	KBU 11,12,13,14,15,1
KNEE BRACING LOWER	KBL	3' - 0⅛"	10"	4"	34	KBL 1,2,3,4,5,6,7,8,10,11,12,~~13,14,~~15,16,17	KBL16,17,10,11,12,13,14,15,1,2,3,4,5,6,7,8
KING BRACING	VB	5' - 0⅜"	4"	5"	38	VB 1,2,4,6,7,8,10,14,15,16,17	2,4,8,9,10,11,6,7,15,16,17, VERT@V03-T-2
ARCH SEGMENT	AS					KP1,KP2,KP3,KP5,KP8,KP15,KP16	
KING POST	KP	15' - 3½"	10"	15½/~~8½~~"	38	KP7,~~KP9,~~KP17,KP18,KP19	KP9,~~KP15~~ KP17,KP18,KP19
VERTICAL OVERHANG	VO	5' - 0"	4"	4"	4	~~V01,V02~~	V03,V04
DIAGONAL OVERHANG	DO	6' - 0¾"	4"	4"	4	D01,D02	D03,D04
VERTICAL RODS	VR	15' - 7½"			34	REPLACE ALL RODS INSTALLED PRIOR TO CONTRACT 1	

NOTE:
BOTTOM CHORD HARDWARE INSTALLED
IN CONTRACT 1 NOT SHOWN FOR CLARITY

LEGEND:

- REMOVE SHADED MEMBERS
- REPLACE HATCHED MEMBERS

SCALE 3/16" = 1'-0
1 0 2 4 6 8

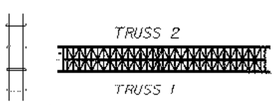

ELEVATION FRAMING SHEET

PROJECT NAME: CAMBRIDGE
PROJECT NUMBER: BHO 1448(31) C/2

FILE NAME: /00j244/str/sj244bdg.dgn
PROJECT LEADER: DAVID HOYNE
DESIGNED BY: M. GAGULIC
sj244efp.i

PLOT DATE: 07-AUG-2002
DRAWN BY: R. PELLETT
CHECKED BY: M. FOWLER
SHEET 16 OF 62

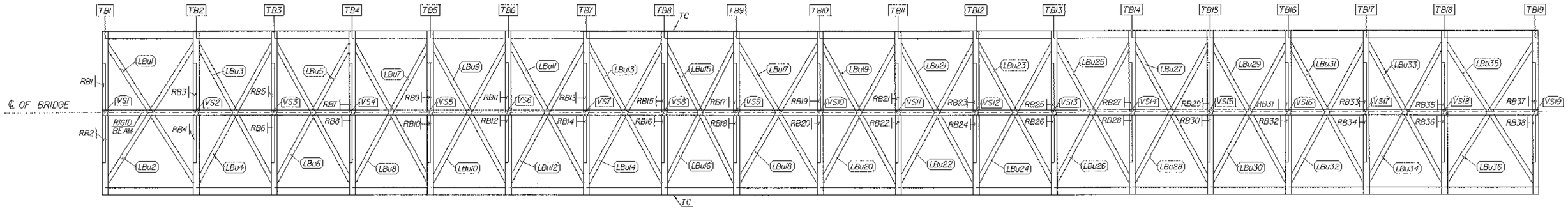

ROOF FRAMING PLAN

HARDWARE TO BE REPLACED

LOCATION	CONNECTED MEMBERS	ESTIMATED QUANTITY	ESTIMATED DIMENSION
BOTTOM CHORD	FLOOR BEAM AND VERTICAL POST	34 PC.	24" X 1" DIA. WITH 2 OGEE WASHERS
BOTTOM CHORD	VERTICAL POST AND BOTTOM CHORD	68 PC.	23" X 1" DIA. WITH 2 OGEE WASHERS
ARCH	ARCH AND VERTICAL POST	42 PC.	28" X 1" DIA. WITH 2 OGEE WASHERS
TOP CHORD	TIE BEAM AND TOP CHORD	38 PC.	25" X 1" DIA. WITH 2 OGEE WASHERS
BOTTOM CHORD	SPLICE JOINT	80 PC.	22" X 1" DIA. WITH 2 OGEE WASHERS
BOTTOM CHORD	FLOOR BEAM AND BOTTOM CHORD	4 PC	32" X 1" DIA. WITH 2 OGEE WASHERS
	TOTAL	266 PC.	

NOTES:

1. REPLACE ALL HARDWARE USED IN BOLTED CONNECTIONS.
2. ALL QUANTITIES ARE ESTIMATED.
3. VERIFY ALL DIMENSIONS IN THE FIELD.

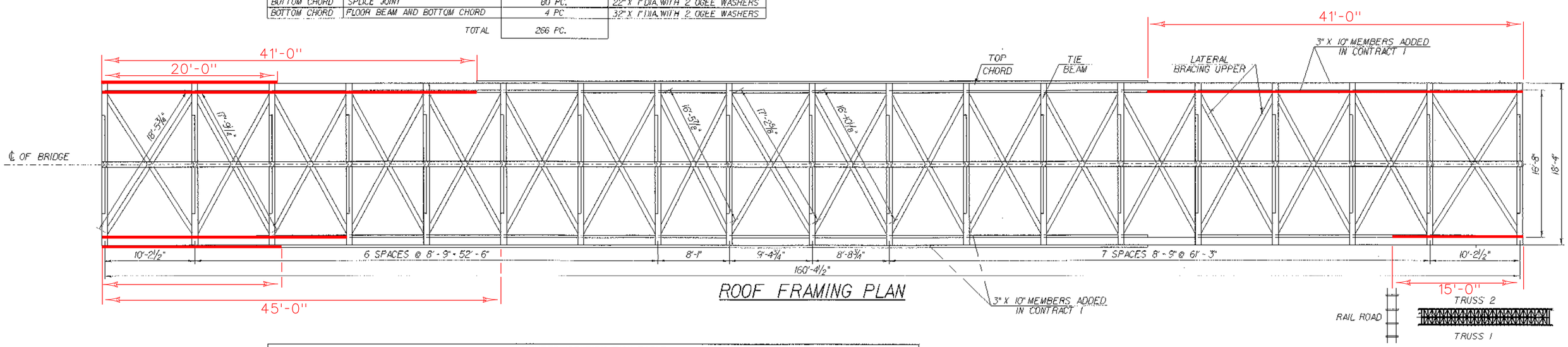

ROOF FRAMING PLAN

MEMBER IDENTIFICATION TABLE							
MEMBER	SYMBOL	LENGTH	WIDTH	THICKNESS	TOTAL NO.	TRUSS 1 REPLACE	TRUSS 2
TOP CHORD	TC	161' - 5½"	10"	10"	2		
ROOF BRACING	RB	5' - 10"	3½"	5"	38		
LATERAL BRACING UPPER	LBU	18' - 5¾"	6"	4"	36		
TIE BEAM	TB	18' - 4"	8"	9"	19		
VERTICAL SUPPORT	VS	3' - 6"	7"	7"	19		

SCALE 5/16" = 1'-0

1 0 2 4 6 8

ROOF PLAN SHEET

PROJECT NAME: CAMBRIDGE

PROJECT NUMBER: BHO 1448(31) C/2

FILE NAME: /001244/str/sj244bdg.dgn

PROJECT LEADER: DAVID HOYNE

DESIGNED BY: M. GAGULIC

sj244rfp.1

PLOT DATE: 07-AUG-2002

DRAWN BY: R. PELLETT

CHECKED BY: M. FOWLER

SHEET 17 OF 62

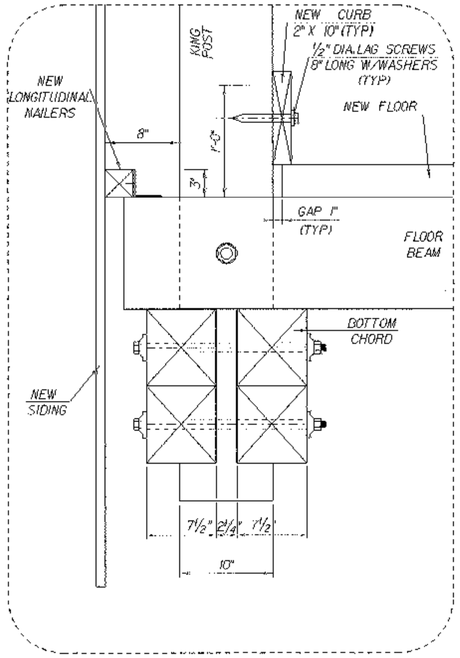

DETAIL "A"
SCALE 1 1/2" = 1'-0

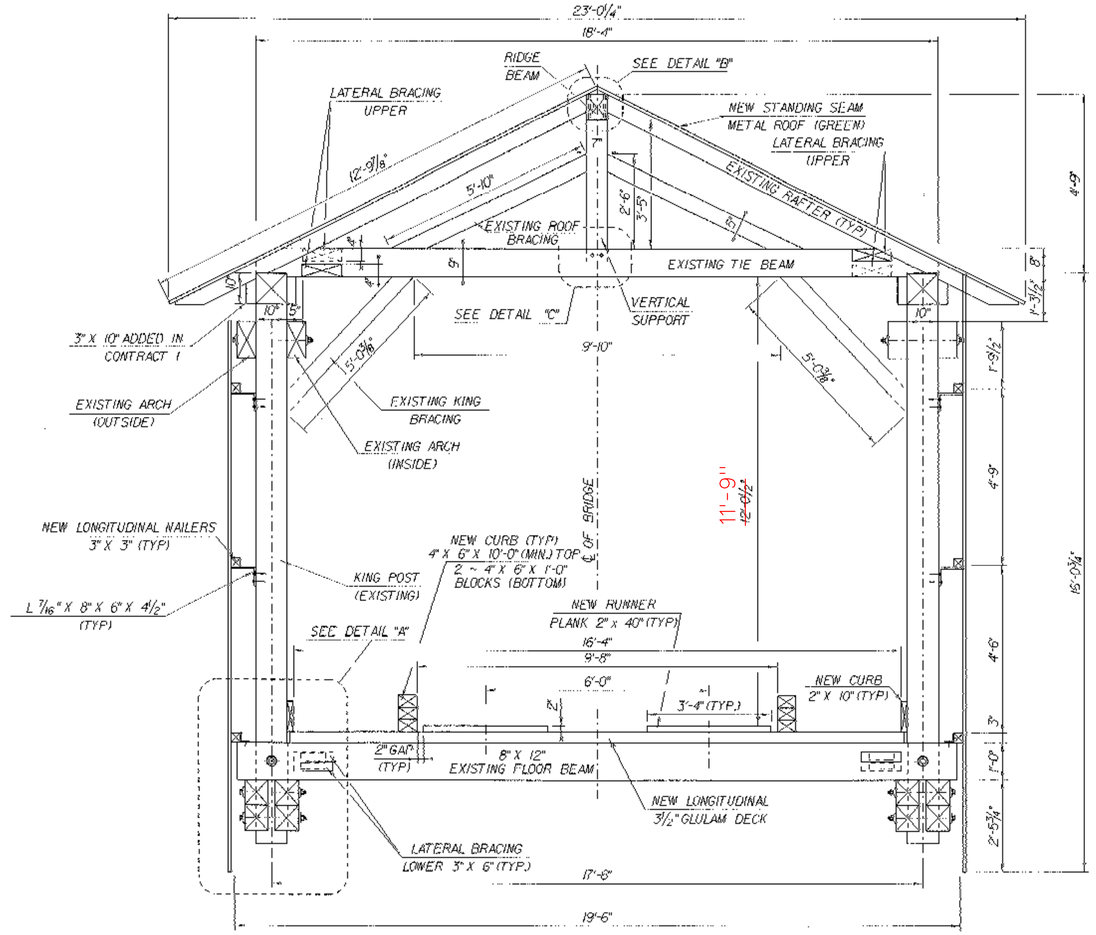

TYPICAL CROSS SECTION
@ MIDSPAN OF BRIDGE

SCALE 1/2" = 1'-0

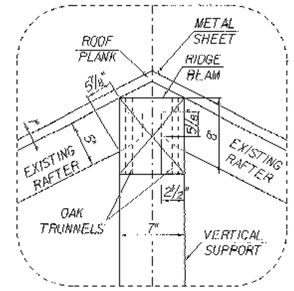

DETAIL "B"
SCALE 1 1/2" = 1'-0

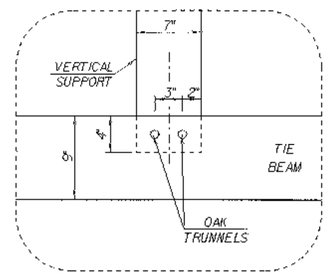

DETAIL "C"
SCALE 1 1/2" = 1'-0

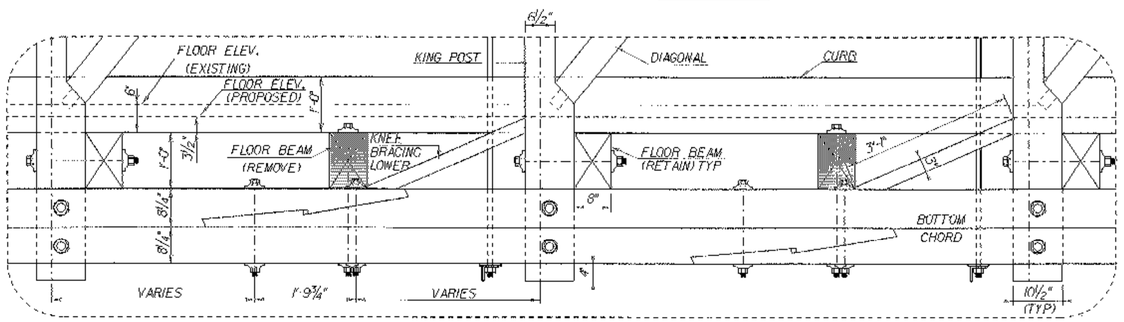

BOTTOM CHORD DETAIL
SCALE 3/4" = 1'-0

NOTE:

STEEL CHANNELS & RODS ADDED IN CONTRACT 1 ARE NOT SHOWN FOR CLARITY.

END SECTION SHEET

PROJECT NAME: CAMBRIDGE	
PROJECT NUMBER: BHO 1448(31) C/2	
FILE NAME: /00j244/str/sj244bdg.dgn	PLOT DATE: 22-OCT-2002
PROJECT LEADER: DAVID HOYNE	DRAWN BY: R. PELLETT
DESIGNED BY: M. GAGULIC	CHECKED BY: M. FOWLER
sj244sec.1	SHEET 18 OF 62

PROPOSED ELEVATIONS

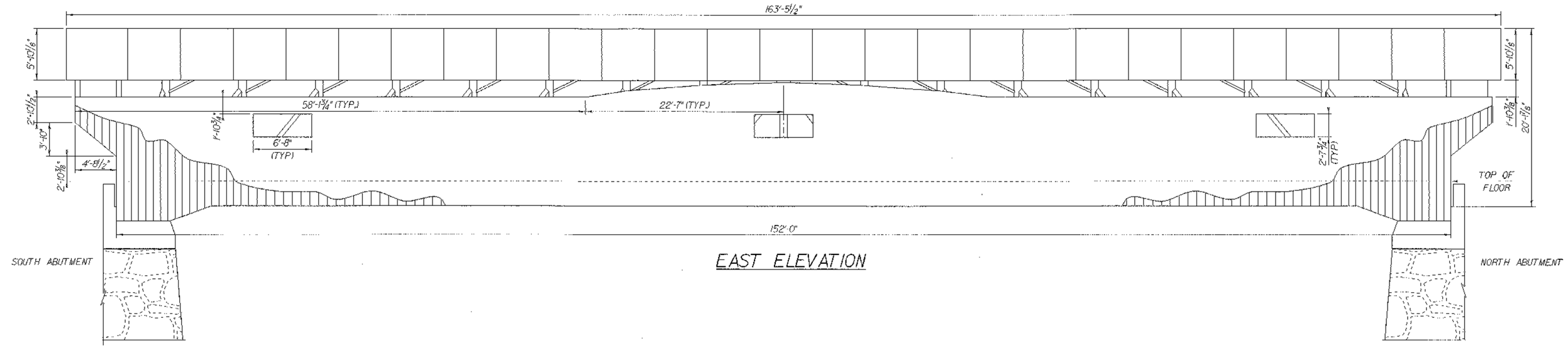

EAST ELEVATION

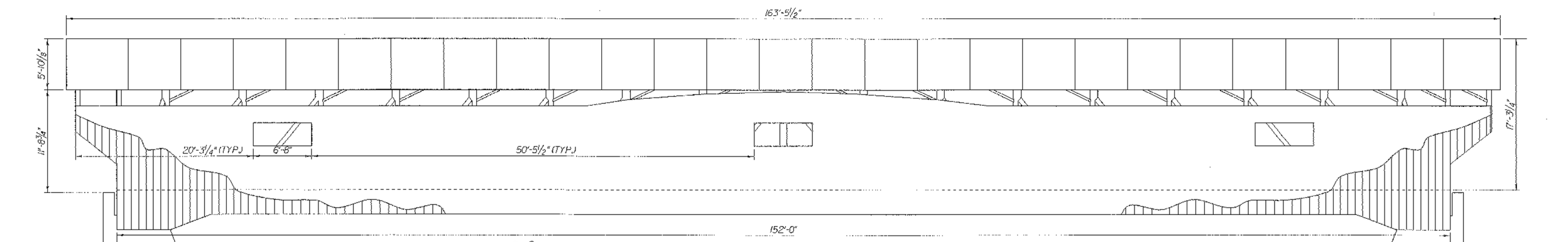

WEST ELEVATION

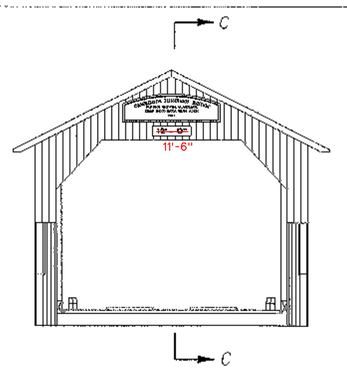

NORTH ELEVATON

SEE SHEET 22 FOR
SECTION C-C

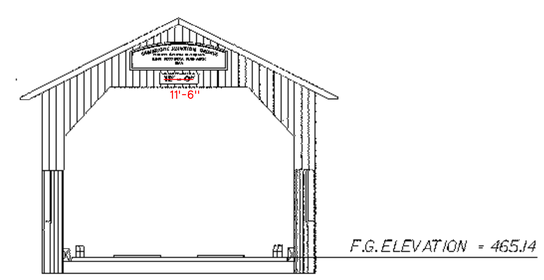

SOUTH ELEVATON

SCALE 3/16" = 1'-0
1 0 2 4 6 8

ELEVATION SHEET

PROJECT NAME: CAMBRIDGE	
PROJECT NUMBER: BHO 1448(31) C/2	
FILE NAME: /00J244/str/sJ244bdg.dgn	PLOT DATE: 07-AUG-2002
PROJECT LEADER: DAVID HOYNE	DRAWN BY: R. PELLETT
DESIGNED BY: M. GAGULIC	CHECKED BY: M. FOLWER
sJ244elev.1	SHEET 21 OF 62

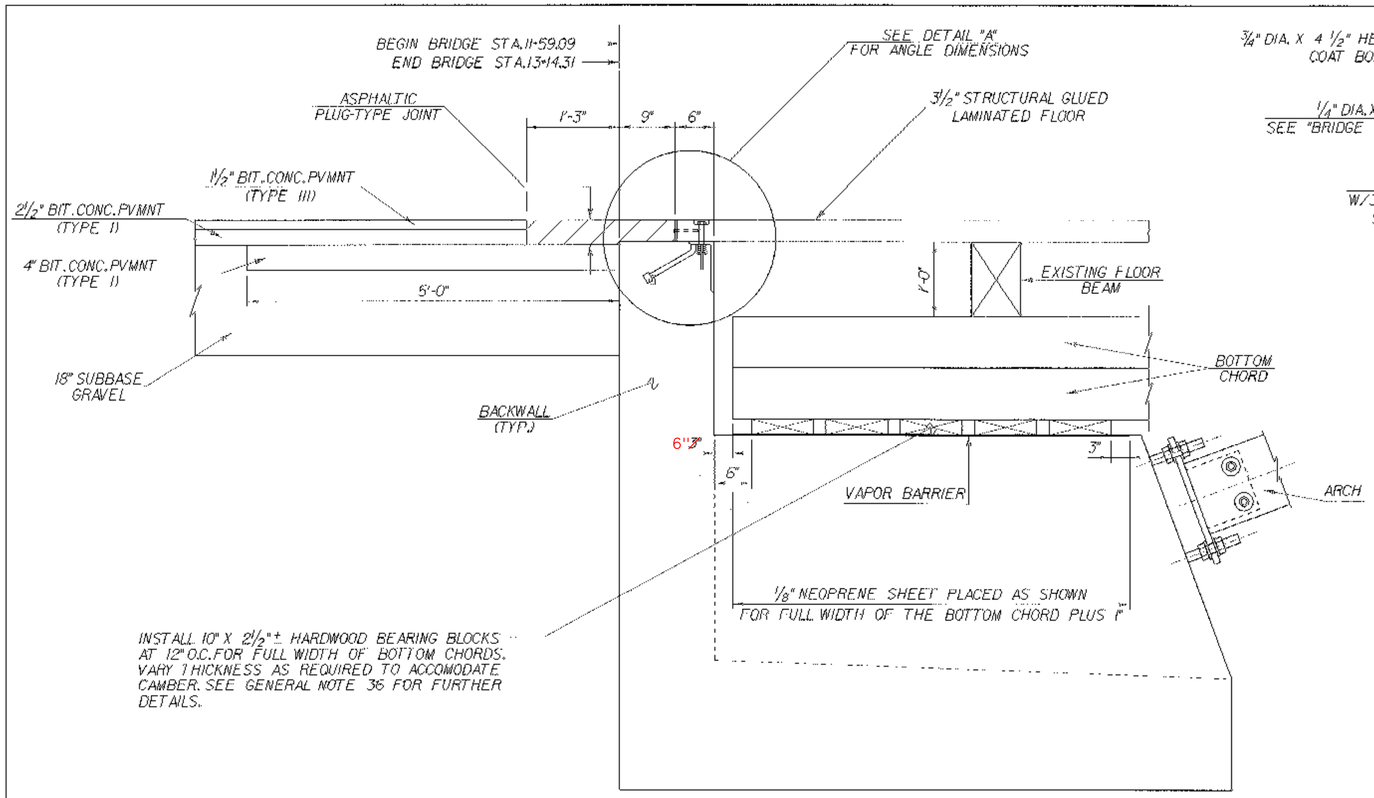

BRIDGE END TYPICAL SECTION

SCALE 1" = 1'-0

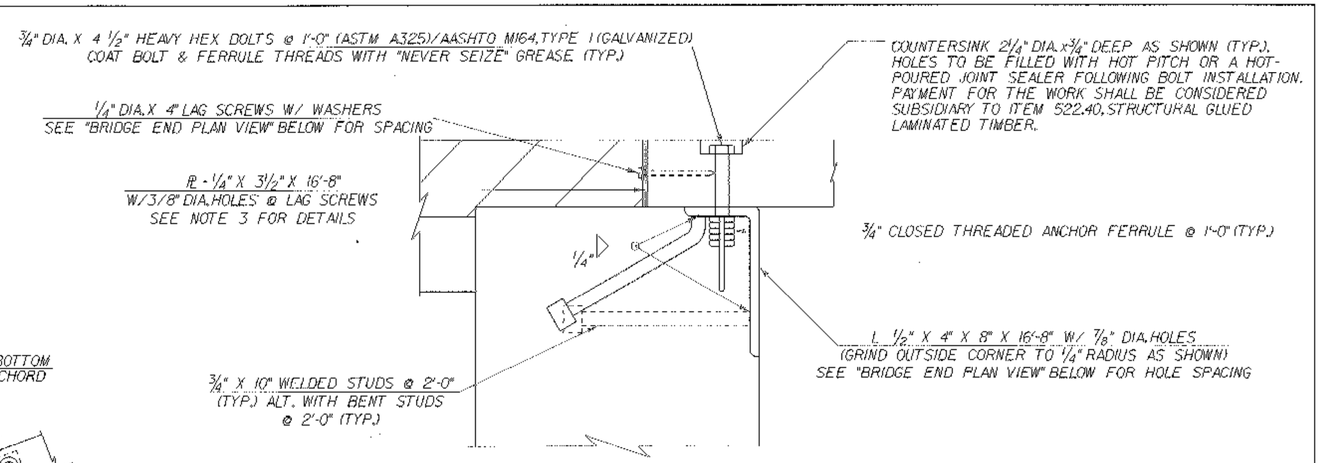

DETAIL "A"

SCALE 3" = 1'-0

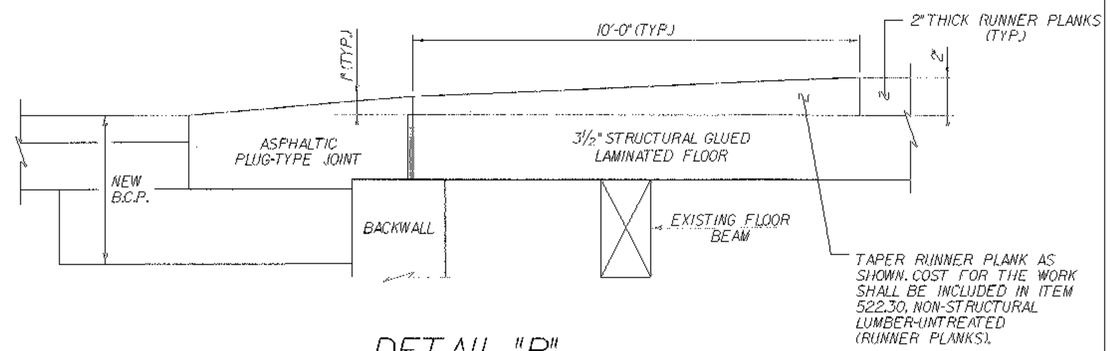

DETAIL "B"

NOT TO SCALE

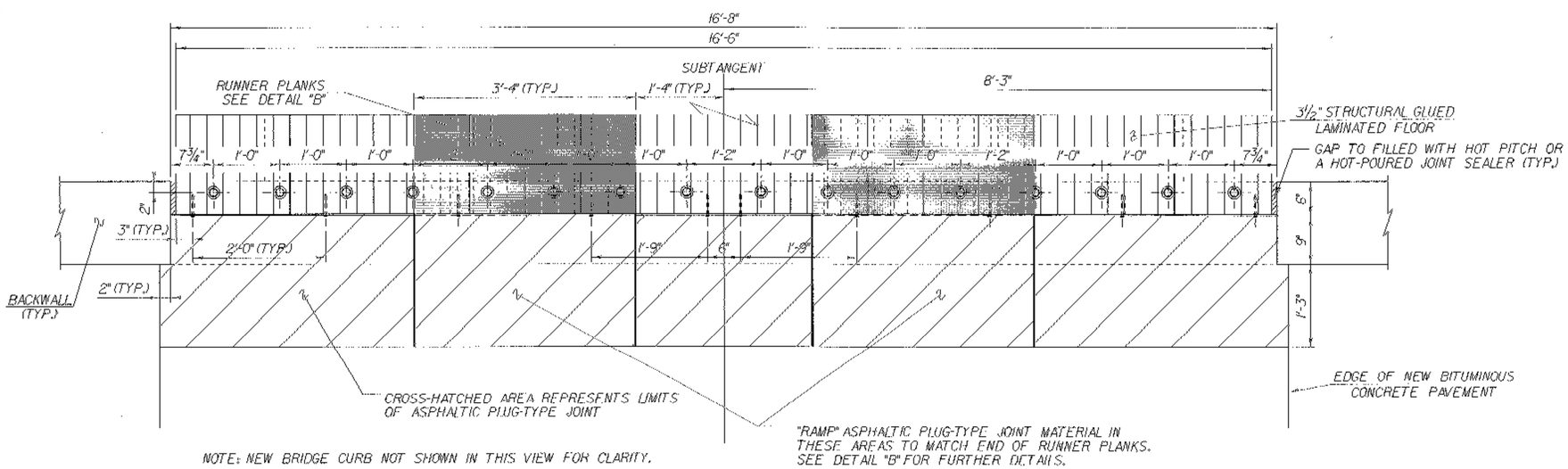

NOTE: NEW BRIDGE CURB NOT SHOWN IN THIS VIEW FOR CLARITY.

BRIDGE END PLAN VIEW

NOTES

1. UNLESS OTHERWISE SPECIFIED, ALL STEEL COMPONENTS SHALL BE AASHTO M270/M270, GRADE 36 OR BETTER, AND GALVANIZED OR METALIZED AS PER SUBSECTION 506.15 (a) OR (b).
2. THE ½" X 4" X 8" ANGLES SHALL BE FURNISHED AS ONE CONTINUOUS PIECE. THE ANGLES, STUDS, AND ANCHOR FERRULES SHALL BE SHOP ASSEMBLED AND SHIPPED AS ONE UNIT. ALL PREPARATION, WORK, AND MATERIALS NECESSARY TO COMPLETE THE INSTALLATION OF THIS UNIT SHALL BE PAID AS ITEM 516.10, BRIDGE EXPANSION JOINT (ANGLE UNIT).
3. ALL PREPARATION, WORK, AND MATERIALS NECESSARY TO COMPLETE THE INSTALLATION OF THE PLATE SHALL BE CONSIDERED SUBSIDIARY TO ITEM 522.40, STRUCTURAL GLUED LAMINATED TIMBER.
4. ITEM 516.10, BRIDGE EXPANSION JOINT (ASPHALTIC PLUG-TYPE JOINT) SHALL INCLUDE ALL NECESSARY PREPARATION, WORK, AND MATERIALS ASSOCIATED WITH THE INSTALLATION OF THE ASPHALTIC PLUG-TYPE JOINT AS DETAILED ON THIS SHEET.

BRIDGE END DETAIL SHEET

PROJECT NAME: CAMBRIDGE	
PROJECT NUMBER: BHO 1448(31) C/2	
FILE NAME: /00J244/str/sJ244abut2.dgn	PLOT DATE: 07-AUG-2002
PROJECT LEADER: D. HOYNE	DRAWN BY: M. FOWLER
DESIGNED BY: M. FOWLER	CHECKED BY: M. GAGULIC
sJ244ebd.1	SHEET 28 OF 62

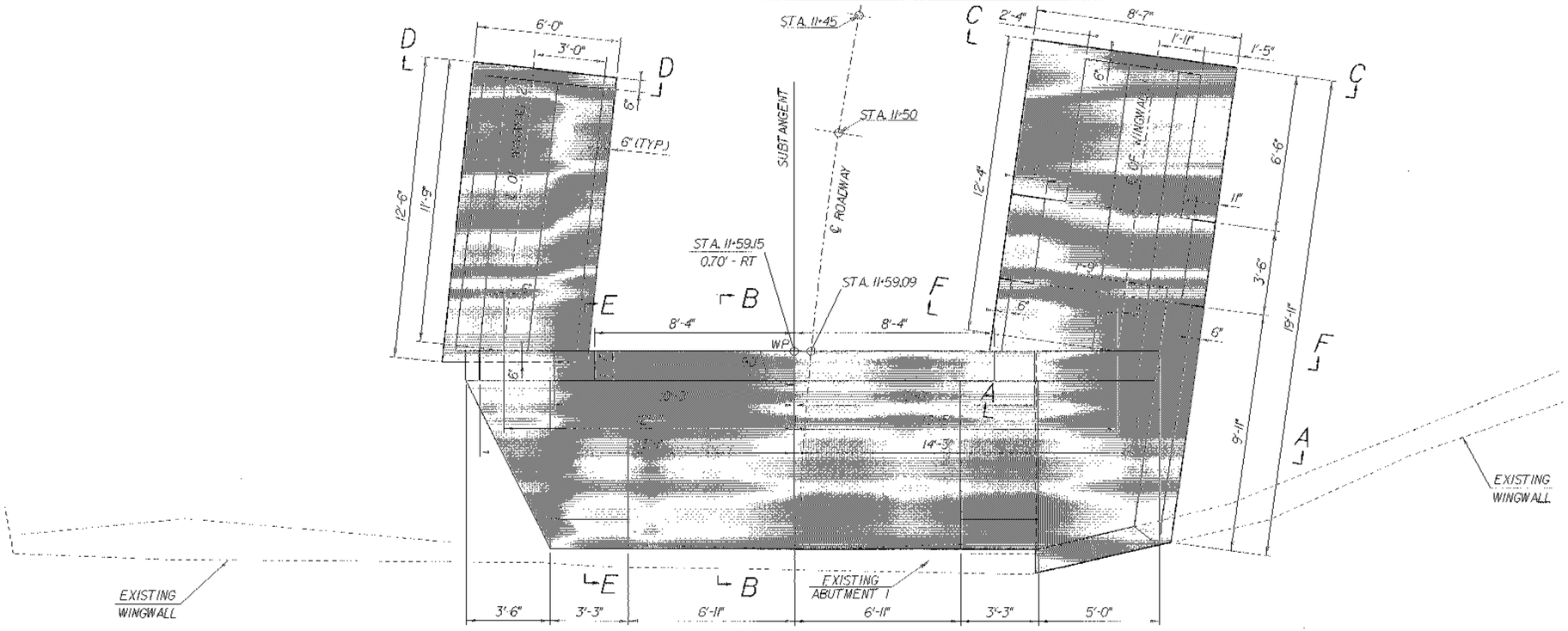

ABUTMENT 1 PLAN

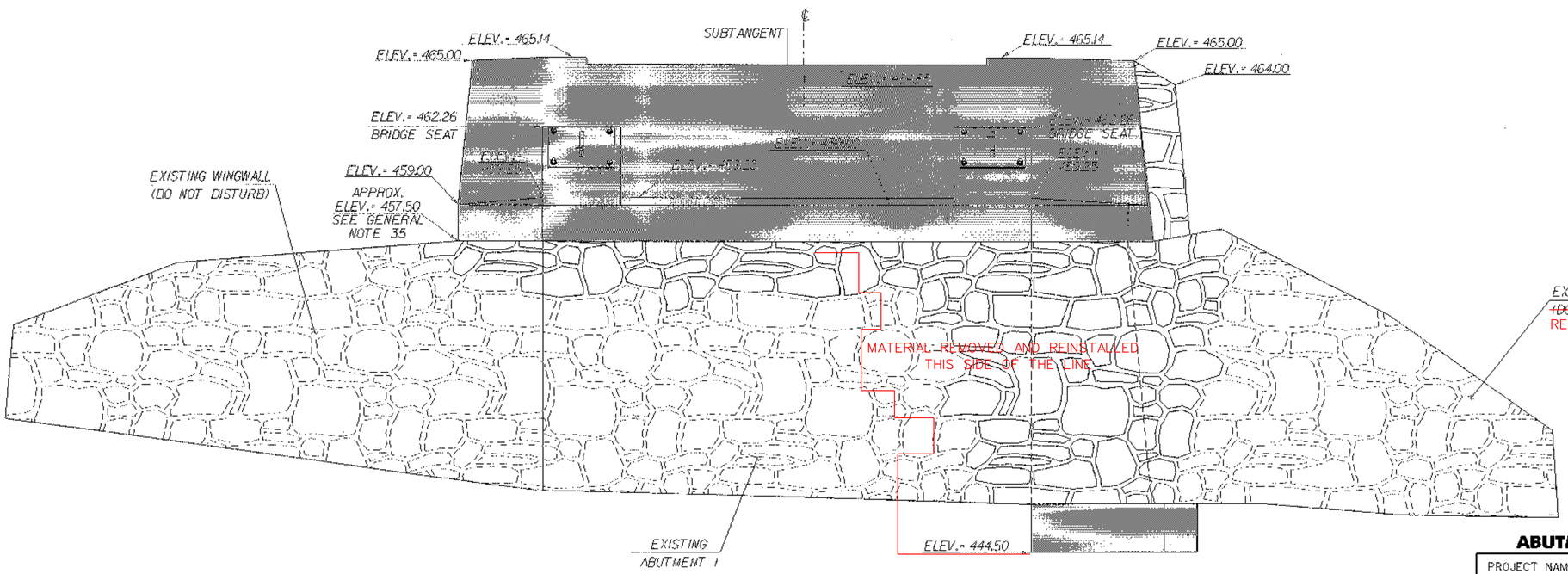

ELEVATION ABUTMENT 1

NEW CONCRETE

NEW STONE WALL

EXISTING LAID UP STONE

SCALE 3/8" = 1'-0

1 0 1 2 3 4

ABUTMENT 1 PLAN & ELEVATION SHEET

PROJECT NAME: CAMBRIDGE

PROJECT NUMBER: BHO 1448(31) C/2

FILE NAME: /001244/str/s1244abut1.dgn	PLOT DATE: 07-AUG-2002
PROJECT LEADER: D. HOYNE	DRAWN BY: R. PELLETT
DESIGNED BY: M. GAGULIC	CHECKED BY: M. FOWLER
s1244ale.1	SHEET 29 OF 62

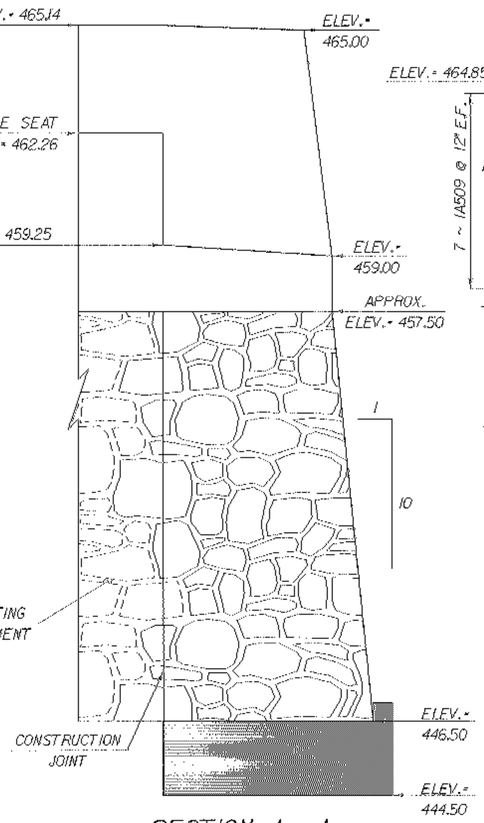

SECTION A - A
ABUTMENT 1

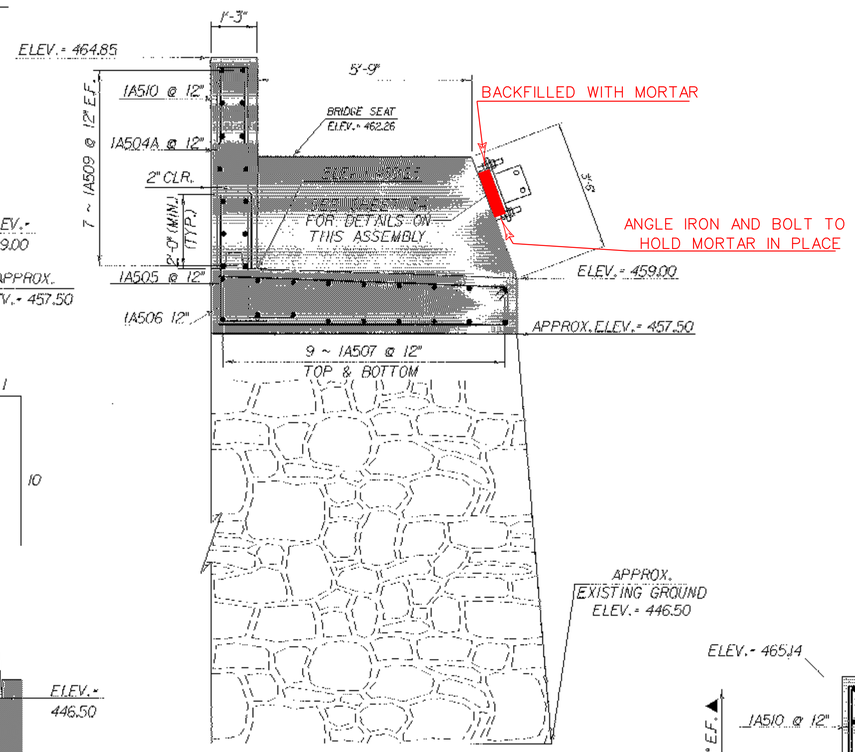

SECTION B - B
ABUTMENT 1

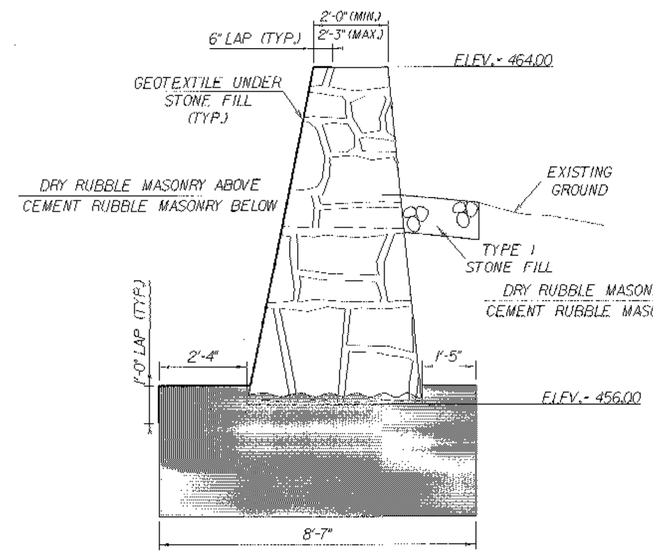

SECTION C - C
WINGWALL 1

* REINFORCING NOT
SHOWN FOR CLARITY

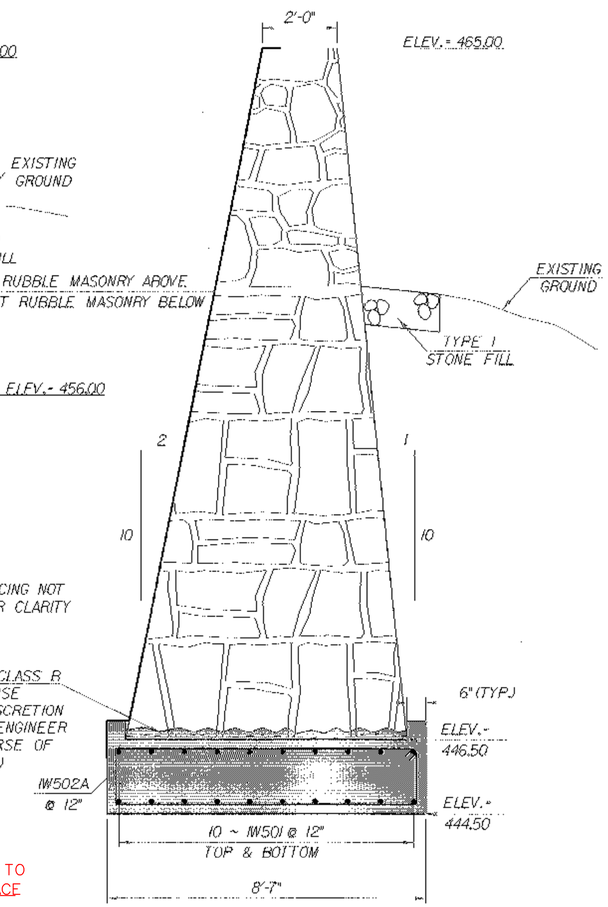

SECTION F - F
WINGWALL 1

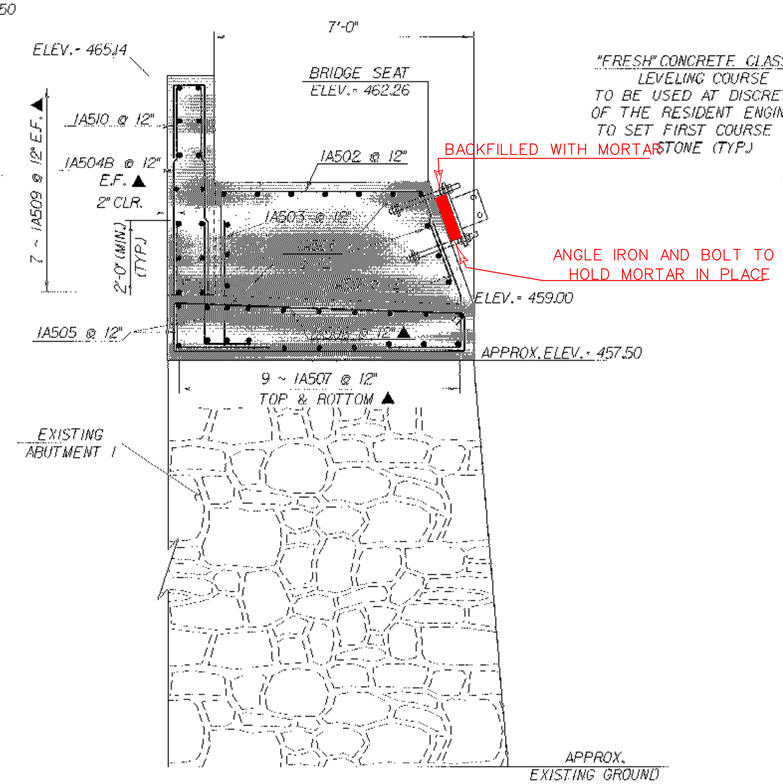

SECTION E - E
ABUTMENT 1

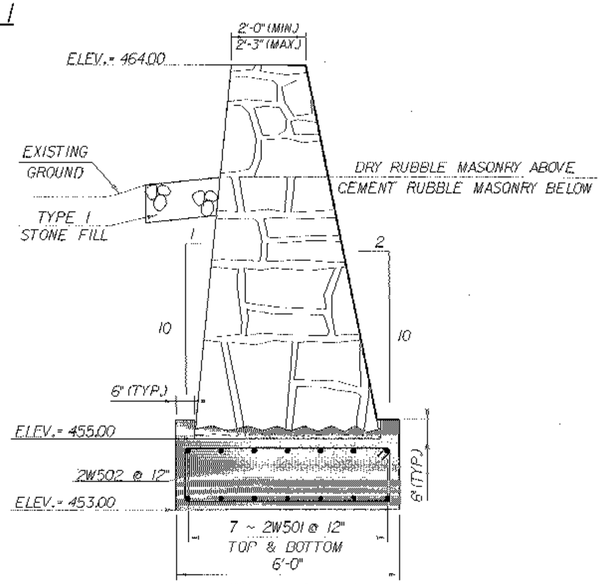

SECTION D - D
WINGWALL 2

NEW CONCRETE

NEW CEMENT MASONRY WALL (BELOW GRADE)

NEW DRY RUBBLE MASONRY WALL

EXISTING RUBBLE MASONRY ABUTMENT

SCALE ½" = 1'-0

1 0 1 2

ABUTMENT 1 SECTIONS SHEET

PROJECT NAME: CAMBRIDGE
PROJECT NUMBER: BHO 1448(31) C/2

FILE NAME: /00j244/str/sj244abut1.dgn
PROJECT LEADER: D. HOYNE
DESIGNED BY: M. GAGULIC
sj244als.1

PLOT DATE: 07-AUG-2002
DRAWN BY: R. PELLETT
CHECKED BY: M. FOWLER
SHEET 30 OF 62

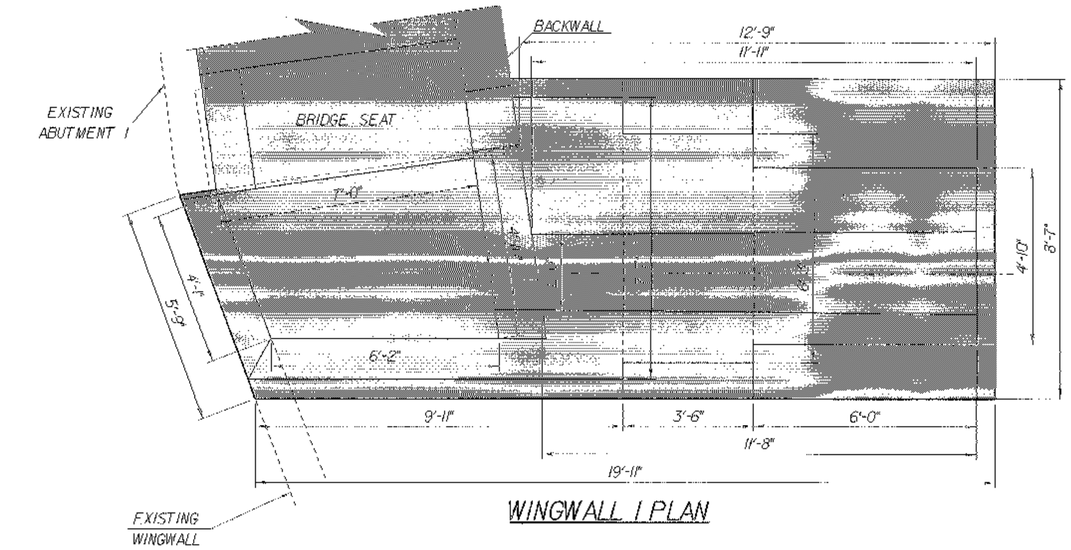

WINGWALL 1 PLAN

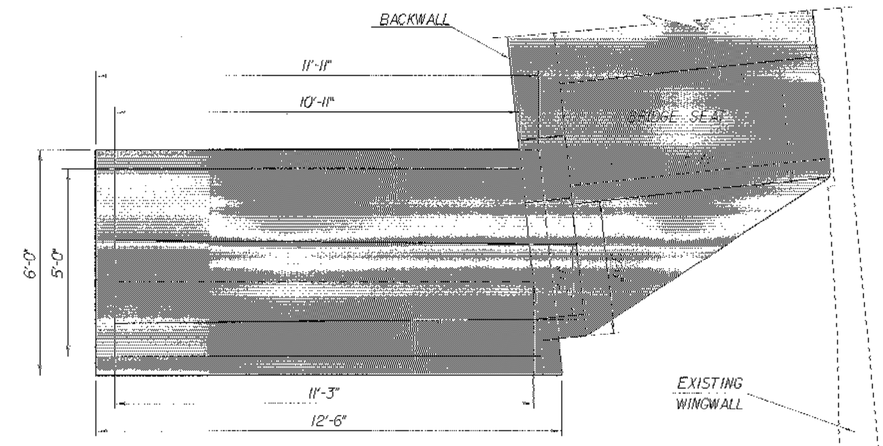

WINGWALL 2 PLAN

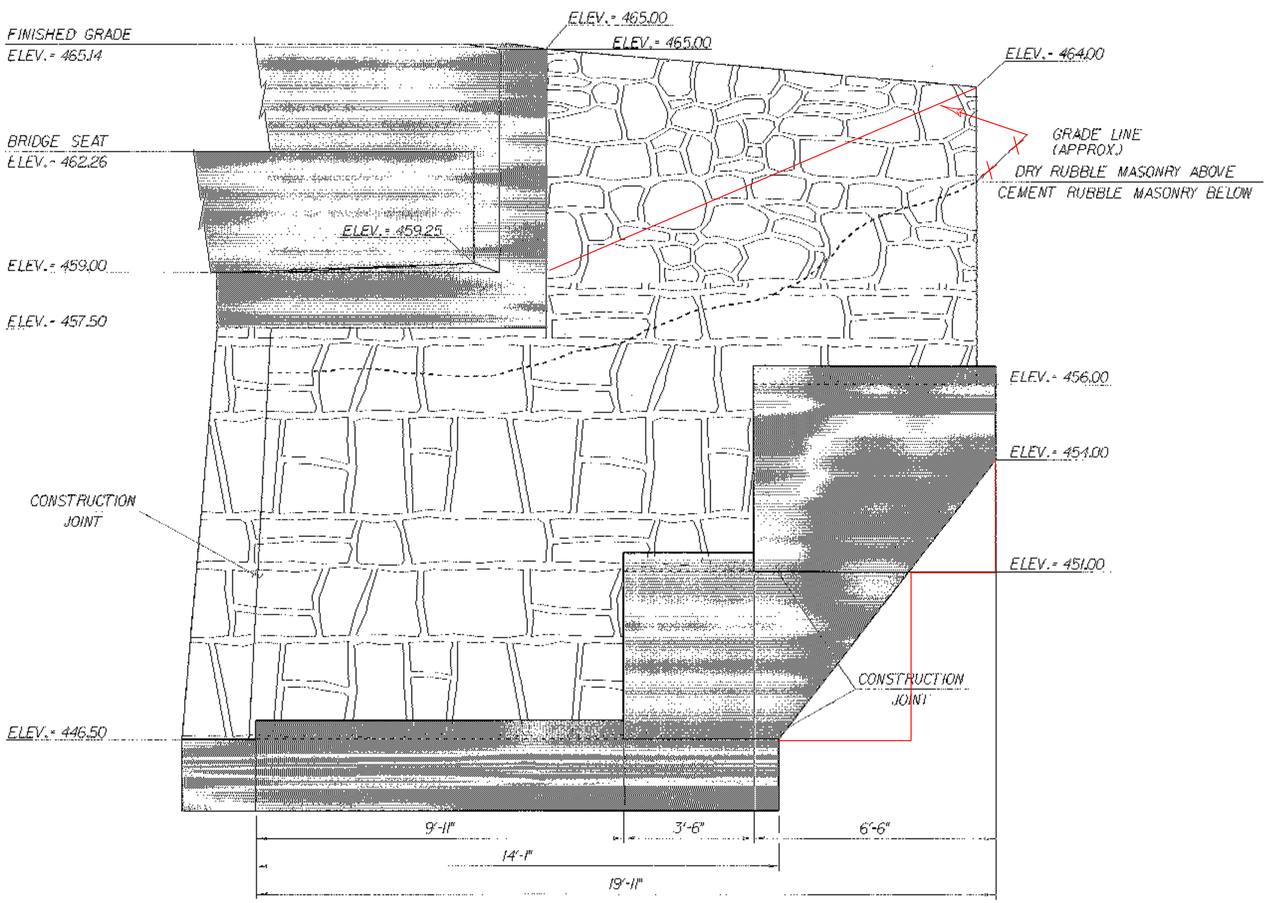

WINGWALL 1 ELEVATION

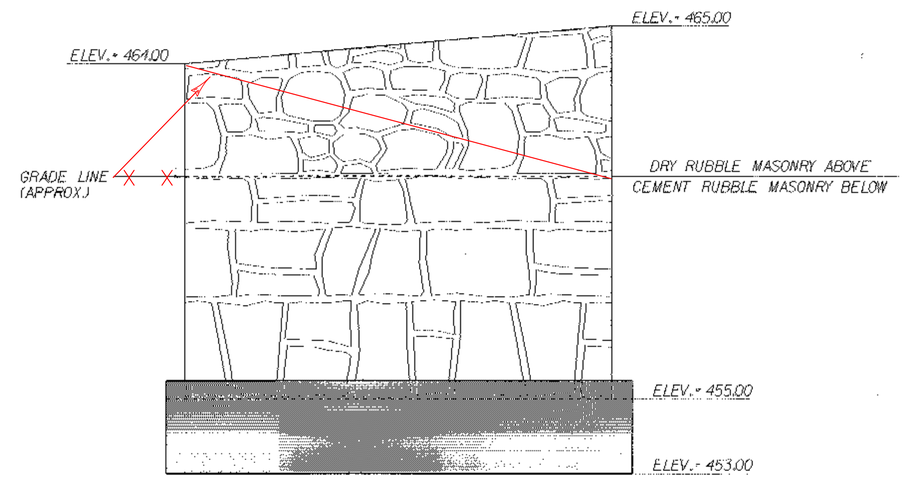

WINGWALL 2 ELEVATION

NEW CONCRETE

NEW CEMENT RUBBLE MASONRY WALL

NEW DRY RUBBLE MASONRY WALL

EXISTING RUBBLE MASONRY ABUTMENT

SCALE 1/2" = 1'-0

1 0 1 2

WINGWALL 1 & 2 SHEET

PROJECT NAME: CAMBRIDGE

PROJECT NUMBER: BHO 1448(31) C/2

FILE NAME: /001244/str/sj244abut1.dgn

PROJECT LEADER: D. HOYNE

DESIGNED BY: M. GAGULIC

sj244ww12.1

PLOT DATE: 07-AUG-2002

DRAWN BY: R. PELLETT

CHECKED BY: M. FOWLER

SHEET 31 OF 62

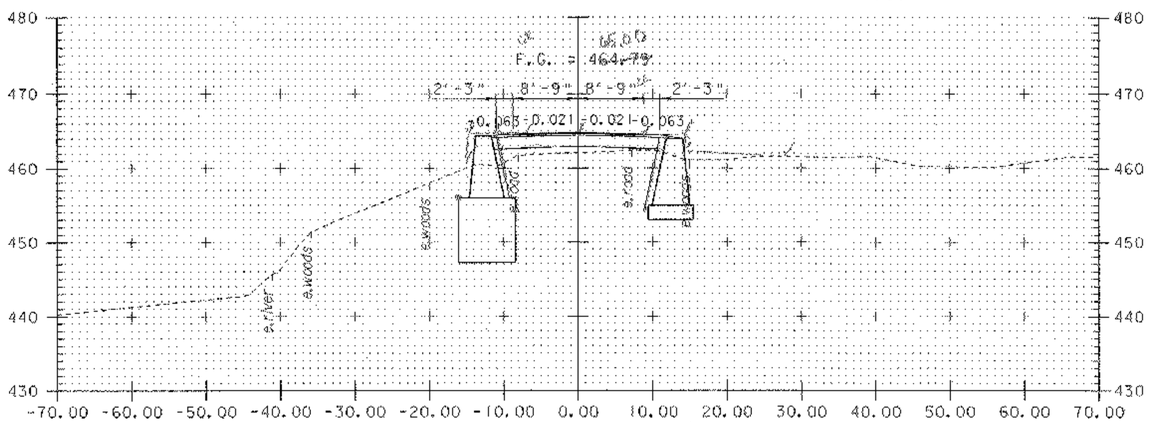

11+50.00

STA. 11+50.00 RT - BEGIN WINGWALL 2

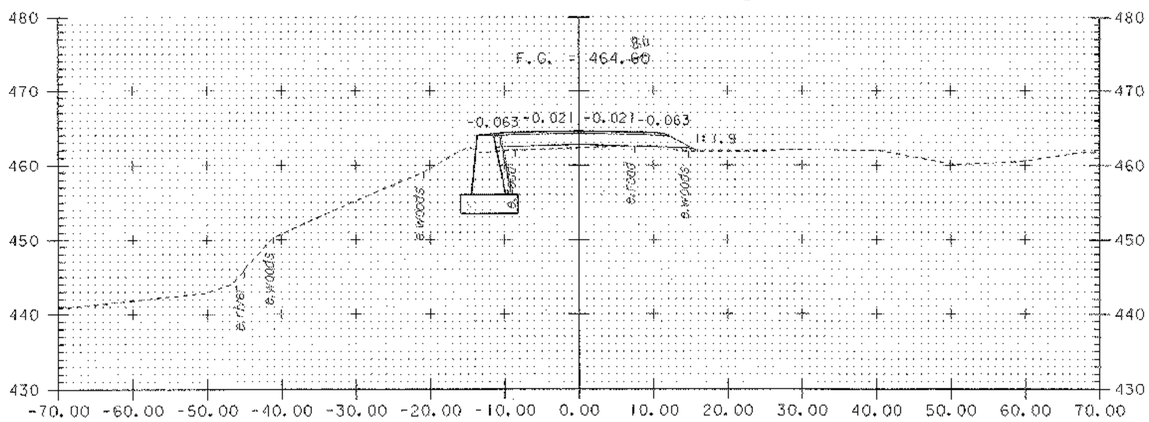

11+45.00

STA. 11+45 LT - BEGIN WINGWALL 1

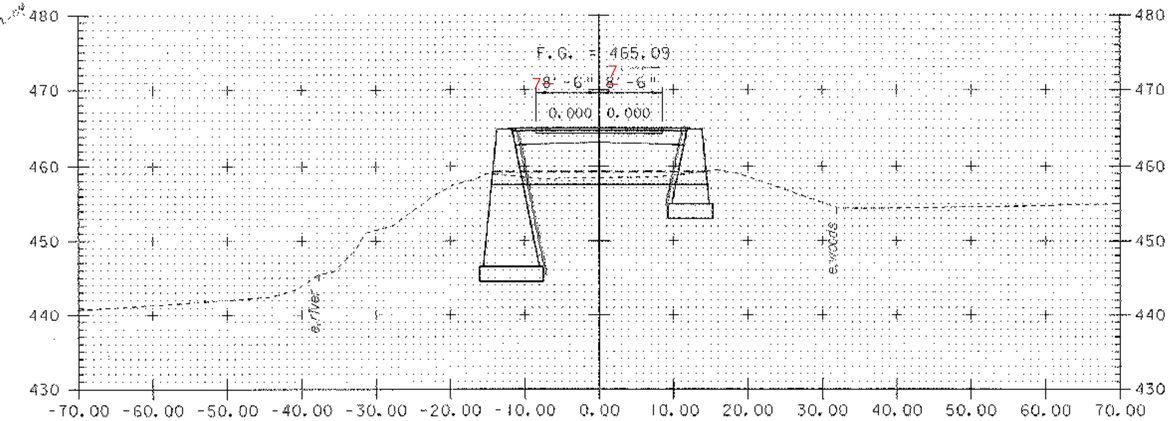

11+59.09

ASKEW 84°-27'-47"

BEGIN BRIDGE

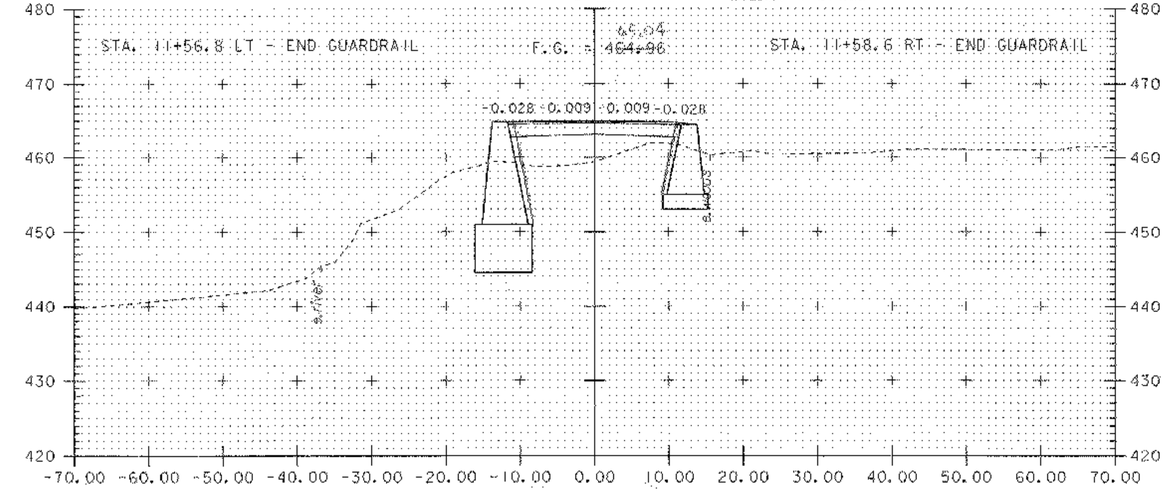

11+55.00

SCALE 1" = 10'-0

MAINLINE CROSS SECTIONS SHEET 2

PROJECT NAME: CAMBRIDGE	
PROJECT NUMBER: BHO 1448(31) C/2	
FILE NAME: /00j244/str/sj244xsl.dgn	PLOT DATE: 07-AUG-2002
PROJECT LEADER: D. HOYNE	DRAWN BY: R. PELLETT
DESIGNED BY: M. FOWLER	CHECKED BY: M. GAGULIC
sj244m02.i	SHEET 43 OF 62

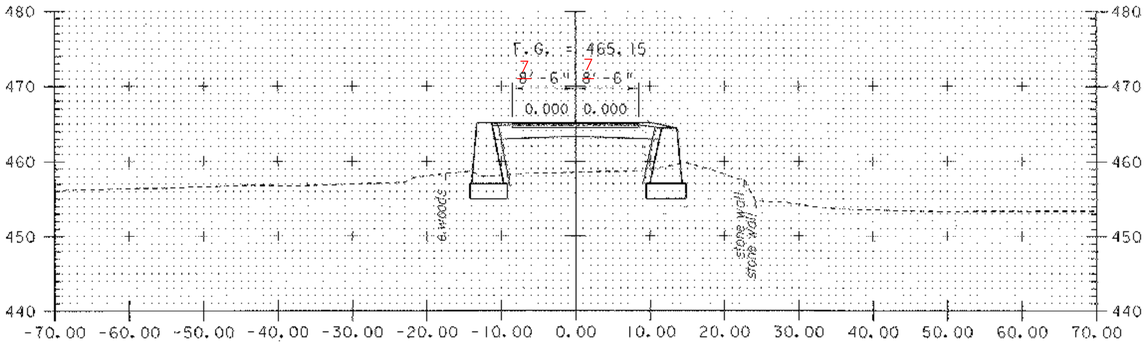

13+14.31

ASKEW 88°-50'-56''

END BRIDGE

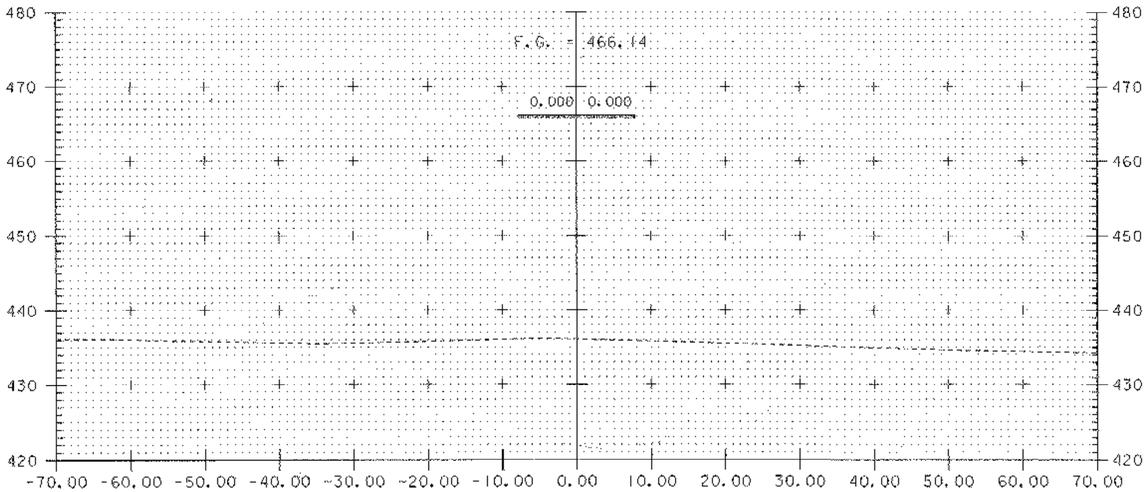

12+25.00

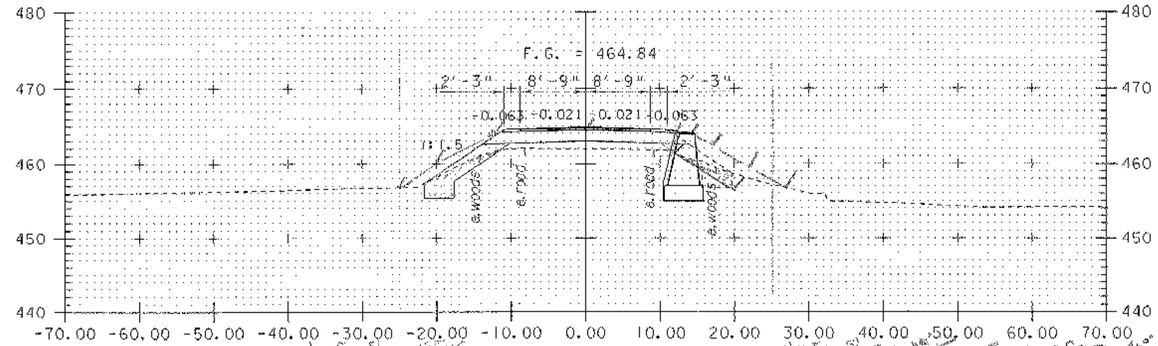

13+25.00

STA. 13+23.11 LT - END WINGWALL 3, BEGIN STONE FILL TYPE II W/6" GRUBBING MATERIAL AND EROSION MATTING
STA. 13+25.00 RT - END WINGWALL 4, BEGIN STONE FILL TYPE II W/6" GRUBBING MATERIAL AND EROSION MATTING

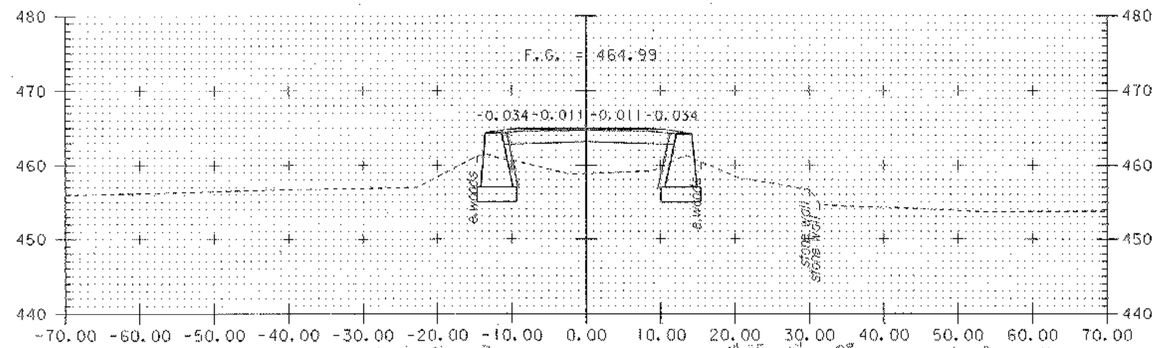

13+20.00

STA. 13+19.0 LT - BEGIN GUARDRAIL

STA. 13+20.1 RT - BEGIN GUARDRAIL

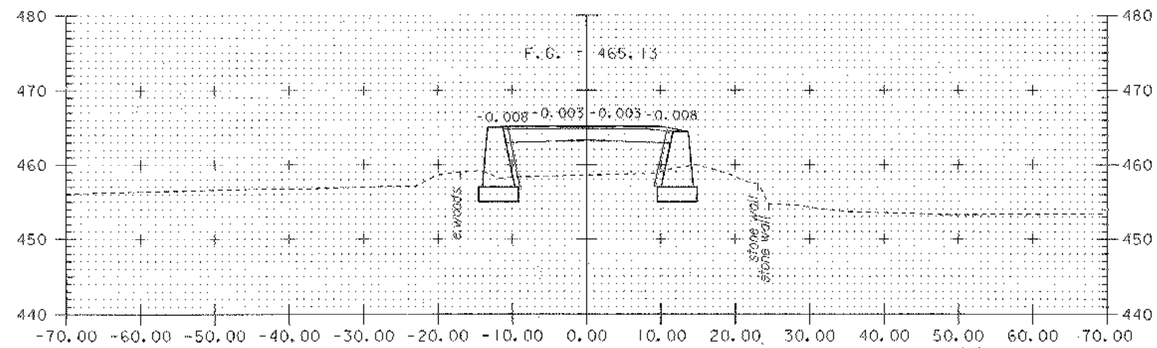

13+15.00

SCALE 1" = 10'-0

MAINLINE CROSS SECTIONS SHEET 3

PROJECT NAME: CAMBRIDGE	
PROJECT NUMBER: BHO 1448(31) C/2	
FILE NAME: /00j244/str/sj244xsl.dgn	PLOT DATE: 07-AUG-2002
PROJECT LEADER: D. HOYNE	DRAWN BY: R. PELLETT
DESIGNED BY: M. FOWLER	CHECKED BY: M. GACULIC
sj244m03.1	SHEET 44 OF 62