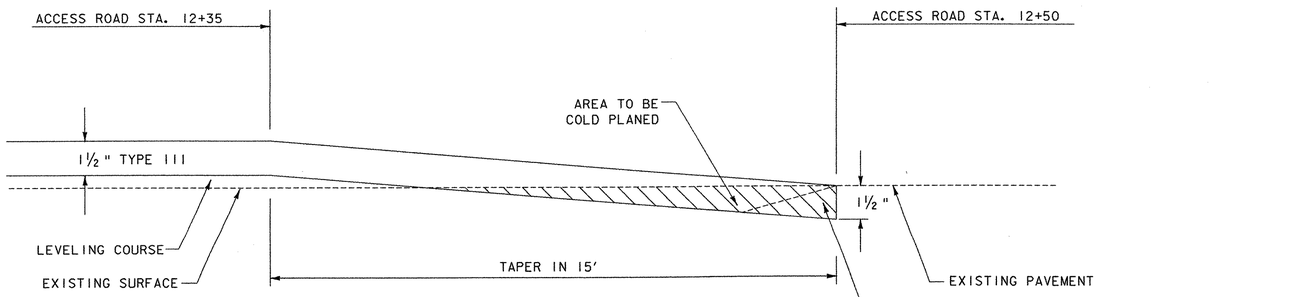

APPROACH AREA DETAIL - ACCESS ROAD

NOT TO SCALE

FULL ROADWAY WIDTH

(END LEVEL AND OVERLAY)

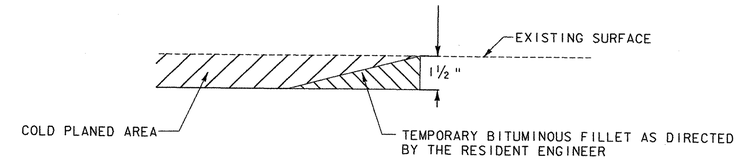

DETAIL AT VERTICAL JOINTS

NOT TO SCALE

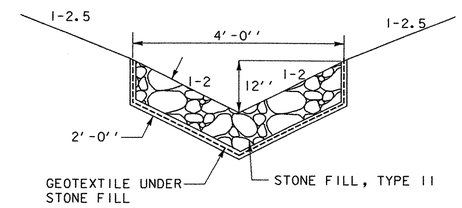

NOTE: EXCAVATION PAID FOR AS COMMON EXCAVATION.

STONE LINED PILOT CHANNEL

NOT TO SCALE

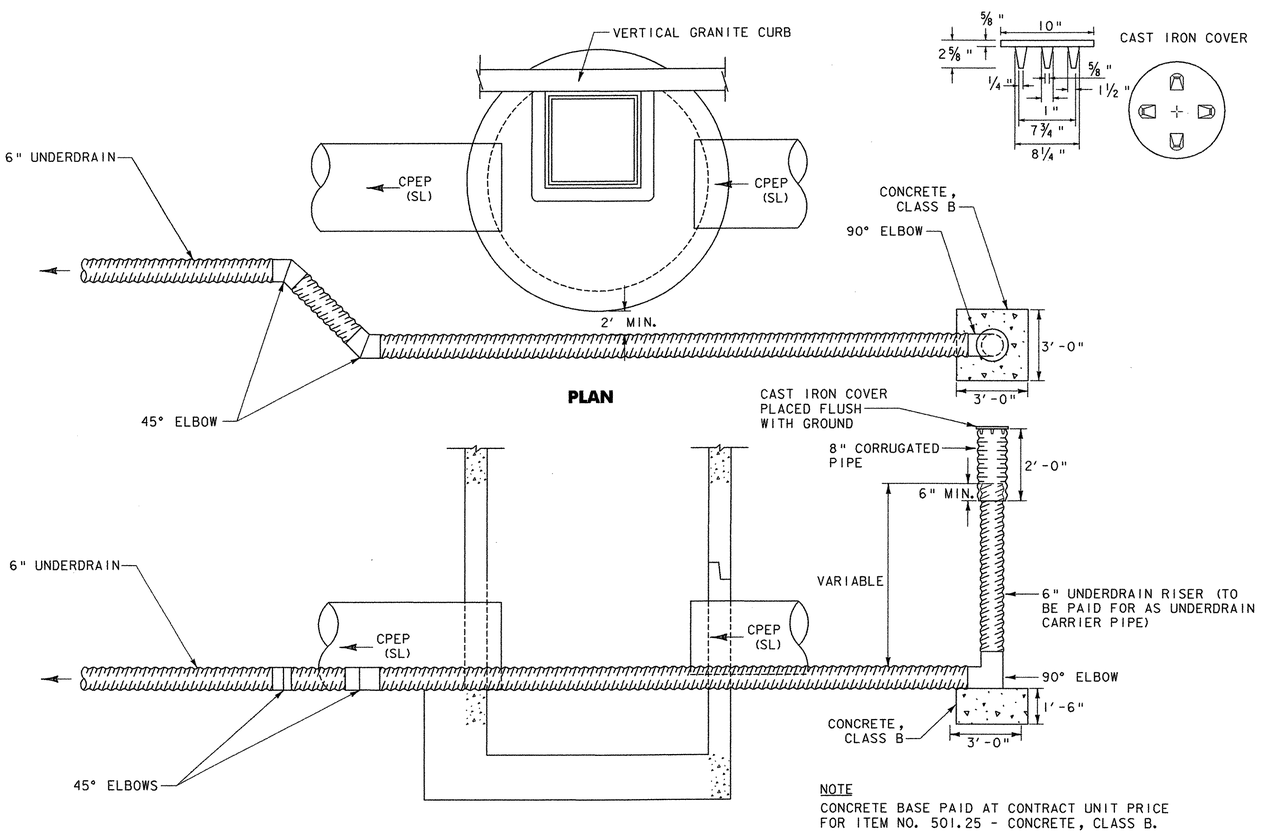

NOTE

CONCRETE BASE PAID AT CONTRACT UNIT PRICE FOR ITEM NO. 501.25 - CONCRETE, CLASS B.

SECTION

UNDERDRAIN FLUSHING BASIN DETAIL (NEAR DI-1 AND CB-3)

NOT TO SCALE

SEE VTrans STANDARD D-4 FOR PIPE ELBOW AND COUPLING BAND DETAILS

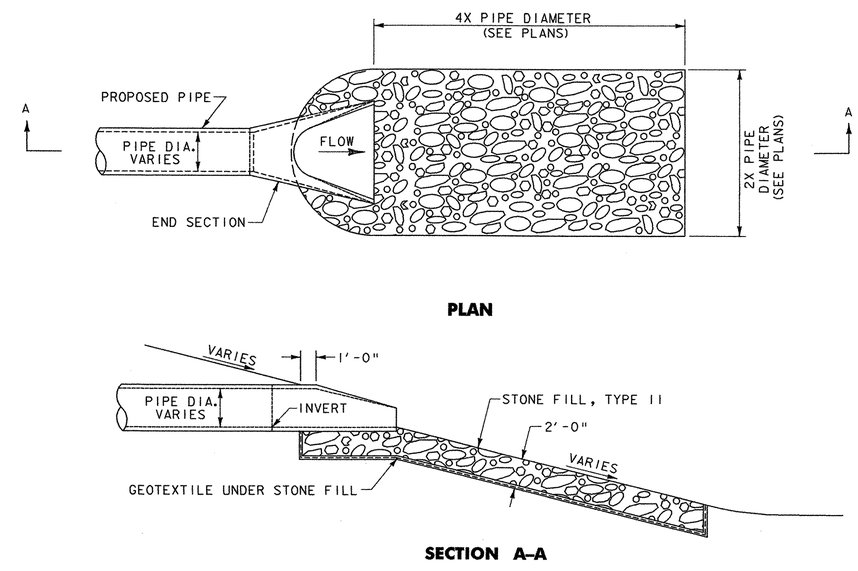

STORM DRAIN OUTLET PROTECTION

NOT TO SCALE

Dufresne-Henry

PROJECT NAME: COLCHESTER PARK-AND-RIDE	
PROJECT NUMBER: CMG PARK(18)S	
FILE NAME: zk062frm.dgn	PLOT DATE: 07/08/02
PROJECT LEADER: WLD	DRAWN BY: GGG
DESIGNED BY: CSP	CHECKED BY: GAE
PAVEMENT AND DRAINAGE DETAIL	SHEET 5 OF 56

...\05 PAVEMENT DETAILS.dgn 07/08/02 10:36:23 AM