Metric

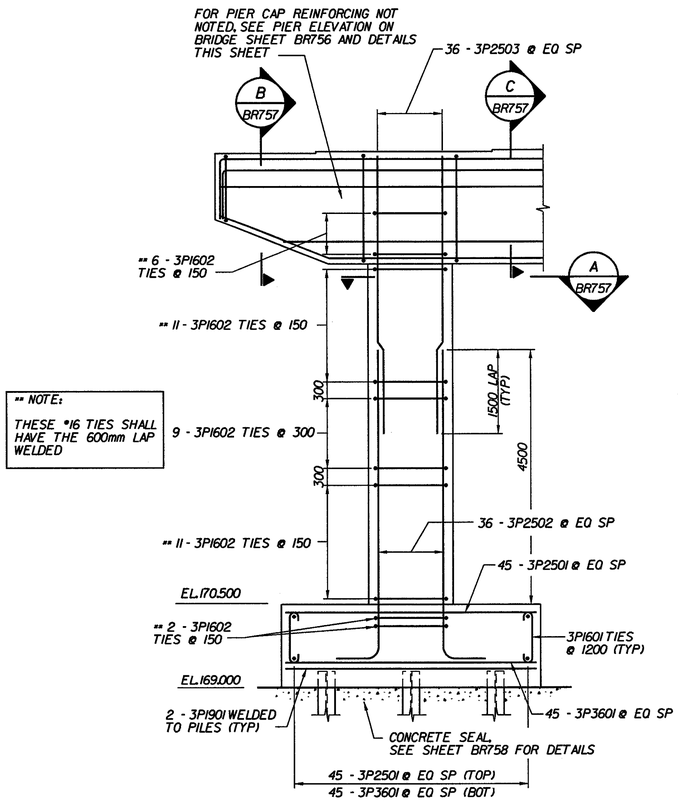

PIER 3 TYPICAL COLUMN REINFORCEMENT

1m 0 1m

1:50

P3_DET01

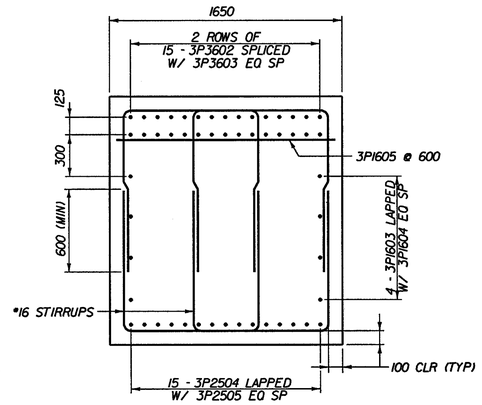

B BR757 PIER CAP SECTION

.4 m 0 .4 m

1:20

P3_DET03

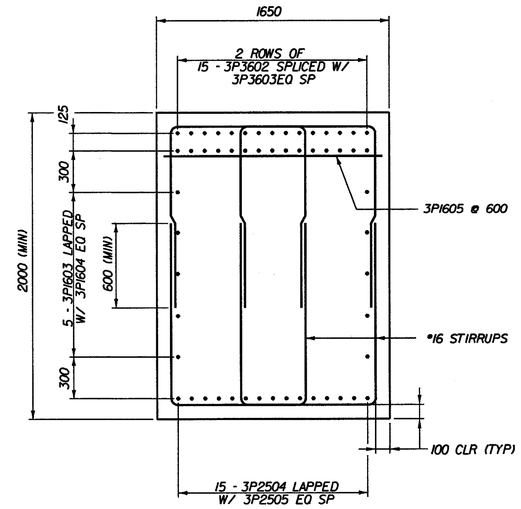

C BR757 PIER CAP SECTION

.4 m 0 .4 m

1:20

P3_DET02

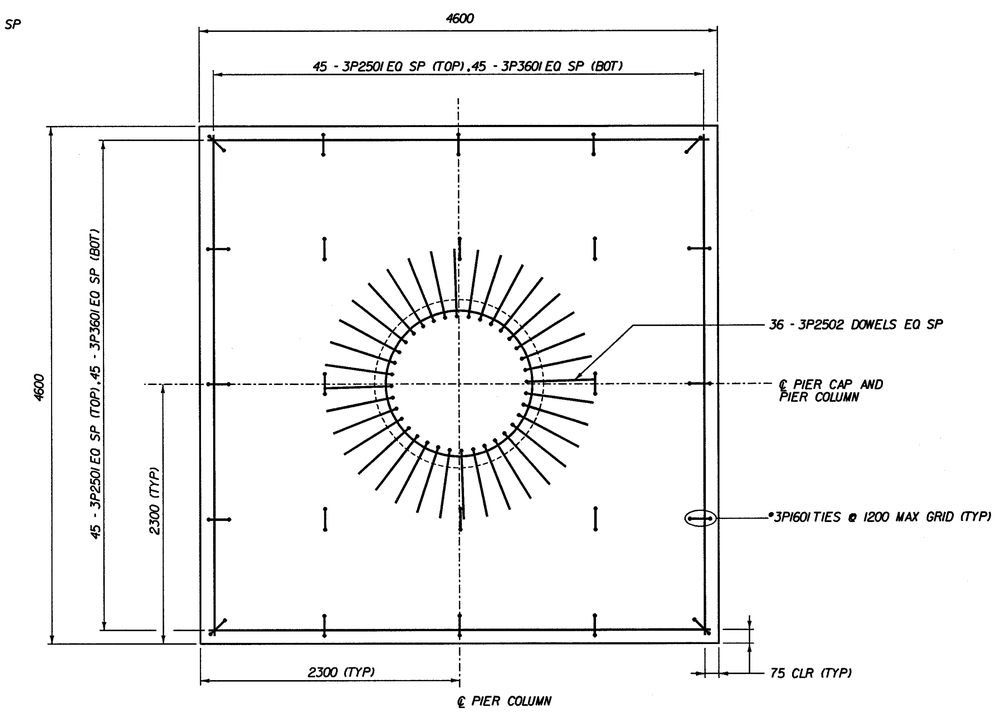

TYPICAL PIER FOOTING REINFORCEMENT PLAN

.5 m 0 .5 m

1:25

P3_DET05

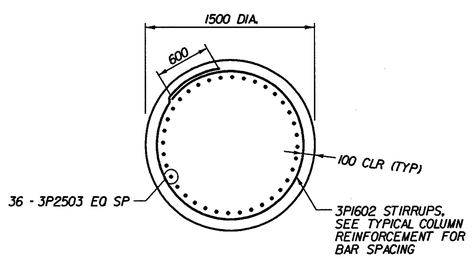

A BR757 TYPICAL COLUMN SECTION

.5 m 0 .5 m

1:25

P3_DET04

STATE OF VERMONT
AGENCY OF TRANSPORTATION

Town Of	BENNINGTON	Bridge No.	BR700
		Log Sta.	
Highway No.	VT. RTE. 9	Surv. Sta.	16+800

VT. RTE. 9 OVER SILK ROAD AND WALLOOMSAC RIVER

PIER 3 SECTIONS AND DETAILS

Designed By	C. TUTUNJIAN	Drawn by	J. HOTALING/B. WEATHERBY
Checked By	D. VIENI Date 6/00	Bridge Design Supervisor	M.W. OLSTAD Date 9/00
PROJECT	BENNINGTON-HOOSICK	PROJECT NO.	D.P.I. 0146(1) C/4
I.G.C. Info.			
Bridge Sheet No.	BR757		Sheet 240 OF 385

CHA CLOUGH, HARBOUR & ASSOCIATES LLP
ENGINEERS, SURVEYORS, PLANNERS & LANDSCAPE ARCHITECTS
11 WINNERS CIRCLE ALBANY, NEW YORK, 12205

F:\3573\15\BR700\P3_SHT02\6.B59\ADNSR.M