VAOT Metric

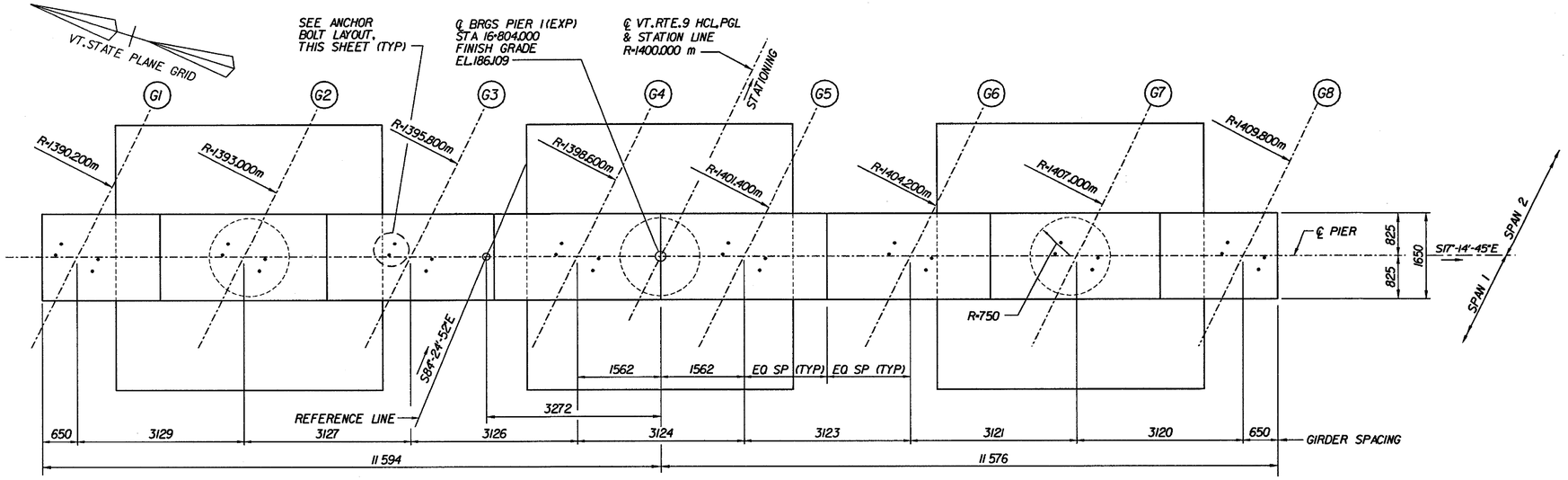

PIER 1 PLAN

1m 0 1m
1:50

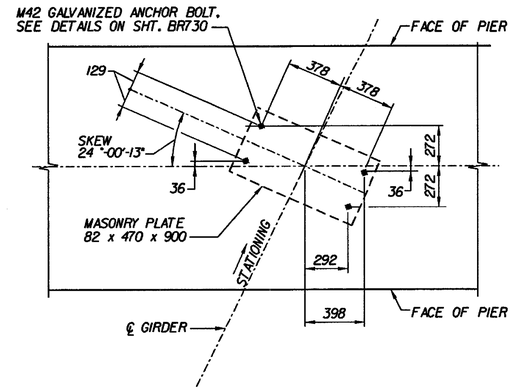

PLAN-ANCHOR BOLT LAYOUT (PIER 1)

.4m 0 .4m
1:20
ABUT-3

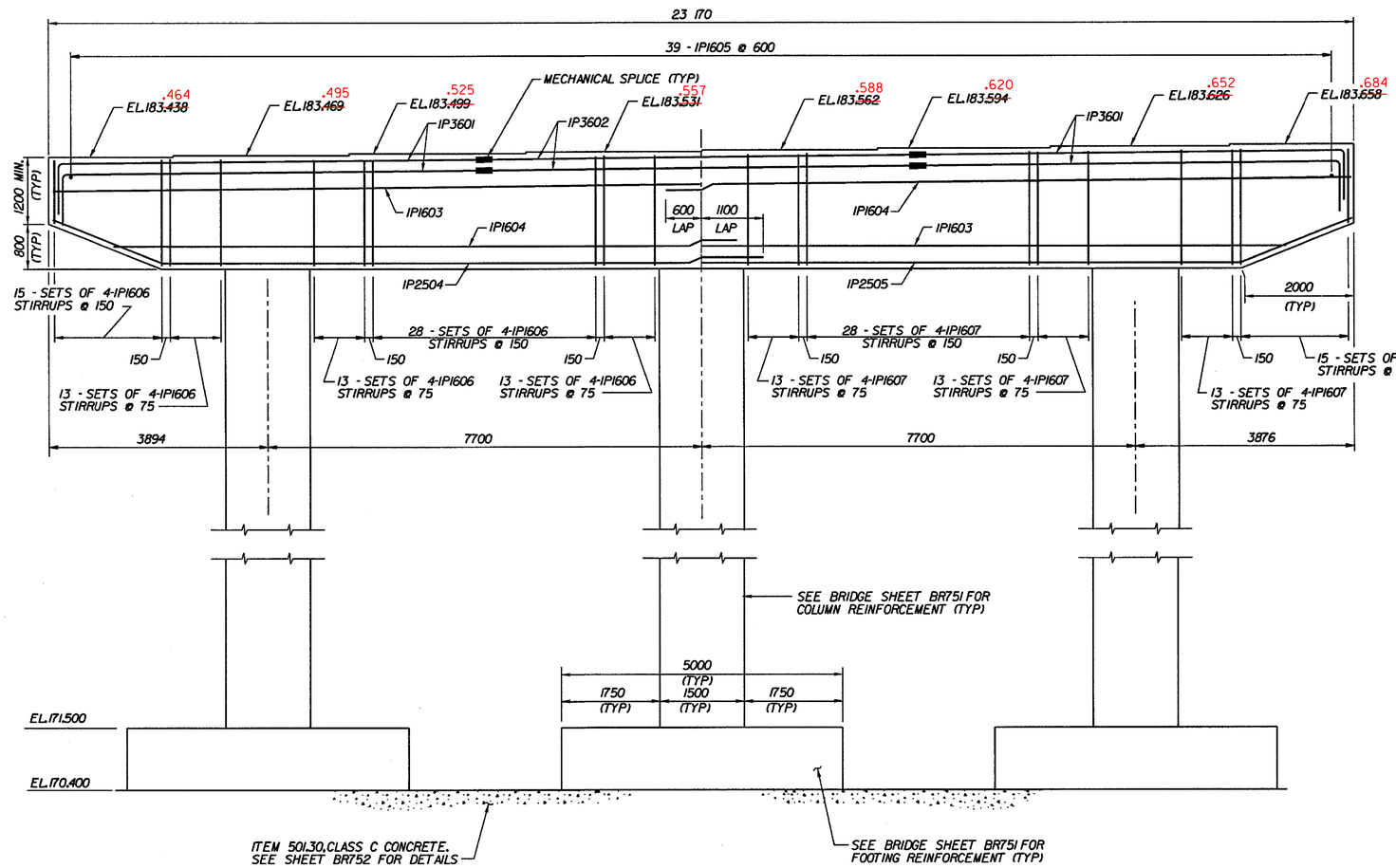

PIER 1 ELEVATION

1m 0 1m
1:50

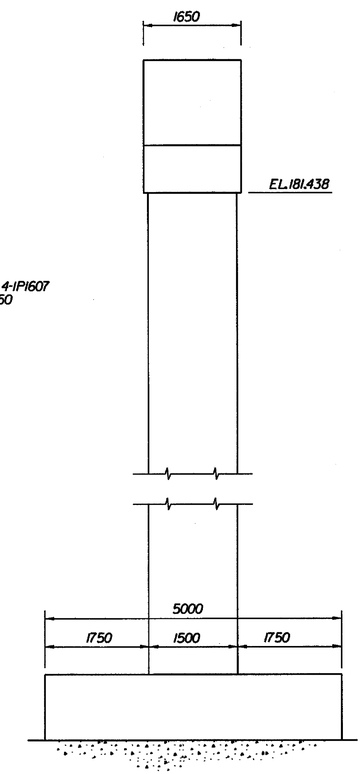

END ELEVATION

1m 0 1m
1:50

NOTES:

1. ANCHOR BOLTS SHALL CLEAR ALL REINFORCING STEEL IN THE PIER CAP.
2. MECHANICAL SPLICES ARE SUBSIDIARY TO ITEM 507.15 AND SHALL CONFORM TO SECTION 713.02 OF THE STANDARD SPECIFICATIONS.

CHA CLOUGH, HARBOUR & ASSOCIATES LLP
ENGINEERS, SURVEYORS, PLANNERS & LANDSCAPE ARCHITECTS
18 WINNERS CIRCLE ALBANY, NEW YORK, 12205

STATE OF VERMONT
AGENCY OF TRANSPORTATION

Town Of	BENNINGTON	Bridge No.	BR700
		Log Sta.	
Highway No.	VT. RTE. 9	Surv. Sta.	16+800

VT. RTE. 9 OVER SILK ROAD AND WALLOOMSAC RIVER

PIER 1 PLAN AND ELEVATION

Designed By C. TUTUNJIAN	Drawn by J. HOTALING/B. WEATHERBY
Checked By D. VIENI Date 6/00	Bridge Design Supervisor M.W. OLSTAD Date 9/00
PROJECT BENNINGTON-HOOSICK	PROJECT NO. D.P.I. 0146(1) C/4
I.G.C. Info.	
Bridge Sheet No. BR750	Sheet 233 OF 385

w:\2512-15-BR700\PL_BR700-15_00\B.W./ 600mm