Metric

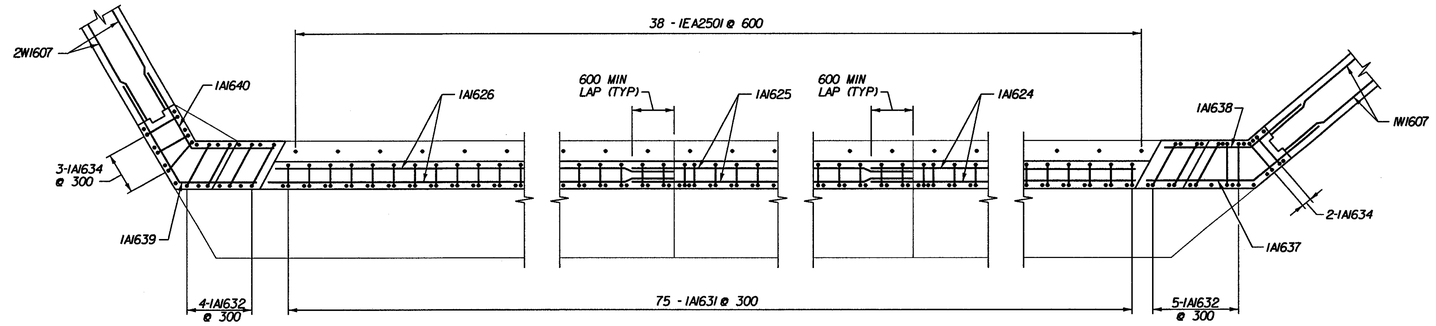

B BR741 TOP OF BACKWALL REINFORCEMENT PLAN

.8 m 0 .8 m
1:40 M-STEM

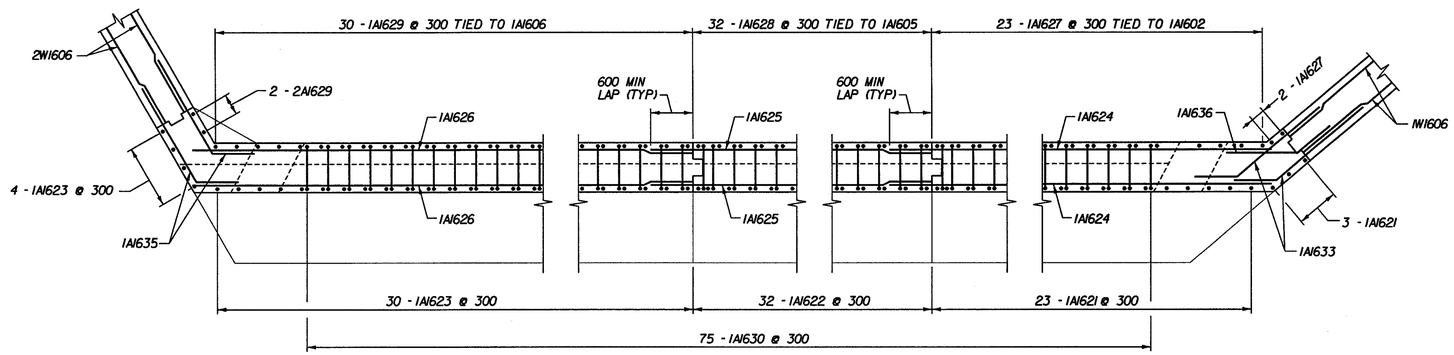

C BR741 BACKWALL REINFORCEMENT PLAN

.8 m 0 .8 m
1:40 M-STEM

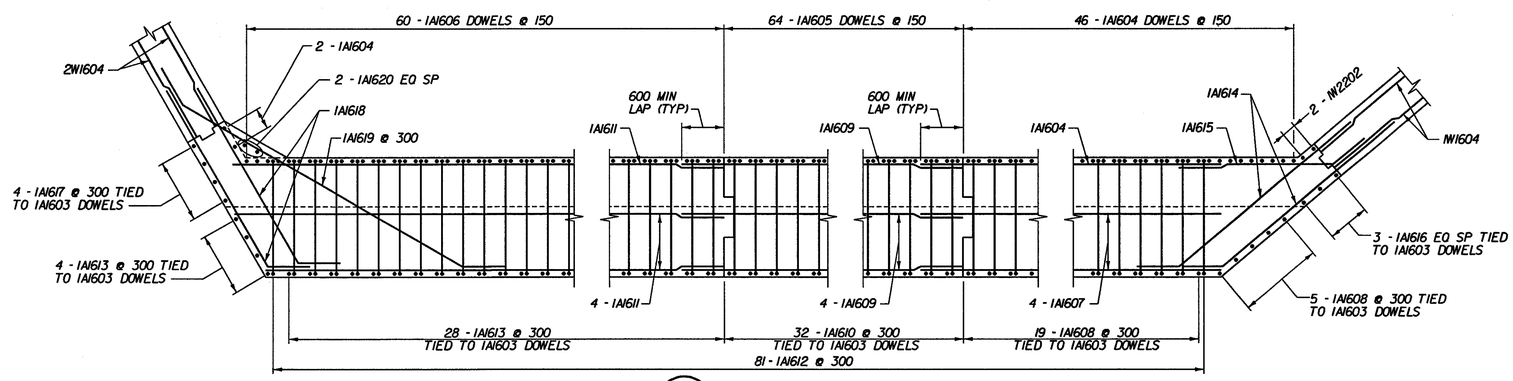

D BR741 STEM REINFORCEMENT PLAN

.8 m 0 .8 m
1:40 M-STEM

CLOUGH, HARBOUR & ASSOCIATES LLP
ENGINEERS, SURVEYORS, PLANNERS & LANDSCAPE ARCHITECTS
11 WINNERS CIRCLE ALBANY, NEW YORK, 12205

STATE OF VERMONT
AGENCY OF TRANSPORTATION

Town Of BENNINGTON	Bridge No. BR700 / Log Sta.
Highway No. VT. RTE. 9	Surv. Sta. 16+800
VT. RTE. 9 OVER SILK ROAD AND WALLOOMSAC RIVER	
ABUTMENT 1 REINFORCEMENT DETAILS - 3	
Designed By C. TUTUNJIAN	Drawn by J. HOTALING/B. WEATHERBY
Checked By L. AVERY Date 6/00	Bridge Design Supervisor M.W. OLSTAD Date 9/00
PROJECT BENNINGTON-HOOSICK	PROJECT NO. D.P.I. 014601 C/4
I.G.C. Info.	
Bridge Sheet No. BR744	Sheet 227 OF 385

F:/3513/15/BR700/ABUT3513/0JL99/BW 1W0mm