Metric

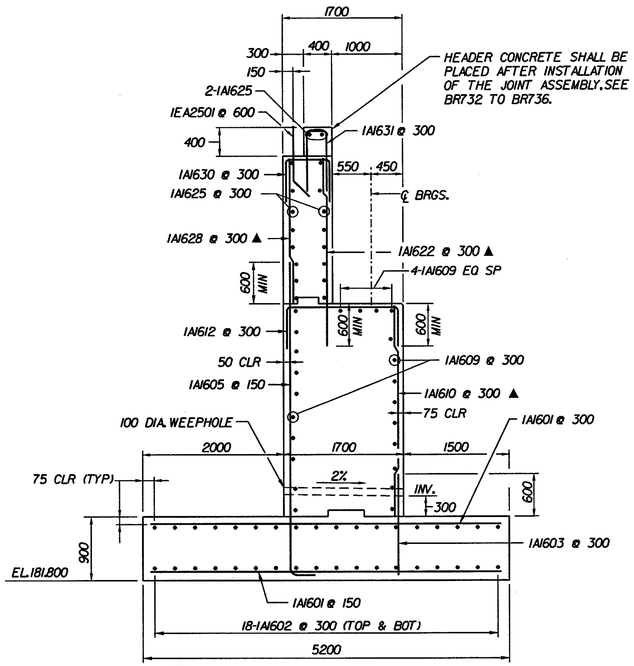

A BR741 **TYPICAL SECTION - ABUTMENT 1**

.8 m 0 .8 m

1:40

A1 SECT

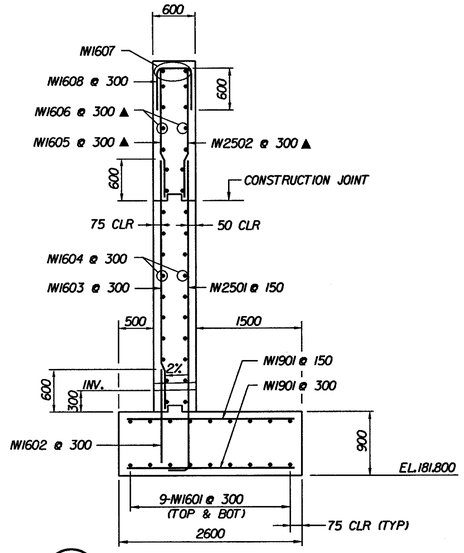

E BR743 **TYPICAL WINGWALL SECTION (WW 1 SHOWN, WW 2 SIMILAR)**

.8 m 0 .8 m

1:40

A8T1 WSC

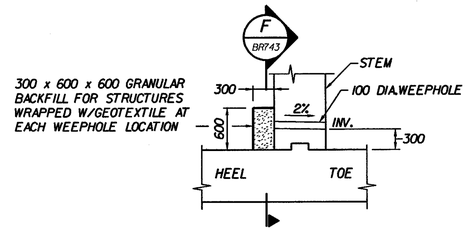

WEEPHOLE DETAIL

.8 m 0 .8 m

1:40

A1 - WEEP

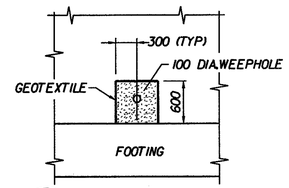

F BR743 **WEEPHOLE SECTION**

.8 m 0 .8 m

1:40

A1 - WEEP

NOTE:
THIS WILL BE PAID FOR UNDER THE "GRANULAR BACKFILL FOR STRUCTURES" ITEM 204.30.

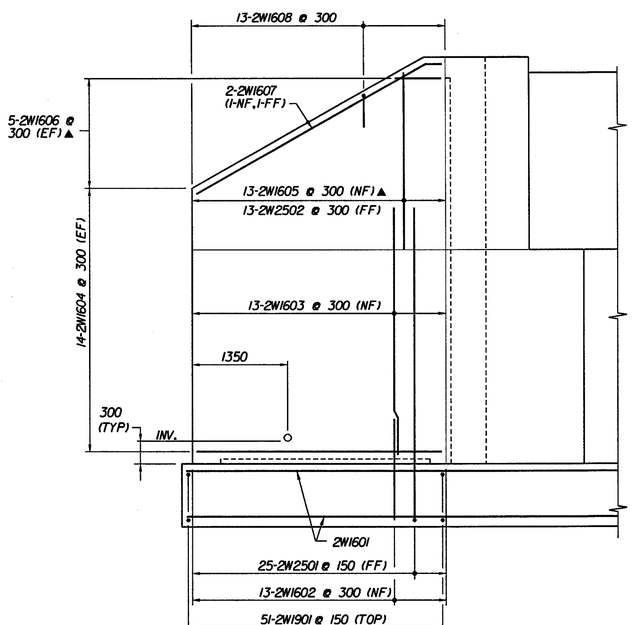

WINGWALL 2

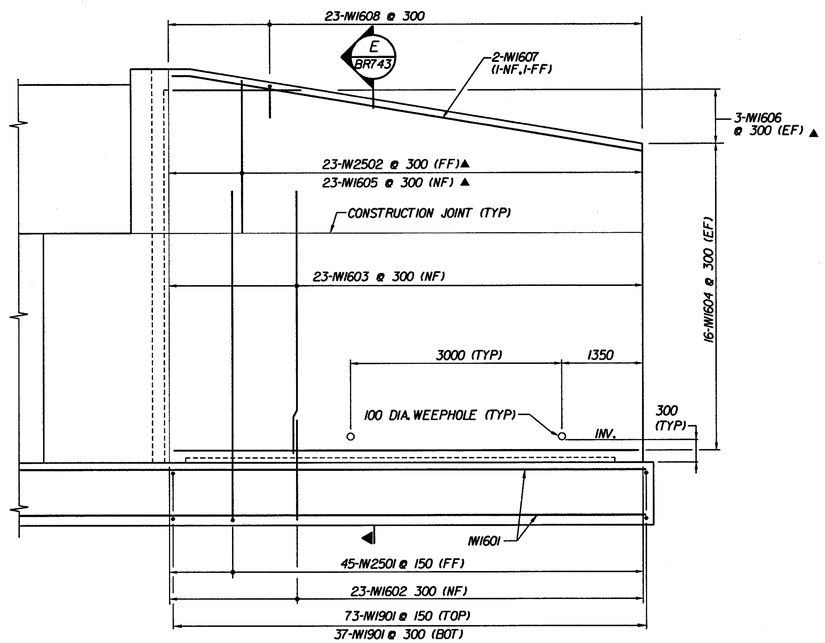

WINGWALL 1

ABUTMENT 1 WINGWALL REINFORCEMENT ELEVATIONS

.8 m 0 .8 m

1:40

A8T1 WW

NOTES:
1. NF - DENOTES NEAR FACE
2. FF - DENOTES FAR FACE
3. EF - DENOTES EACH FACE
4. ▲ INDICATES BAR TO BE CUT IN FIELD.

CLOUGH, HARBOUR & ASSOCIATES LLP
ENGINEERS, SURVEYORS, PLANNERS & LANDSCAPE ARCHITECTS
18 WINNERS CIRCLE ALBANY, NEW YORK, 12205

STATE OF VERMONT
AGENCY OF TRANSPORTATION

Town Of BENNINGTON	Bridge No. BR700
Highway No. VT. RTE. 9	Log Sta. / Surv. Sta. 16+800
VT. RTE. 9 OVER SILK ROAD AND WALLOOMSAC RIVER	
ABUTMENT 1 REINFORCEMENT DETAILS - 2	
Designed By C. TUTUNJIAN	Drawn by J. HOTALING/B. WEATHERBY
Checked By L. AVERY Date 6/00	Bridge Design Supervisor M.W. OLSTAD Date 9/00
PROJECT BENNINGTON-HOOSICK	PROJECT NO. D.P.I. 014601 C/4
I.G.C. Info.	
Bridge Sheet No. BR743	Sheet 226 OF 385

LW/3513/5/BR700/ABUTS#2/BW/JL2000/ 140