Metric

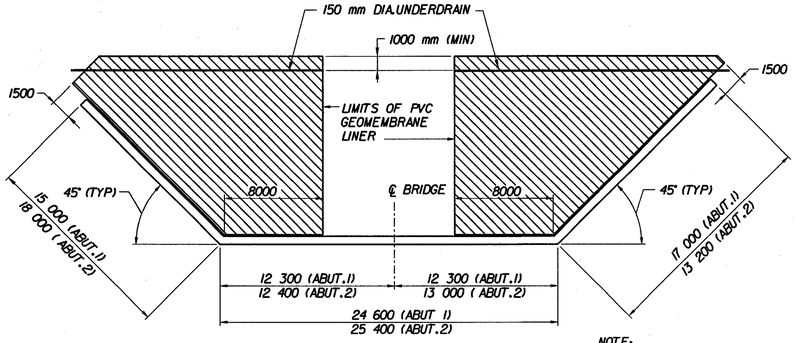

MSE WALL SCHEMATIC PLAN AT ABUTMENTS

NOTE:
PVC GEOMEMBRANE SHALL EXTEND 1500 mm MIN. BEYOND LIMITS OF MSE WALL REINFORCEMENT, AND SHALL EXTEND 2000 mm UNDER ABUTMENT STRUCTURE.

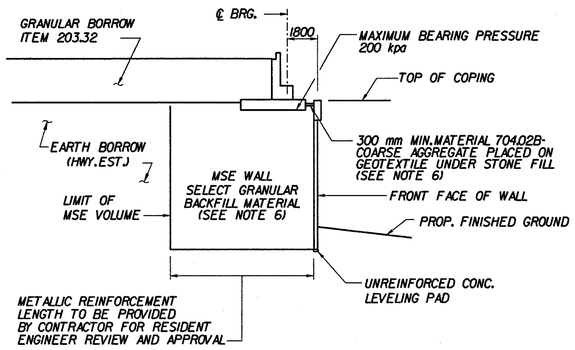

TYPICAL SECTION THRU ABUTMENT

1m 0 1m
1:5

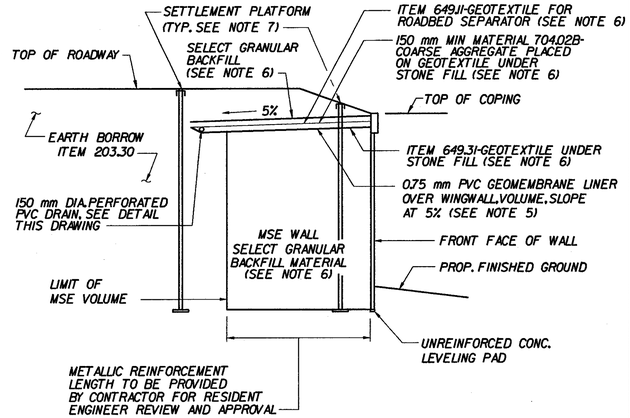

TYPICAL SECTION THRU WINGWALL

1m 0 1m
1:5

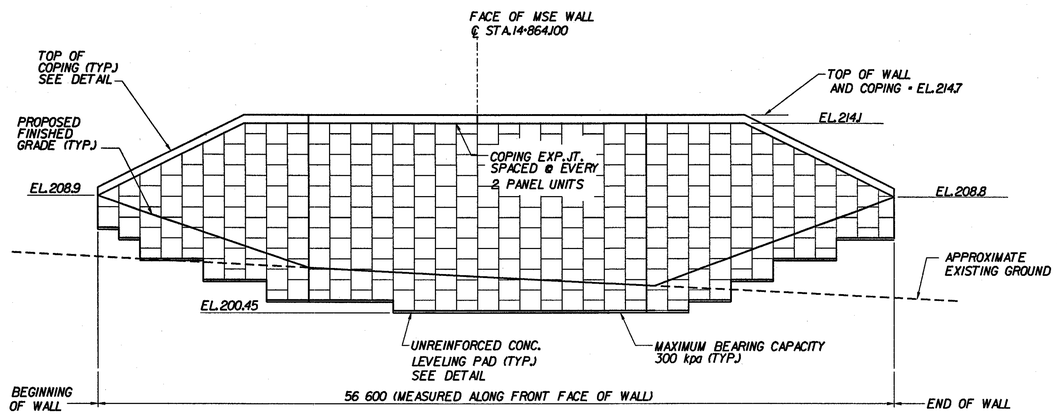

ABUTMENT 1 PANEL LAYOUT

4m 0 4m
1:200

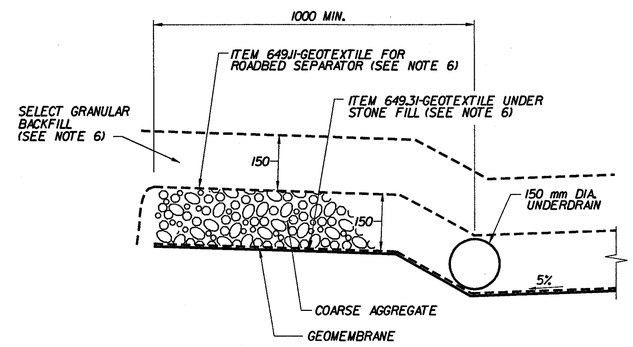

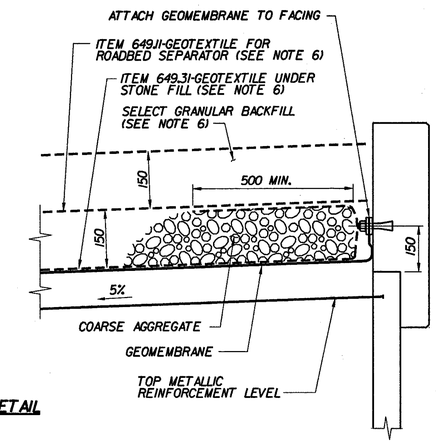

GEOMEMBRANE DETAIL

N.T.S.

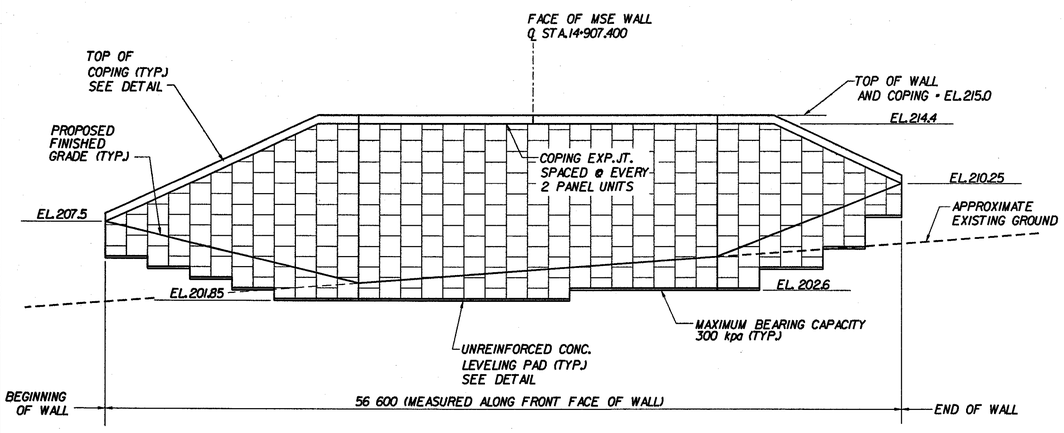

ABUTMENT 2 PANEL LAYOUT

4m 0 4m
1:200

NOTES:

1. LENGTH OF LEVELING PAD IS BASED ON INDIVIDUAL PANEL WIDTHS. ℄ OF PIN TO ℄ OF PIN. USE STEP DETAIL ON SHEET BR530 TO DETERMINE THE ACTUAL LEVELING PAD STEP LOCATION.
2. FOR COPING DETAILS, SEE SHEET BR530 WALL ELEVATIONS APPLIED AT TOP OF COPING.
3. FOR MSE WALL NOTES, SEE SHEET BR528.
4. FOR WALL LOCATION, AND TYPICAL SECTION THRU ROADWAY, SEE SHEET BR501.
5. GEOTEXTILE FOR ROADBED SEPARATOR, GEOTEXTILE UNDER STONE FILL, PVC GEOMEMBRANE, AND COARSE AGGREGATE SHALL BE INSTALLED AT A LIMIT 8 m FROM THE BENT POINT IN THE MSE WALL TOWARDS THE ℄ OF HIGHWAY TO THE LIMITS OF THE MSE WINGWALL. SEE MSE WALL SCHEMATIC PLAN.
6. THE COST OF FURNISHING THESE ITEMS SHALL BE IN THE SQUARE METER COST FOR ITEM 526.30 MECHANICALLY STABILIZED EARTH (MSE) WALL WITH ASHLAR STONE WALL PANEL FACING (MOD.2).
7. CONTRACTOR SHALL COORDINATE CONSTRUCTION OF TYPE 1 SETTLEMENT PLATFORM WITH MSE WALL CONSTRUCTION. INSTRUMENTATION WILL BE PAID FOR UNDER ITEM 623.21-TYPE 1 SETTLEMENT PLATFORM. SEE SHEET BR500 FOR LOCATIONS OF TYPE 1 SETTLEMENT PLATFORMS.

CLOUGH, HARBOUR & ASSOCIATES LLP
ENGINEERS, SURVEYORS, PLANNERS & LANDSCAPE ARCHITECTS
11 WINNERS CIRCLE ALBANY, NEW YORK, 12205

STATE OF VERMONT
AGENCY OF TRANSPORTATION

Town Of	BENNINGTON	Bridge No.	BR500
		Log Sta.	
Highway No.	VT. RTE. 9	Surv. Sta.	14+900

VT. RTE. 9 OVER AIRPORT BROOK EAST

MSE WALLS - PLAN AND SECTIONS

Designed By W. HARRIS	Drawn by M. CUEVAS/B. WEATHERBY
Checked By M. QUINN Date 11/01	Bridge Design Supervisor M. OLSTAD Date 11/01
PROJECT BENNINGTON-HOOSICK	PROJECT NO. D.P.I. 0146(1)
I.G.C. Info.	
Bridge Sheet No. BR529	Sheet 259 OF 473

FILE NAME =u:\35730\B\br500\2-abut.PLT
DATE/TIME = 9/17/2001
USER = 664