ITEM	NO. PIECES	SIZE	LENGTH	MARK	TYPE	A	B	C	D	E	F	G	H	J	K	L	M	R	O
			ABUTMENT 1																
1																			
2	68	16	7265	1A1601	STR														
3	47	16	4750	1A1602	STR														
4	59	16	1345	1A1603▲	STR														
5	100	16	3865	1A1604▲	2	250	3615					0							
6	48	16	2075	1A1605	17		0	1475	600										
7	51	16	2800	1A1606▲	STR														
8	9	16	8850	1A1607	STR														
9	9	16	5750	1A1608	STR														
10	17	16	6850	1A1609	STR														
11	17	16	9250	1A1610	STR														
12	6	16	3165	1A1611	16	0	0	2565	600				425		425				2990
13	6	16	3765	1A1612	16	0	0	3165	600				425		425				3590
14	6	16	2225	1A1613	16	0	0	1625	600				425		425				2050
15	48	16	1725	1A1614	17		600	525	600										
16	17	16	2495	1A1615	16	0	0	1895	600				425		425				2320
17	17	16	1895	1A1616	16	0	0	1295	600				425		425				1720
18	17	16	1900	1A1617	16	0	0	1300	600				425		425				1725
19	6	16	3325	1A1618	STR														
20	2	16	5550	1A1619	STR														
21	2	16	7950	1A1620	STR														
22	1	16	1820	1A1621	16	0	0	575	1245				880		880				1455
23	10	16	2675	1A1622	17		1050	575	1050										
24	1	16	2445	1A1623	16	0	0	575	1245				880		880				1455
25	4	16	2225	1A1624	17		900	425	900										
26	2	16	2125	1A1625	16	0	0	1150	975				690		690				1840
27	2	16	2575	1A1626	17		1050	475	1050										
28	44	16	1975	1A1627△	17		850	275	850										
29																			
30	96	19	4750	1A1901△	STR														
31																			
32	22	25	1050	1EA2501	16	0	0	750	300				210		210				960
33																			
34			**ABUTMENT 1 - WINGWALL 1**																
35																			
36	18	16	6800	1W1601	STR														
37	48 ~~28~~	16	2450	1W1602△	STR														
38	14	16	1335	1W1603	STR														
39	16	16	4275	1W1604▲	17		0	4025	250										
40	14	16	3345	1W1605▲	STR														
41	2	16	4385	1W1606	16	0	0	4135	250				110		225				4360
42	14	16	1675	1W1607	17		600	475	600										
43	12	16	3925	1W1608	STR														
44	12	16	3925	1W1609▲	STR														
45																			
46			**ABUTMENT 1 - WINGWALL 2**																
47																			
48	18	16	6800	2W1601	STR														
49	48 ~~28~~	16	2450	2W1602△	STR														
50	14	16	1335	2W1603	STR														
51	16	16	4275	2W1604▲	17		0	4025	250										
52	14	16	3345	2W1605▲	STR														
53	2	16	4385	2W1606	16	0	0	4135	250				110		225				4360
54	14	16	1675	2W1607	17		600	475	600										
55	12	16	3925	2W1608	STR														
56	12	16	3925	2W1609▲	STR														
57																			
58			**ABUTMENT 2**																
59																			
60	70	16	1335	2A1601	STR														
61	80	16	8580	2A1602	STR														
62	63	16	4500	2A1603▲	STR														
63	35	16	6975	2A1604	STR														
64	35	16	8650	2A1605	STR														
65	102	16	3060	2A1606	STR														
66	50	16	2375	2A1607	17		600	1175	600										
67	7	16	7300	2A1608	STR														
68	16	16	5225	2A1609	14	0	600	4025	600	0			580		155	155	580		4760
69	32	16	3020	2A1610	16	0	0	2420	600				580		155				2575
70	32	16	3535	2A1611	16	0	0	2935	600				425		425				3360
71	16	16	2425	2A1612	16	0	0	1825	600				425		425				2250
72	48	16	2930	2A1613	1	0	2755					175		130					
73	51	16	2050	2A1614▲	STR														
74	15	16	7085	2A1615	STR														
75	15	16	9275	2A1616	STR														
76	51	16	1675	2A1617	17		600	475	600										
77	14	16	2160	2A1618	16	0	0	1560	600				580		155				1715
78	14	16	2525	2A1619	16	0	0	1925	600				425		425				2350
79	7	16	1800	2A1620	16	0	0	1200	600				425		425				1625
80	4	16	3435	2A1621	17		1480	475	1480										

A.O.B.E. CHANGED TO EPOXY COATED

ORIGINAL DID NOT INCLUDE STEP FOOTING (TANSIVERSE FACE)

DECK BARS 148

ITEM	NO. PIECES	SIZE	LENGTH	MARK	TYPE	A	B	C	D	E	F	G	H	J	K	L	M	R	O
81			**ABUTMENT 2 (CONTINUED)**																
82																			
83	3	16	2500	2A1622	16	0	0	1550	950				915		245				2465
84	5	16	2250	2A1623△	16	0	0	1150	1100				1052		287				1787
85	5	16	3470	2A1624	STR														
86	3	16	2195	2A1625	16	0	0	1320	875				620		620				1940
87	3	16	2160	2A1626	16	0	0	1070	1090				771		771				1891
88	6	16	1350	2A1627	STR														
89	4	16	3235	2A1628	17		1480	275	1480										
90	332	19	5550	2A1901	STR														
91																			
92	102	25	3800	2A2501	17		0	3375	425										
93	24	25	1050	2EA2502△	16	0	0	750	300				210		210				960
94																			
95			**ABUTMENT 2 - WINGWALL 3**																
96																			
97	12	16	1335	3W1601	STR														
98	34	16	5535	3W1602	STR														
99	12	16	5040	3W1603	STR														
100	38	16	3235	3W1604	STR														
101	14	16	2865△	3W1605▲	STR														
102	14	16	3465	3W1606▲	STR														
103	16	16	3235	3W1607▲	STR														
104	2	16	3840	3W1608	STR														
105	12	16	1675	3W1609	17		600	475	600										
106	~~86~~ 83	29	4650	3W2901▲	STR														
107	26	29	5535	3W2902△	17		0	5060	475										
108			**GRADE BEAM**																
109																			
110	28	16	3850	~~IGB1601~~ EGB1601	STR														
111	28	16	3800	~~IGB1602~~ EGB1602	T2	75	475	1350	475	1350		75							
112			**ABUTMENT 2 - WINGWALL 4**																
113																			
114	38	16	1335	4W1601	STR														
115	34	16	6210	4W1602	STR														
116	10	16	5040	4W1603	STR														
117	52	16	3630	4W1604▲	STR														
118	22	16	4100	4W1605	17		600	2900	600										
119	~~28~~ 44	16	3050	4W1606	STR														
120	12	16	3465	4W1607▲	STR														
121	10	16	2865	4W1608▲	STR														
122	~~24~~ 2	16	3660	4W1609	STR														
123	40	16	1675	4W1610△	17		600	475	600										
124	24	16	7950	4W1611	STR														
125	56	16	3920	4W1612▲	STR														
126	28	16	8050	4W1613▲	STR														
127	~~12~~ 2	16	8175	4W1614	STR														
128																			
129	35	19	3050	4W1901△	STR														
130	28	19	2275	4W1902	17		0	1975	300										
131																			
132	86	29	4650	4W2901	STR														
133	22	29	5535	4W2902	17		0	5060	475										
~~134~~	47	16	1.640	ES1604		BARS WERE RECORDED AS PWER LETTER 6/17/03 CHA													
135			**DECK SLAB**																
136																			
137	574	16	14 560	ES1601	STR														
138	524	16	1910	ES1602	S5	250	445	520	445			250							
139	47	16	1770	ES1603	S5	250	225	820	225			250							
140	47	16	1660	ES1604	S5	250	225	710	225			250							
141	16	16	2420	ES1605	STR														
142																			
143	283	19	~~10 360~~	ES1901	STR	10.32													
144	283	19	~~4360~~	ES1902	STR	4.32													
145	283	19	~~5860~~	ES1903	STR	5.82													
146	283	19	~~8510~~	ES1904	STR	8.82													
147	524	16	1.765	ES1602		BARS WERE RECORDED AS PWER LETTER 6/17/03 CHA													
148			**ABUTMENT 1 COPING**																
149	107	13	1000	1EC1301△	17		500	200	300										
150	72	13	2900	1EC1302	STR														
151			**APPROACH SLAB 1**																
152																			
153	40	16	6675	1EAS1601	STR														
154	55	29	6230	1EAS2901△	1	385	5845					0		300					
155																			
156																			
157			**APPROACH SLAB 2**																
158																			
159																			
160																			
161	40	16	6675	2EAS1601	STR														
162	53	29	6230	2EAS2901	1	385	5845					0		300					

CHANGE TO EPOXY COATED BAR AS PER RESIDENT ENGINEER

BAR LENGTH WAS CHANGED AS PER LETTER DATED 5/8/03 FROM CHA

Metric

1. UNLESS OTHERWISE DESIGNATED, ALL BAR REINFORCEMENT FOR CONCRETE IN SIZES UP TO AND INCLUDING #57M SHALL CONFORM TO THE REQUIREMENTS OF THE "SPECIFICATIONS FOR DEFORMED BILLET-STEEL BARS FOR CONCRETE REINFORCEMENT". AASHTO M31M (ASTM A615-S1). ALL BARS SHALL BE GRADE 420, UNLESS OTHERWISE NOTED.
2. FOR TYPICAL BAR BENDING DETAILS, RECOMMENDED PIN DIAMETER "D" OF BENDS, HOOKS AND OTHER STANDARD PRACTICE SEE CURRENT CONCRETE REINFORCING STEEL INSTITUTE "MANUAL OF STANDARD PRACTICE".
3. BARS WHICH REQUIRE MORE ACCURATE BENDING THAN STANDARD PRACTICES SHOULD HAVE LIMITS INDICATED.
4. ALL DIMENSIONS ARE OUT TO OUT OF BAR EXCEPT "A" AND "G" ON STANDARD 180° AND 135° HOOKS.
5. "J" DIMENSION ON 180° HOOKS TO BE SHOWN ONLY WHERE NECESSARY TO RESTRICT HOOK SIZE. OTHERWISE STANDARD HOOKS ARE TO BE USED.
6. "H" DIMENSION ON STIRRUPS TO BE SHOWN ONLY WHEN NECESSARY TO MAINTAIN CLEARANCES.
7. WHERE SLOPE DIFFERS FROM 45° DIMENSIONS "H" AND "K" MUST BE SHOWN.

▲ - DENOTES BARS TO BE CUT IN FIELD.
* - DENOTES ONE EXTRA BAR ADDED FOR TESTING PURPOSES.
△ - DENOTES TWO EXTRA BARS ADDED FOR TESTING PURPOSES.

TYPICAL BAR BENDS

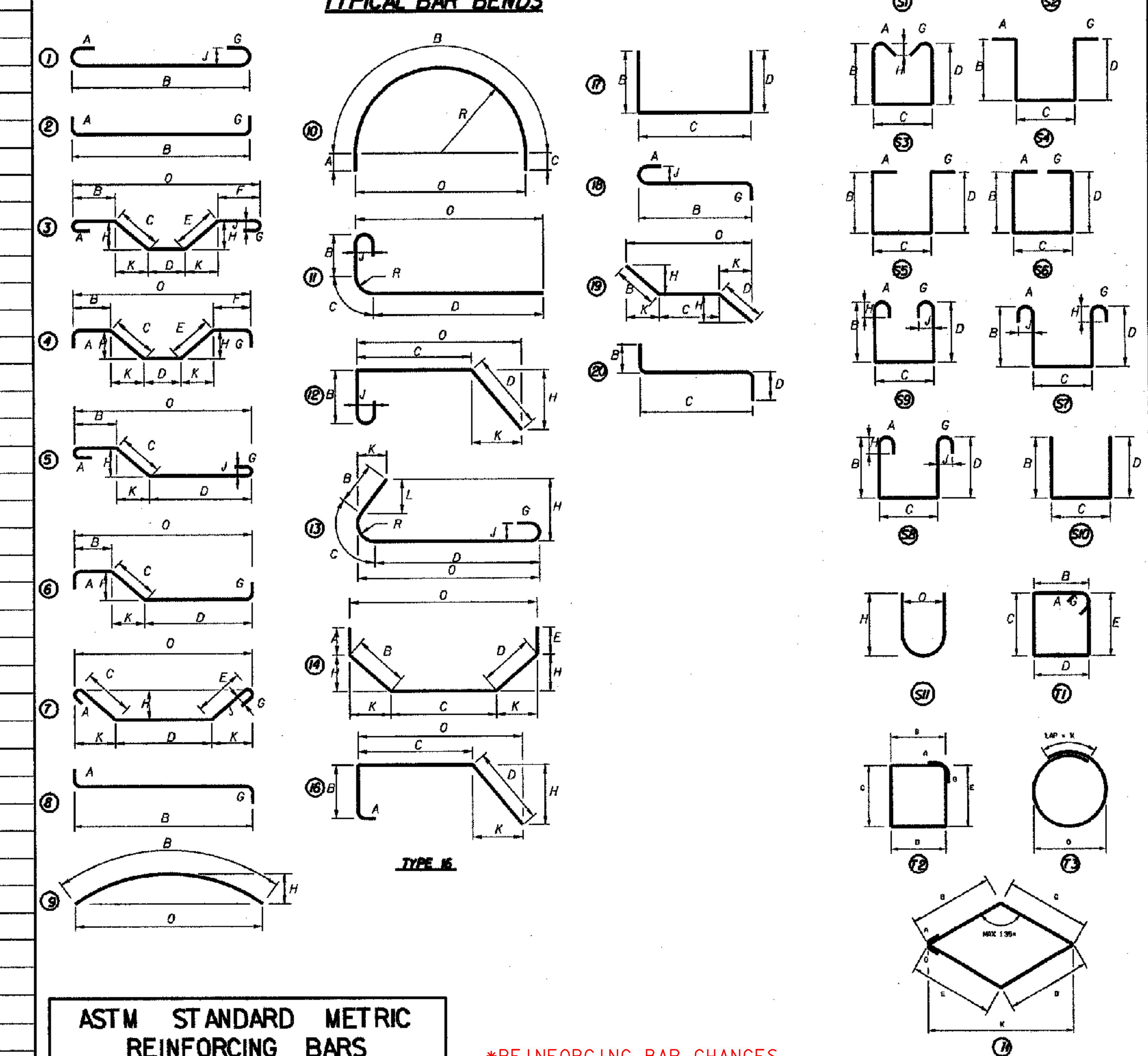

ASTM STANDARD METRIC REINFORCING BARS

BAR SIZE DESIGNATION	NOMINAL DIMENSIONS: MASS (kg/m)	DIAMETER (mm)	AREA (mm^2)
#10M	0.560	9.5	71
#13M	0.994	12.7	129
#16M	1.552	15.9	199
#19M	2.235	19.1	284
#22M	3.042	22.2	387
#25M	3.973	25.4	510
#29M	5.060	28.7	645
#32M	6.404	32.3	819
#36M	7.907	35.8	1006
#43M	11.38	43.0	1452
#57M	20.24	57.3	2581

*REINFORCING BAR CHANGES
JFW 2/2/06

CLOUGH, HARBOUR & ASSOCIATES LLP
ENGINEERS, SURVEYORS, PLANNERS & LANDSCAPE ARCHITECTS
III WINNERS CIRCLE ALBANY, NEW YORK, 12205

STATE OF VERMONT
AGENCY OF TRANSPORTATION

Town Of BENNINGTON	Bridge No. BR400
	Log Sta.
Highway No. VT. RTE. 9	Surv. Sta. 14+140

VT. RTE. 9 OVER AIRPORT BROOK WEST

REINFORCING STEEL SCHEDULE

Designed By M. COGUEN	Drawn by B. WEATHERBY
Checked By P. PERKINS Date 11/01	Bridge Design Supervisor M. OLSTAD Date 11/01
PROJECT BENNINGTON-HOOSICK	PROJECT NO. D.P.I. 0146(1)
I.G.C. Info.	
Bridge Sheet No. BR438	Sheet 227 OF 473

FILE NAME =u:\3573\15\br400\barlist1.PLT
DATE/TIME =10/12/2001
USER =664