Metric

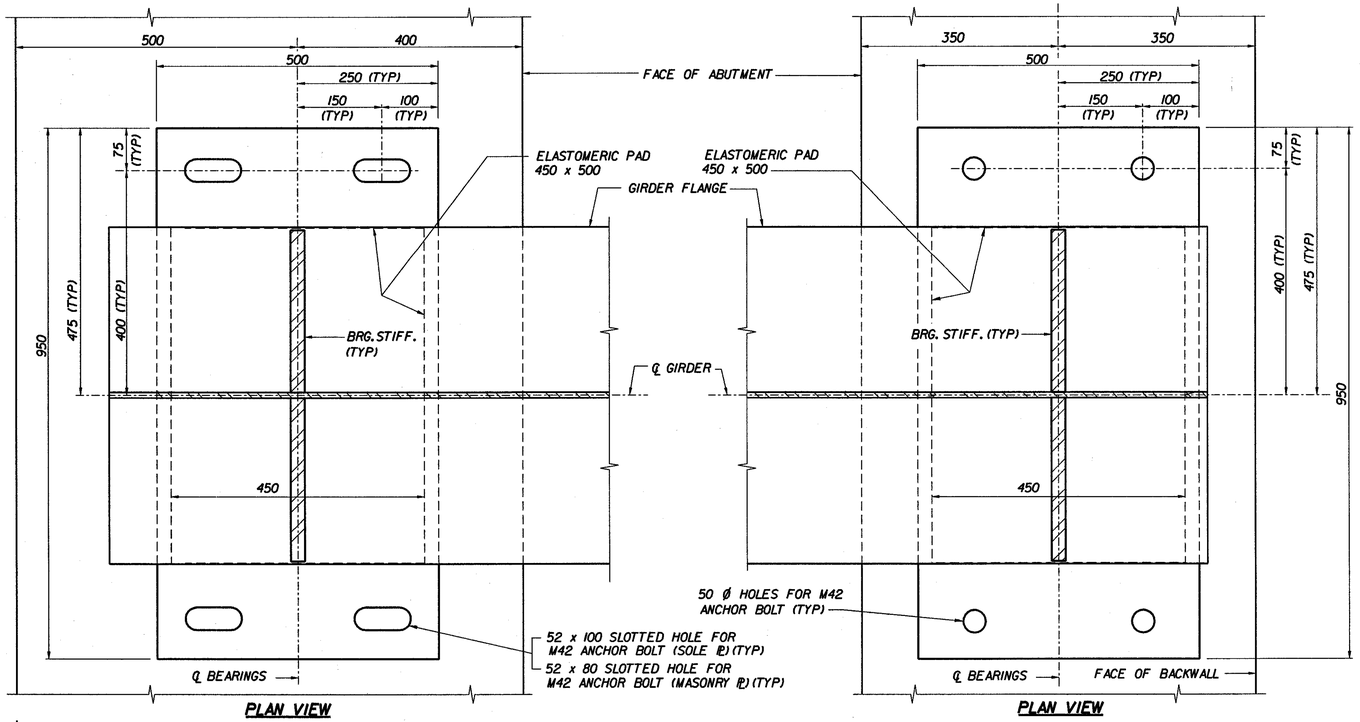

PLAN VIEW

PLAN VIEW

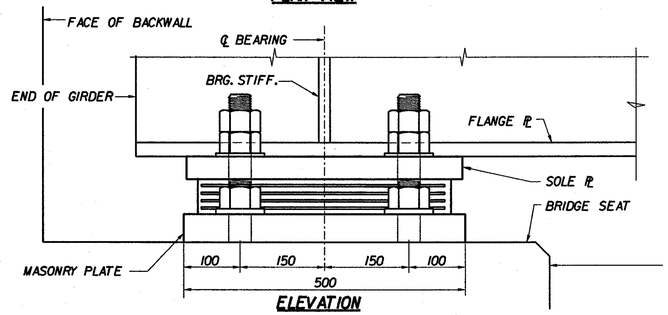

ELEVATION

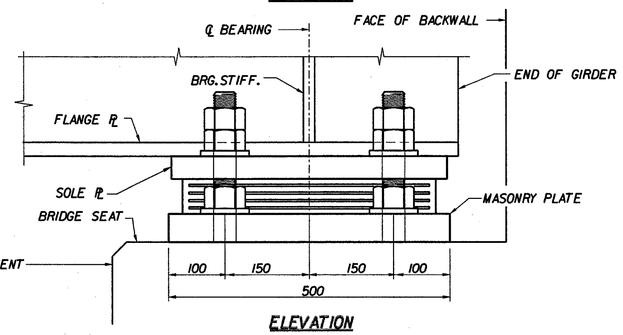

ELEVATION

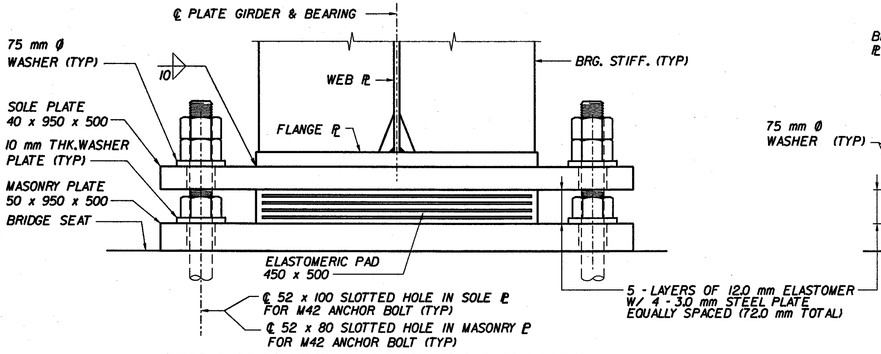

EXPANSION BEARING AT ABUTMENT 1 (FRONT VIEW)

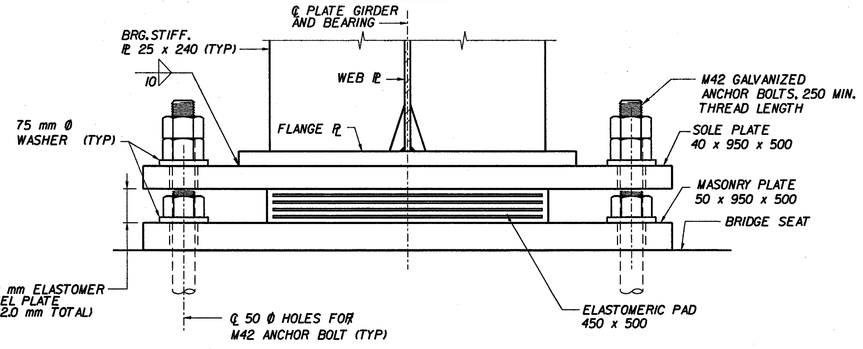

FIXED BEARING AT ABUTMENT 2 (FRONT VIEW)

BEARING DETAILS

1m 0 1m

1:5

BRGDET-1

BEARING TABLE						
LOCATION	TYPE	ITEM NO.	QUANTITY REQUIRED	CAPACITY (kN)	SHAPE FACTOR	MAX. REACTION (kN)
ABUT. 1	EXP.	531.10	5	1551	9.74	1283
ABUT. 2	FIXED	531.10	5	1551	9.74	1283

BEARING NOTES:

1. BEARING SHALL CONFORM TO REQUIREMENT OF SECTION 531. COMPONENTS SHALL CONFORM TO DESIGN, FABRICATION AND MATERIAL REQUIREMENTS OF THE APPLICABLE SUBSECTIONS OF SECTION 731- BEARING PADS FOR STRUCTURES.
2. BEARINGS SHALL BE PAID FOR UNDER ITEM 531.10 "BEARING DEVICE ASSEMBLY."
3. SHOP DRAWINGS CONFORMING TO SUBSECTION 531.03 SHALL BE SUBMITTED TO DALE GOZALKOWSKI, CLOUGH HARBOUR & ASSOCIATES, 111 WINNERS CIRCLE, P.O. BOX 5269, ALBANY N.Y. 12205-0269 FOR APPROVAL AND SHALL INCLUDE WELDING AND BONDING PROCEDURES. SHOP DRAWING SHALL ALSO INDICATE WHETHER BEARING COMPONENTS ARE GALVANIZED OR METALIZED. IF METALIZED IS USED, THE SHOP DRAWINGS SHALL DENOTE THE TYPE OF SEAL COATING THAT WILL BE PLACED ON THE METALIZING.
4. SOLE PLATES AND WASHERS ARE TO BE GALVANIZED OR METALIZED AS PER SUBSECTION 506.15 (a) OR (b) OF THE STANDARD SPECIFICATIONS.
5. THE WELD BETWEEN THE SOLE PLATE AND BOTTOM FLANGE SHALL BE SMAW 80.18 (C3). AREAS OF GALVANIZING ON THE SOLE PLATE DESTROYED IN THE WELDING PROCESS SHALL BE PAINTED WITH AN APPROVED SEALER. REFER TO SUPPLEMENTAL SPECIFICATION 513.
6. THE CONCRETE SURFACE UNDER THE BEARING SHALL BE LEVEL.
7. ANCHOR BOLTS SHALL HAVE A 380 mm MINIMUM EMBEDMENT INTO CONCRETE. ANCHOR BOLTS, NUTS AND WASHERS SHALL CONFORM TO SECTION 714.08 OF THE STANDARD SPECIFICATIONS.
8. PLATES AND PLATE WASHERS SHALL CONFORM TO AASHTO M 270M GRADE 50.

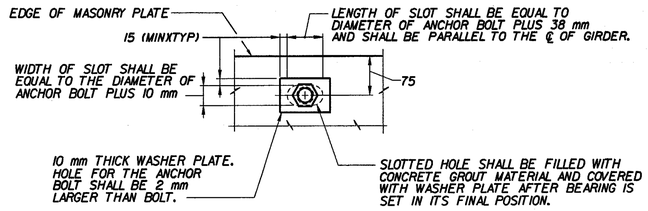

TYPICAL ANCHOR BOLT DETAIL FOR MASONRY PLATE (FOR EXPANSION BEARINGS ONLY)

2 m 0 2 m

1:10

BRGDET-4

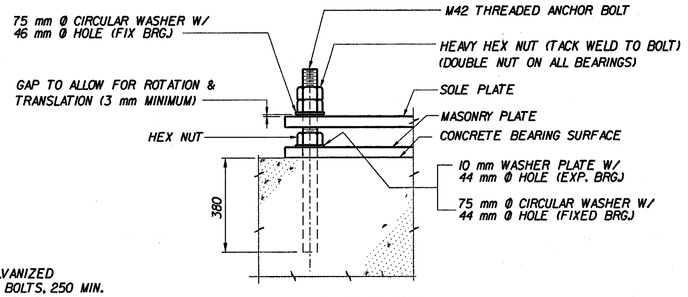

TYPICAL ANCHOR BOLT DETAIL (FOR ALL BEARINGS)

2 m 0 2 m

1:10

BRGDET-4

STATE OF VERMONT
AGENCY OF TRANSPORTATION

Town Of	BENNINGTON	Bridge No.	BR400
Highway No.	VT. RTE. 9	Log Sta.	
		Surv. Sta.	14+140

VT. RTE. 9 OVER AIRPORT BROOK WEST

ELASTOMERIC BEARING DETAILS

Designed By	M. GOGUEN	Drawn by	B. WEATHERBY
Checked By	P. PERKINS Date 11/01	Bridge Design Supervisor	M. OLSTAD Date 11/01
PROJECT	BENNINGTON-HOOSICK	PROJECT NO.	D.P.J. 0146(1)
I.G.C. Info.			
Bridge Sheet No.	BR418		Sheet 207 OF 473

CLOUGH, HARBOUR & ASSOCIATES LLP
ENGINEERS, SURVEYORS, PLANNERS & LANDSCAPE ARCHITECTS
111 WINNERS CIRCLE ALBANY, NEW YORK, 12205

FILE NAME = u:\3573\15\br-400\brgdet.PLT
DATE/TIME = 11/12/2001
USER = 6614