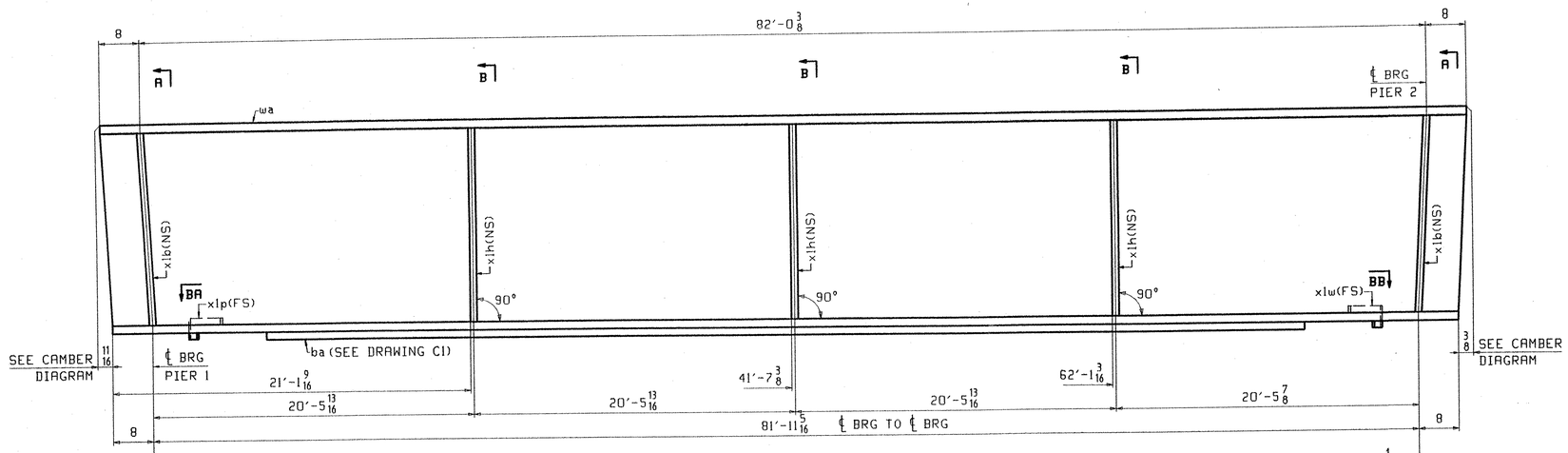

ONE - STRINGER - 4G1B

FOR STRINGER STANDARD DETAILS SEE DRAWING X1.
FOR CAMBER DIAGRAM SEE DRAWING C1.
FOR GENERAL NOTES SEE DRAWING GN1.
H2-3 DENOTES MATERIAL SUBJECT TO CHARPY V-NOTCH TESTING.

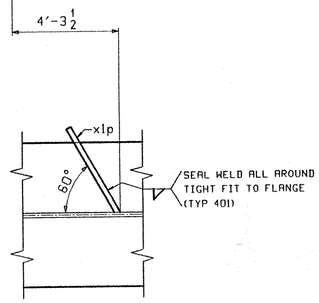

SECTION BA

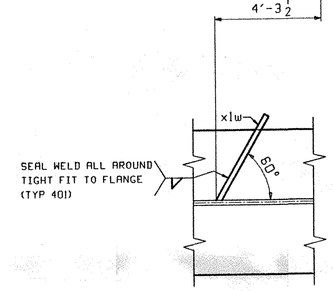

SECTION BB

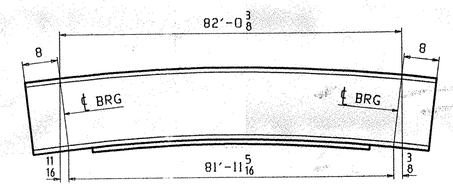

ORIENTATION DIAGRAM
SEE DWG C1

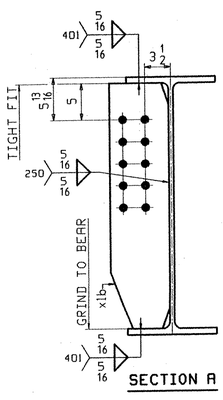

SECTION A

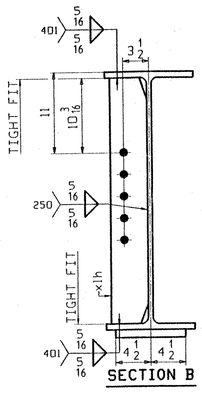

SECTION B

ABM INFO		SHIP	BILL OF MATERIAL					JOB NO.	DRAWING NO.	REV.
									4	
PAGE	LINE	MARK	QTY	MARK	MATERIAL	LENGTH FT	LENGTH INCHES	REMARKS	WT	PROCUREMENT NOTES
		4G1B	1		STRINGER				13612	
1	A		1	wa	W 36x135	83	4 3/8	(M270-50WT2) (H2-3)		
1	G		1	ba	PL 1x9	72	0	(M270-50WT2) (H2-3)		
2	G		2	x1b	PL 1/2x8	2	9 7/8	FIE		
2	C		3	x1h	PL 1/2x5	2	9 7/8			
2	N		1	x1p	PL 1/4x3	0	8 9/16			
2	N		1	x1w	PL 1/4x3	0	8 9/16			

APPROVED 4-8-04

OUT FOR APPROVAL	3-18-04									
OUT FOR APPROVAL										
ISSUED TO SHOP	4-7-04									
FIELD & OFFICE										
REV.	REMARKS	DATE	DWN	CHK	APP	Q.A.	NO.	DIA.	LGT	TYPE	WASHER

MATERIAL: M270-50W
ELECTRODES:
HOLES: 15/16" Ø
SHOP BOLTS:

SURFACE PREP. & PAINT:
SEE DRAWING GN1
ALL STEEL WITHIN 6'-0 OF PIERS 1 & 2 SHALL BE PAINTED IN ACCORDANCE WITH THE NOTES ON GN1.

DESCRIPTION: STRINGER - 4G1B
JOB: CENTER ST (ALT VT 122) OVER THE PASSUMPSIC RIVER
BRIDGE NO. 2, PROJ BHO 1447(26)
LYNDON, VT (CALEDONIA COUNTY)
CONTRACTOR: AUSTIN CONSTRUCTION
PROJ NO. BHO 1447 (26)
CUSTOMER: VERMONT A. O. T.

DRAWN BY	JTB	DATE 02/20
CHKD BY		
LF		03/15
APPROV BY		
SUPERVISOR	W. J. GATTI	
Q.A.		

TENSOR 2425
CASCO BAY STEEL STRUCTURES, INC.
75 SPRING HILL ROAD SACO, MAINE 04072
PHONE (207) 282-7360 FAX. (207) 282-1179

JOB NO. 227 DRG. NO. 4 REV. △

061 55