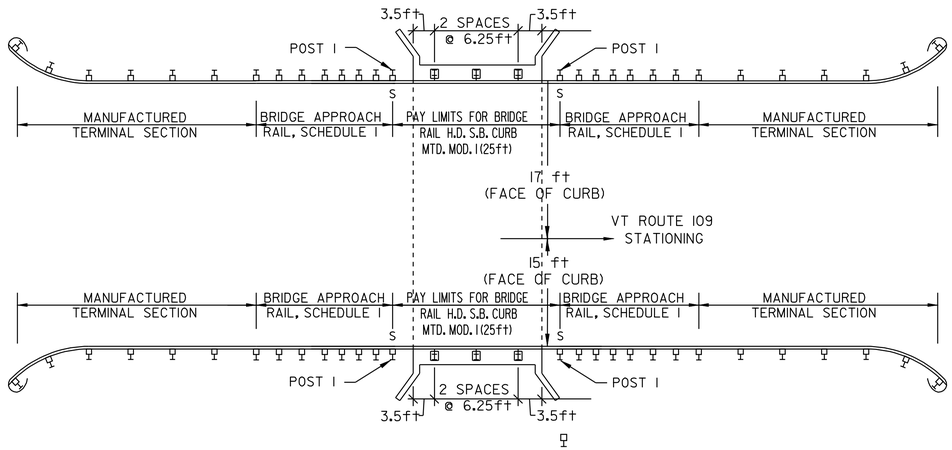

CAMBRIDGE – BRIDGE #2
STA 143+52 – MM 2.718
(FIELD MEASURED)

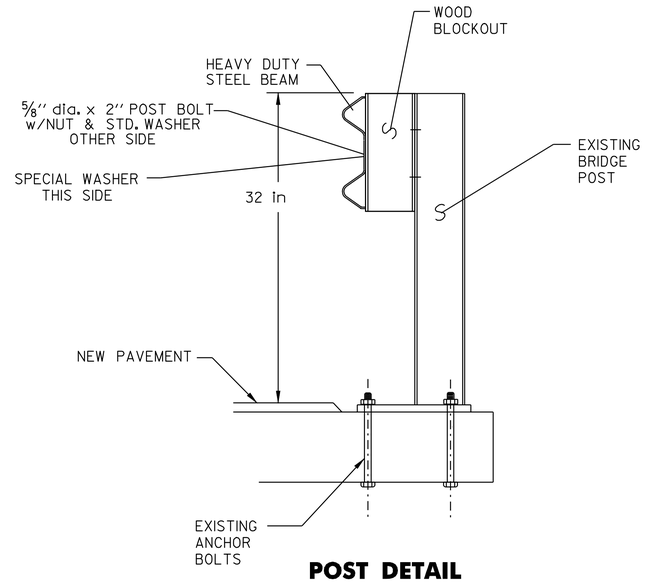

POST DETAIL

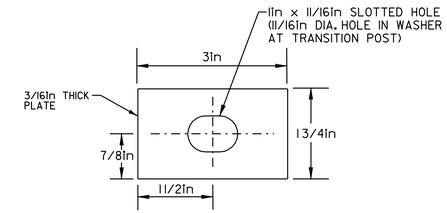

SPECIAL WASHER DETAIL
(MATERIAL SHALL MEET AASHTO M270/M270 GRADE 345W)

POST DETAILS

NOTES:

1. BOLTS, NUTS & WASHERS SHALL BE GALVANIZED AND CONFORM TO SECTION 714.05, EXCEPT THAT POST BOLTS SHALL CONFORM TO STANDARD G-1 REQUIREMENTS AND BE CORROSION RESISTANT.
2. POSTS, PLATE AND SPECIAL WASHER SHALL BE OF AASHTO M270/M270 GRADE 345W (GRADE 50W) STEEL

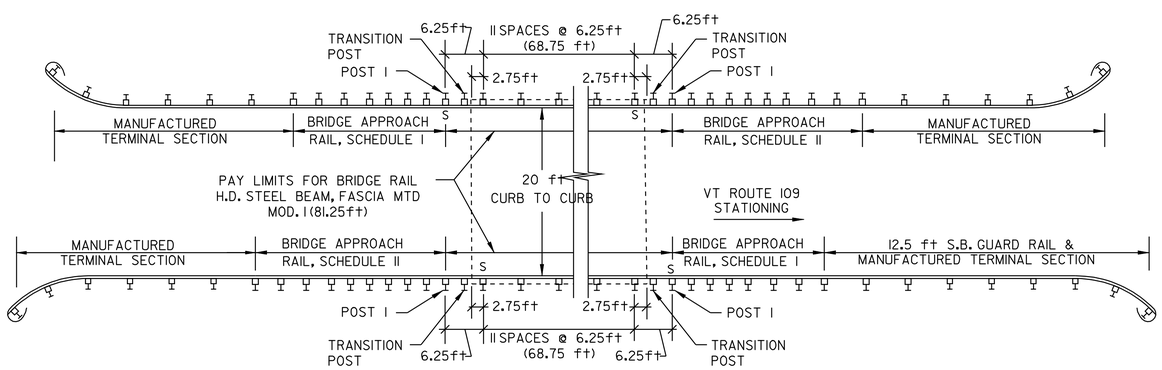

CAMBRIDGE – BRIDGE #3
STA 187+85 – MM 3.559

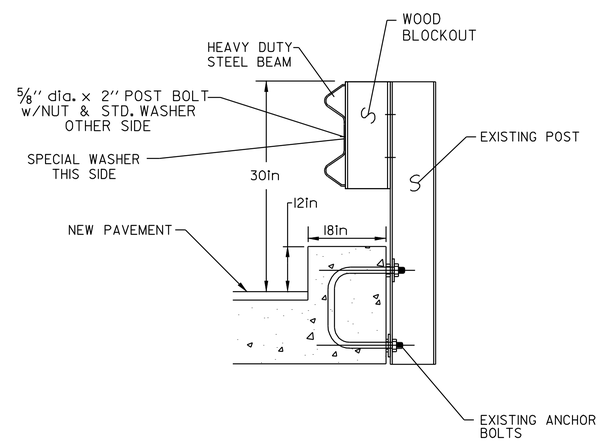

POST DETAIL

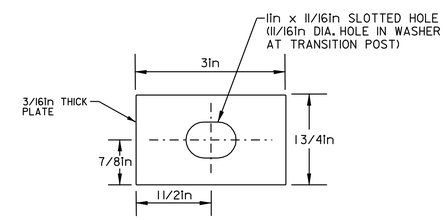

SPECIAL WASHER DETAIL
(MATERIAL SHALL MEET AASHTO M270/M270 GRADE 345W)

BRIDGE DETAIL SHEET #2

DESIGNED BY	BCE/PJM	DATE	8-05
DRAWN BY	C.E.A., INC.	DATE	8-05
DESIGN FILE NO.	p99c190.dgn		
PRF FILE	p99c190bd2.1	DATE PLOTTED	12-DEC-2008 09
PROJ. NAME	**CAMBRIDGE – BELVIDERE**		
PROJ. NO.	**STP 2219(1)S**		
SHEET	**35** OF **37** SHEETS		