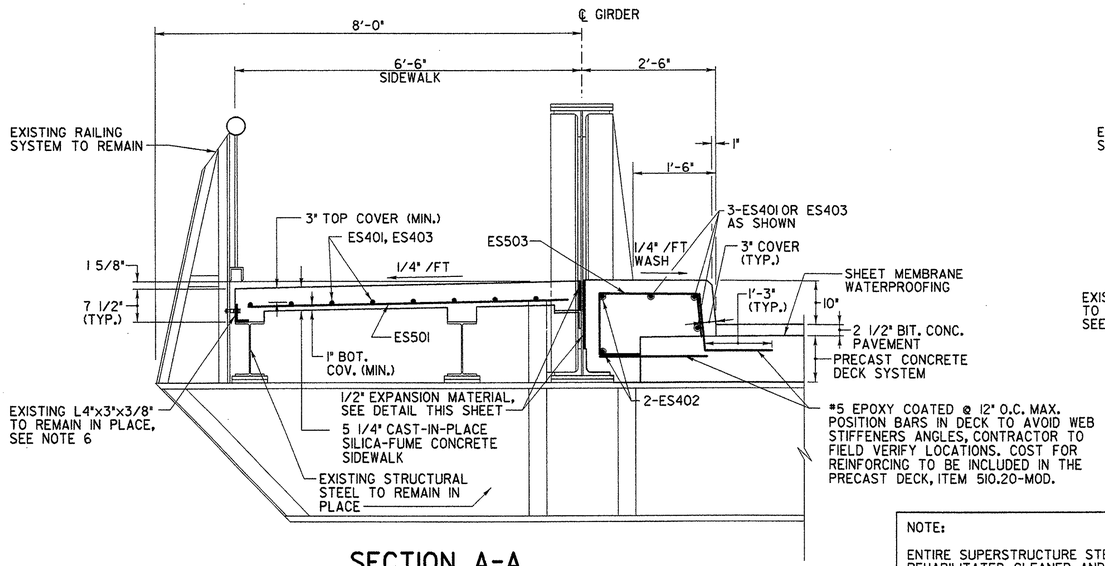

SECTION A-A

SCALE: 3/4" = 1'-0"

NOTE:

ENTIRE SUPERSTRUCTURE STEEL TO BE REHABILITATED, CLEANED AND PAINTED.

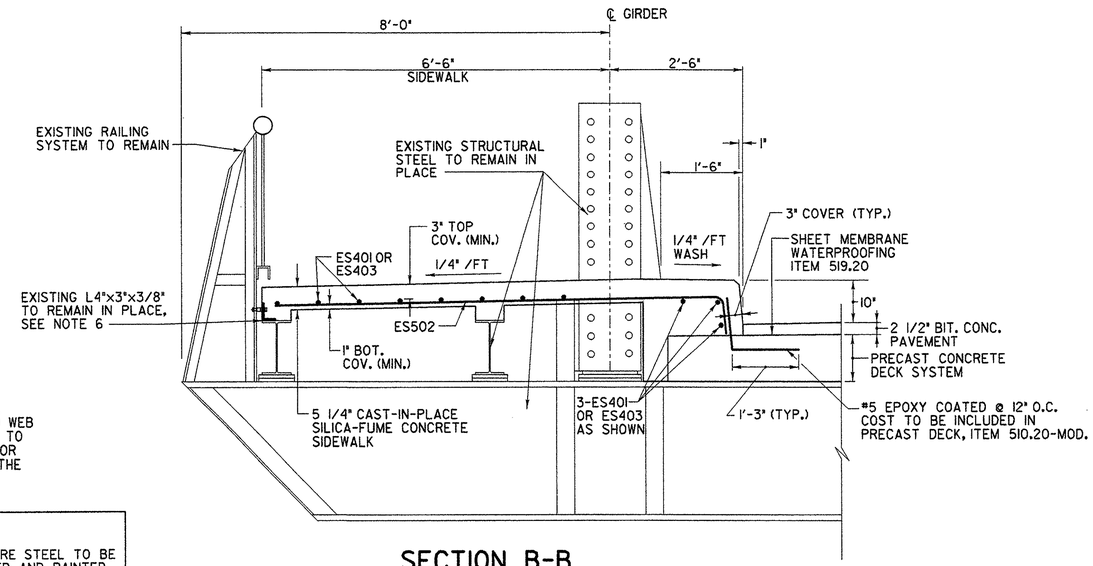

SECTION B-B

SCALE: 3/4" = 1'-0"

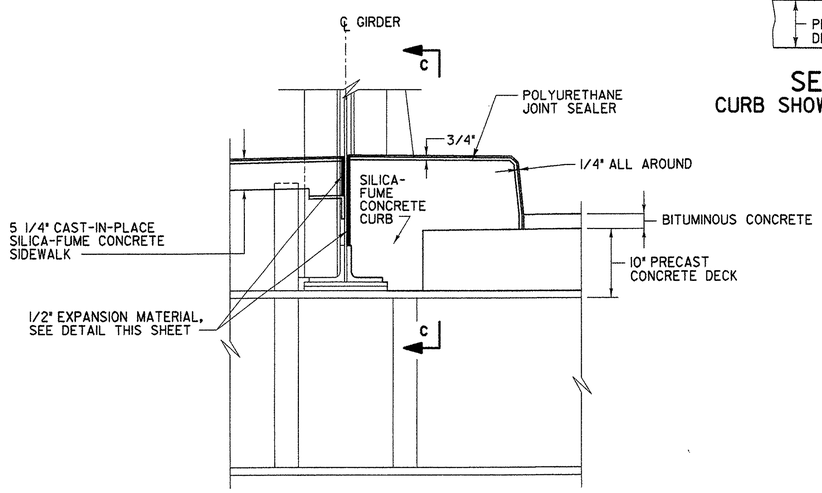

TYPICAL SECTION THROUGH SIDEWALK AND CURB CONSTRUCTION JOINT

SCALE: N.T.S.

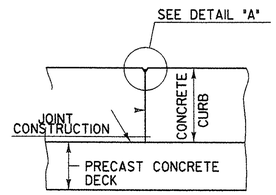

SECTION C-C

CURB SHOWN, SIDEWALK SIMILAR

SCALE: N.T.S.

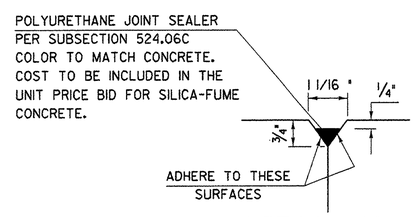

DETAIL "A"

SCALE: N.T.S.

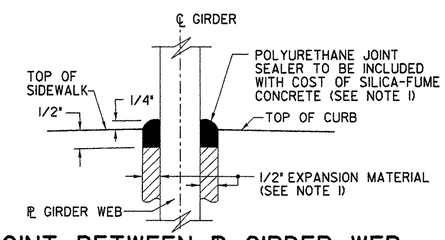

JOINT BETWEEN ℄ GIRDER WEB AND SIDEWALK / CURB

SCALE: N.T.S.

NOTES:

1. POLYURETHANE JOINT SEALER AND 1/2" EXPANSION MATERIAL SHALL BE INCLUDED IN THE UNIT PRICE PRICE BID FOR SILICA-FUME CONCRETE, ITEM 501.60.
2. SHEET MEMBRANE WATERPROOFING SHALL EXTEND TO FACE OF CURB.
3. "E" DENOTES EPOXY COATED BARS.
4. CONSTRUCTION JOINTS IN THE CURBS AND SIDEWALKS SHALL BE PROVIDED AS SHOWN ABOVE. JOINTS SHALL BE LOCATED ABOVE THE CENTERLINE OF EACH INTERIOR TRANSVERSE FLOORBEAM. CONCRETE SHALL BE PLACED IN ALTERNATING SECTIONS WITH A MINIMUM OF 48 HOURS DELAY BETWEEN ADJACENT POURS.
5. LONGITUDINAL REINFORCING SHALL PASS THROUGH CONCRETE CURB AND SIDEWALK CONSTRUCTION JOINTS.
6. IF THE EXISTING ANGLE IS SEVERELY DETERIORATED OR DAMAGED AFTER THE REMOVAL OF THE EXISTING SIDEWALK, AS DETERMINED BY THE ENGINEER, THEN MECHANICAL ANCHORS SHALL BE UTILIZED TO SECURE THE RAILING. THE EXISTING ANGLE SHALL BE REMOVED AND DISPOSED OF AT NO ADDITIONAL COST TO THE OWNER. THE NEW MECHANICAL ANCHORS SHALL HAVE A MINIMUM EMBEDMENT OF 4" AND THE COST SHALL BE INCLUDED IN THE PRICE BID FOR SILICA-FUME CONCRETE, ITEM 501.60.
7. FOR SIDEWALK AND CURB PLAN, SEE DWG. SW-1.
8. SIDEWALKS SHALL RECEIVE A BROOM FINISH SURFACE IN ACCORDANCE WITH S.S. 618.03 (d).
9. ALL NEW APPROACH AND BRIDGE SIDEWALKS SHALL HAVE WATER REPELLENT, ITEM 514.10, APPLIED TO ALL EXPOSED SURFACES.

PROJECT NO. THI-9914 BHF 1000 (17)S

Greenman-Pedersen CONSULTING ENGINEERS GPI
55 Monument Ave. Bennington, VT. 05201

BENNINGTON BRIDGE #10 (U.S. ROUTE 7) OVER THE WALLOOMSAC RIVER

SIDEWALK DETAILS 2

DRAWING NO.	SCALE:	DATE:	SHEET NO.
SW-2	AS SHOWN	DEC ., 1999	13 OF 20

IN CHARGE OF J. STEVENS
DESIGNED BY J. RIZZO
DRAFTED BY K. COLE
CHECKED BY M. BORGEL

d:\1999\99008\str\sw2.ben