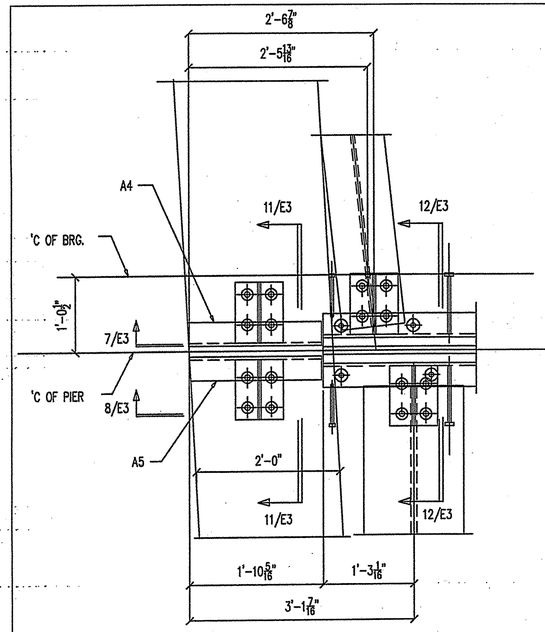

DETAIL – 5/E2

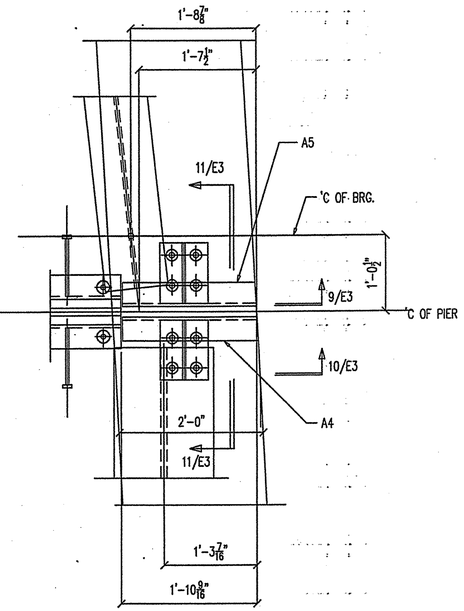

DETAIL – 6/E2

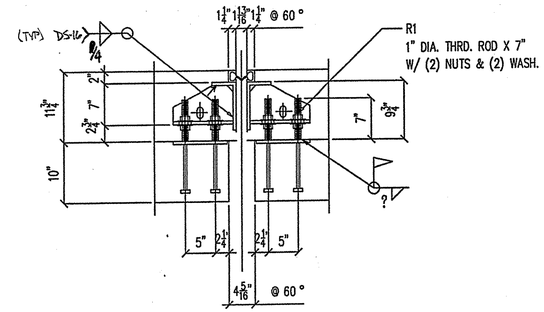

SECTION – 11/E3

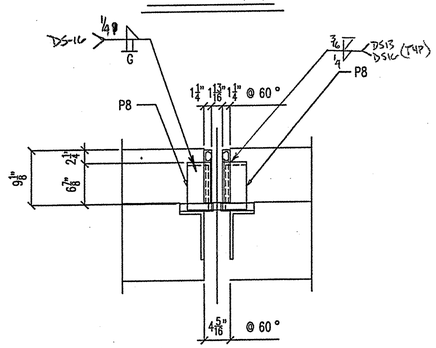

SECTION – 12/E3

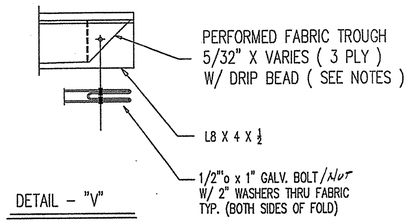

DETAIL – "V"

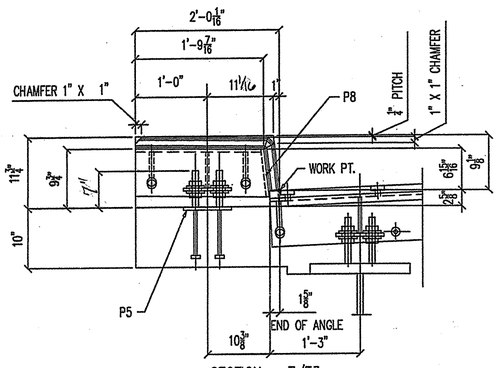

SECTION – 7/E3

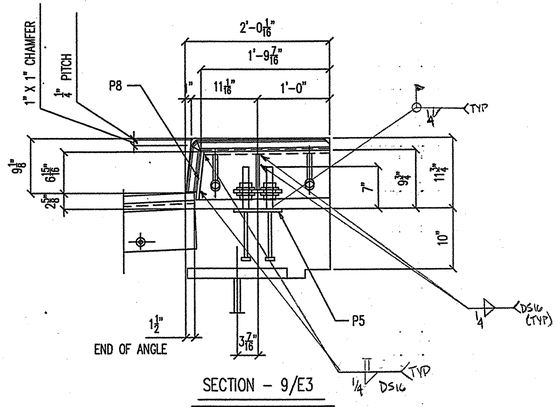

SECTION – 9/E3

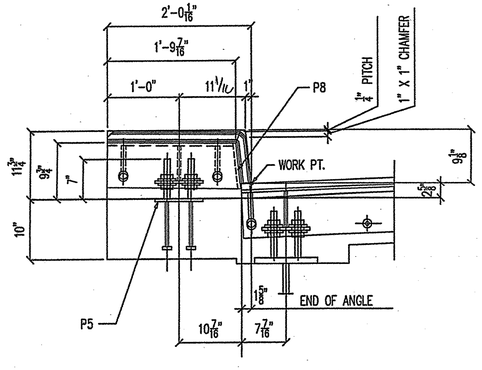

SECTION – 8/E3

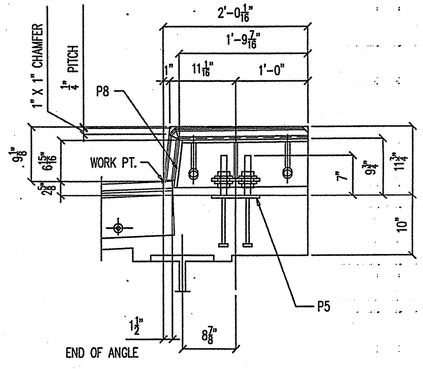

SECTION – 10/E3

NOTES:

1.) PREFORMED FABRIC MATERIAL SHALL BE CONTINUOUS AND SHALL CONFORM TO SUBSECTION 707.07.

2.) BUTYL RUBBER TAPE SHALL CONFORM TO AASHTO SPEC. M-198, TYPE B.

3.) ALL STEEL COMPONENTS SHALL BE AASHTO M270, GRADE 36, GALVANIZED OR METALIZED AS PER SUBSECTION 506.15 UNLESS NOTED OTHERWISE, EXCEPT FOR THREADED RODS AND NUTS TO BE ASTM A307.

4.) THE L8 X 4 X 1/2 ANGLES SHALL BE FURNISHED AS ONE CONTINUOUS PIECE (PER PLANS) THE 1 1/4" X 5 1/2" BARS EACH SIDE OF THE JOINT SHALLBE PROVIDED IN TWO EQUAL LENGTHS.

5.) A DRIP BEAD OF 1/4" X 7" STRIP OF PREFORMED MATERIAL SHALL BE CEMENTED TO THE BOTTOM OF THE FABRIC TROUGH USING AN ADHESIVE APPROVED BY THE MANUFACTURER. THE DRIP BEAD SHALL BE APPLIED 1" FROM THE DOWNSPOUT END OF THE TROUGH.

6.) THE EXPANSION JOINT SHALL BE SHOP ASSEMBLED AND SHIPPED AS ONE UNIT, PER PLANS

7.) ALL BOLTS, STUDS, AND RELATED HARDWARE EXCEPT AS NOTED SHALL BE ASTM A307 AND SHALL BE GALVANIZED IN ACCORDANCE WITH ASTM A153 (AASHTO M232).

RECEIVED
OK'D BY ____ OK'D BY ____
MAY 3 1 2006
RESUBMIT ____ APPROVED ____
BY RRW DATE 6/1/06

REV. NO.	DATE	DESCRIPTION
1	5/3	PER ENG.

HOLES: 13/16"0 (U.N.O.) DATE: 3-16-06
PAINT: GALVANIZED

EXPANSION JOINT (EJ-1) CURB DETAILS

DATE SUB.	PROJECT	MONTGOMERY VT. BRIDGE VT. ROUTE 118 , BRIDGE #21
	LOCATION	MONTGOMERY, VT.
	ARCHITECT	
DATE APP.	ENGINEER	STATE OF VERMONT , AGENCY OF TRANSPROTATION
DATE DIST.	CUSTOMER	A.L. ST. ONGE CONST.

MERRIMACK
MISCELLANEOUS IRON
STRUCTURAL STEEL
FABRICATORS
MERRIMACK SHEET METAL
119 HALL ST.
CONCORD, N.H., 03301
TEL. (603) 224-7766
FAX. (603) 224-7925

DR BY KJM
REV BY
JOB NO. 0770
DWG NO. 068-05 E3