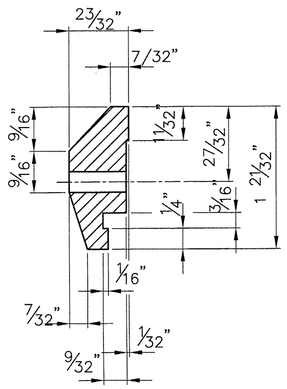

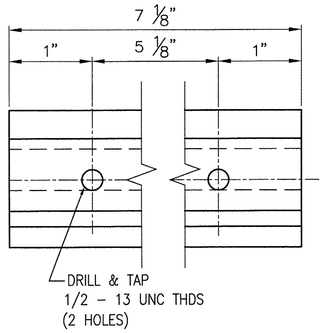

112 ~ REQ'D CLAMP
BAR CB-03-A
(BARRIER RAIL – 4 PER POST)
(#19447)

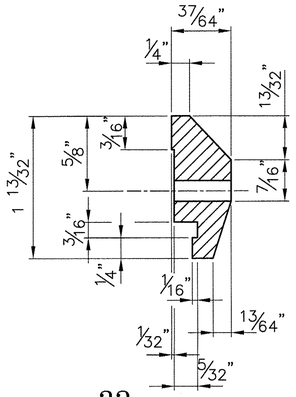

32 ~ REQ'D CLAMP
BAR CB-01-H
(HANDRAIL – 2 PER POST)
(#28596)

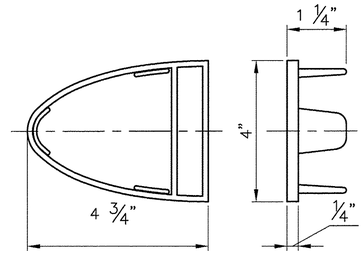

2 ~ REQ'D. ALUM
END CAPS EC2
#19345

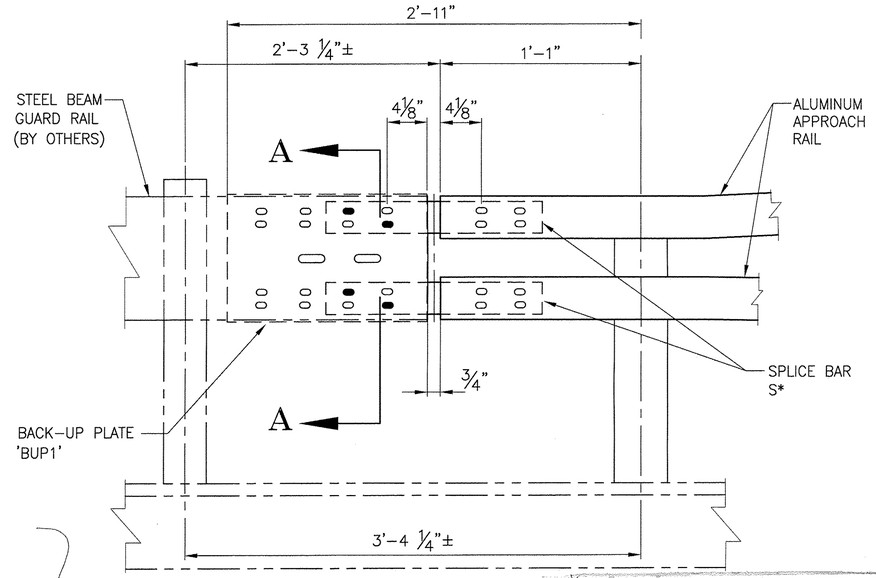

DETAIL "B"
(FRONT ELEVATION VIEW)

APPROVER,,
THERE APPEARS TO BE A DIMENSIONAL PROBLEM WITH THE STATE STD. DWGS ON THE SIDE AT THE RAIL SPLICE. THE 4 5/8" WOULD EXTEND THE PLATE BEYOND THE CENTERLINE OF THE SPLICE TOWARDS THE RAILING.
PLEASE VERIFY.

Agreed.

T-Y-LIN INTERNATIONAL

X No Exception Taken
Make Correction as Noted
Submit Specified Item
Revise and Resubmit as Noted
Rejected

Checking is for general compliance with the design concept of the project and general compliance with the information given in the contract documents only. Any action shown is not an approval and is subject to the requirements of the plans and specifications. Any action shown on a specific item shall not indicate the checking of an assembly of which the item is a component. Contractor is solely responsible for: dimensions which shall be confirmed and correlated at the job site, fabrication processes, techniques of construction, safety precautions; and coordination of its work with that of all other trades and the satisfactory performance of its work.

Reviewed By: Shanta Keller Date: 3/31/10

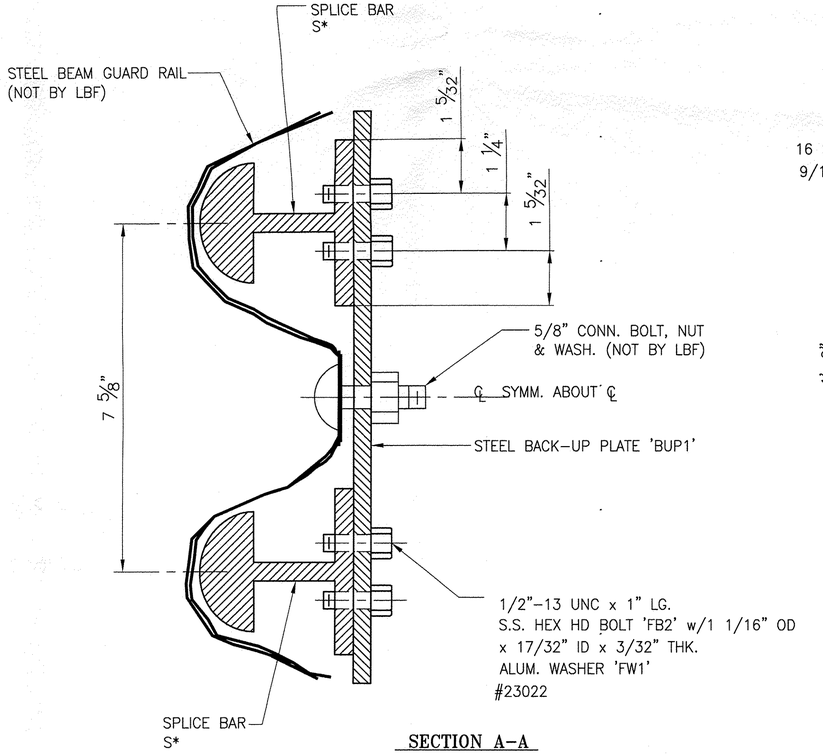

SECTION A–A

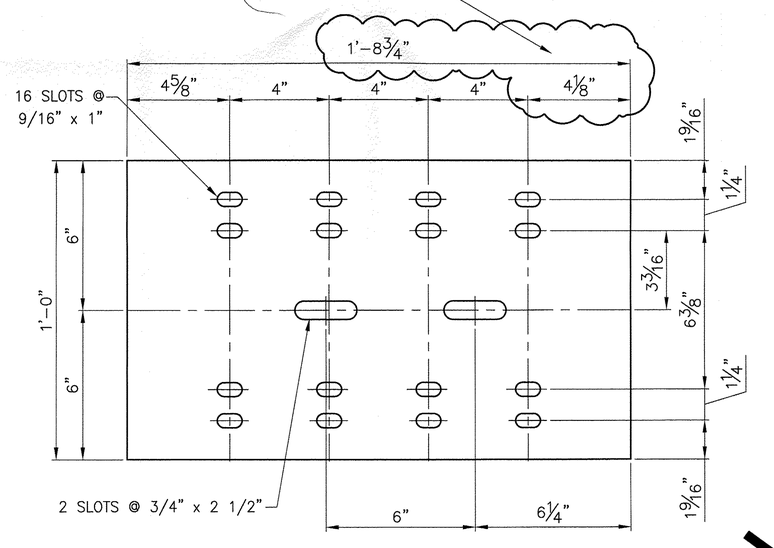

3 REQ'D. ~ BACK–UP PLATE BUP1
(1/4" THK. PLATE ~ A36 – GALV.)

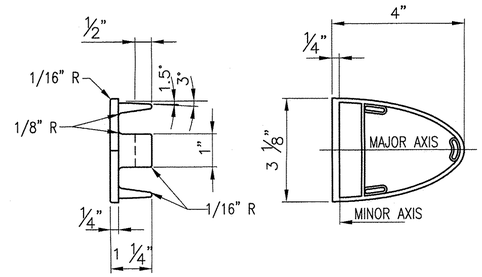

4 ~ REQ'D END CAPS (3 1/8" x 4") 'EC1'
#19344

ANODIZED
(SEE NOTES ON LB1)

REV.	DESCRIPTION	BY	DATE

BRIDGE No. 30
PROJECT No. BHF 0283 (9) S — ITEM No: 621.745

APPROVED: _____ REC'D APPROVAL _____ DRAWING _____

L.B. FOSTER COMPANY
1016 GREENTREE ROAD
PITTSBURGH, PENNSYLVANIA 15220

FOR: A.D. ROSSI CORPORATION
VERMONT AGENCY OF TRANSPORTATION
TOWN OF BERKSHIRE, COUNTY OF FRANKLIN
3–LINE SEMI–ELLIP. ALUM. APPROACH RAIL FOR VT RTE 118
3L ALUMINUM APPROACH RAIL ~ MISC DETAILS

MADE CMS DATE 02/18/10 JOB No. AR0624 CUST. No.
CHECK BLJ DATE 02/25/10 DRAWING LB16(LAST) REV. No.