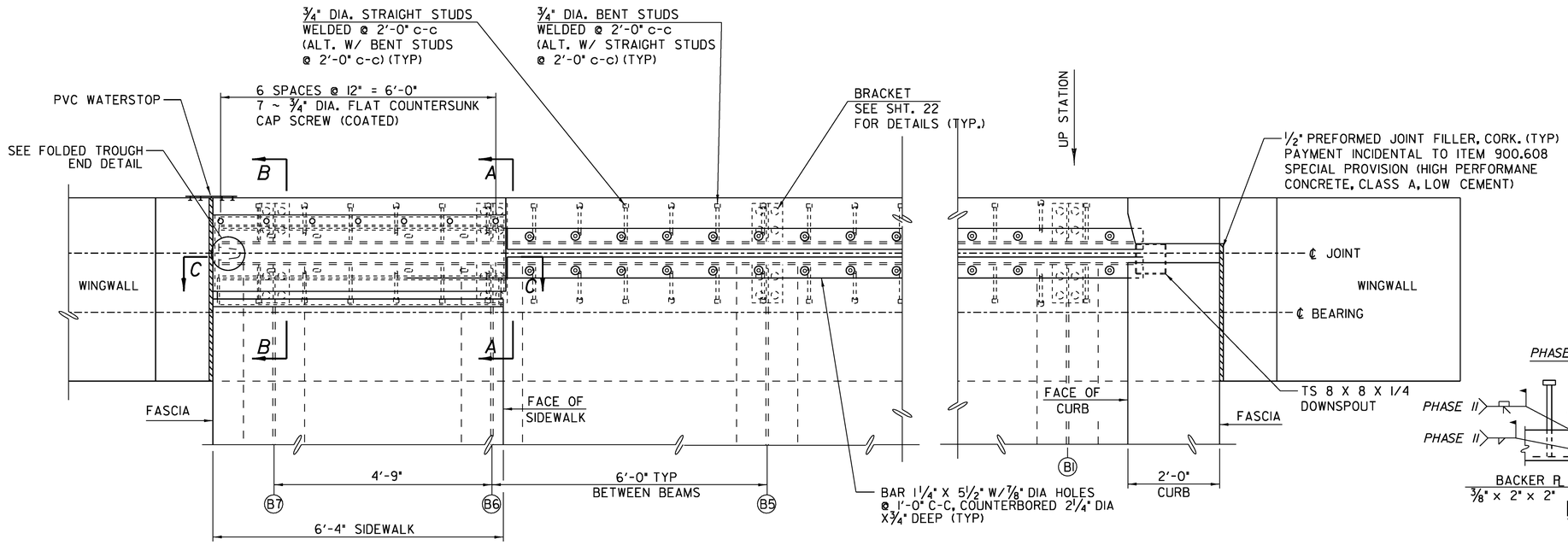

EXPANSION JOINT ABUTMENT NO. 1

SCALE: 3/4" = 1'- 0"

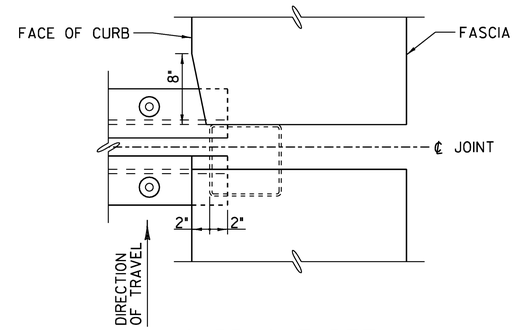

CURB CUT DETAIL

SCALE: 1 1/2" = 1'- 0"

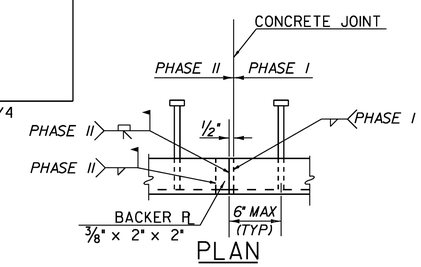

PLAN

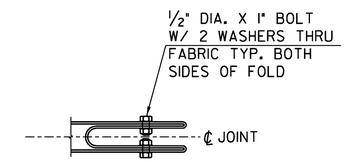

PLAN

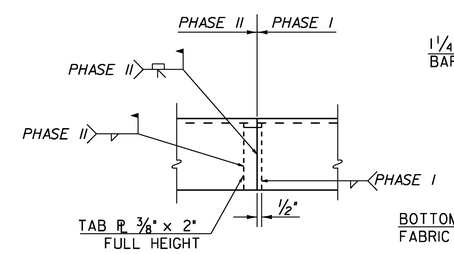

ELEVATION

SPLICE DETAIL

SCALE: 1 1/2" = 1'-0"

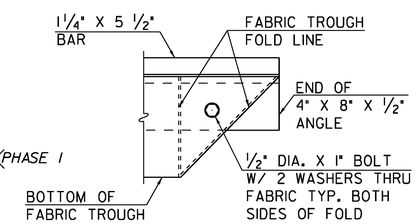

ELEVATION

FOLDED TROUGH END DETAILS

NOT TO SCALE

NOTE:
FOR SECTIONS A-A, B-B, AND C-C SEE SHEET 23.

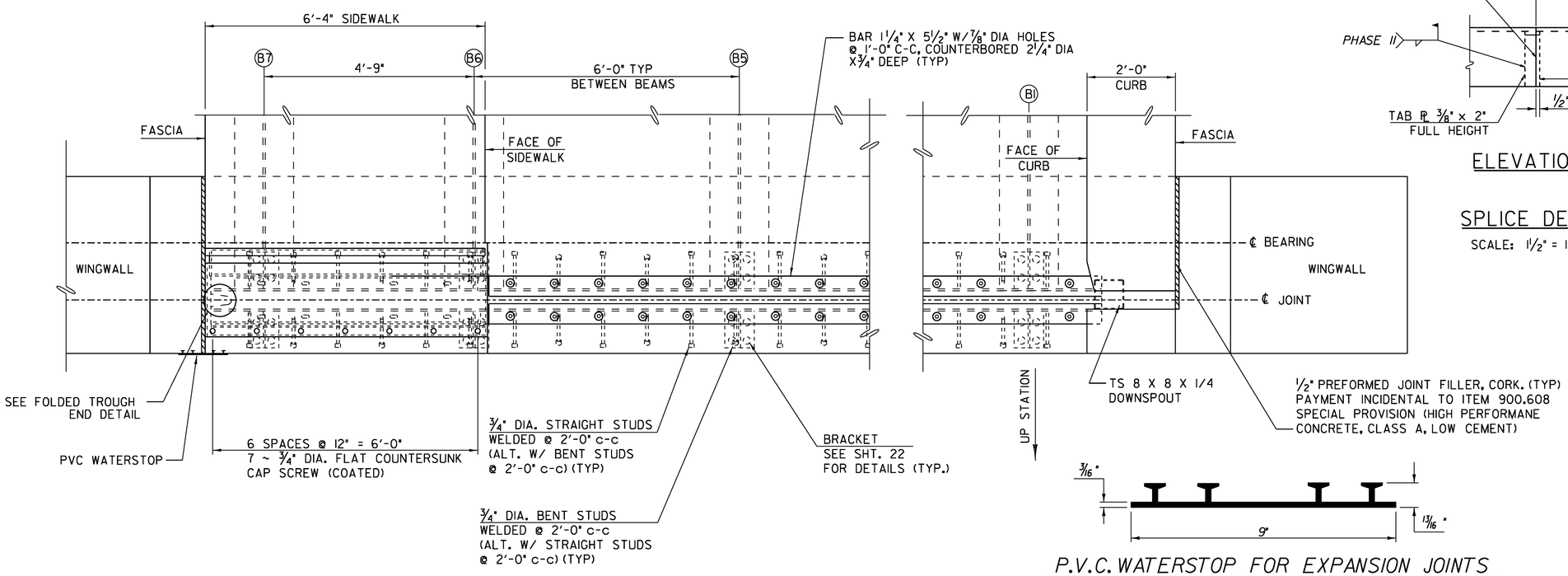

EXPANSION JOINT ABUTMENT NO. 2

SCALE: 3/4" = 1'- 0"

P.V.C. WATERSTOP FOR EXPANSION JOINTS

THE COSTS FOR P.V.C.WATERSTOP SHALL BE INCLUDED IN THE UNIT PRICE BID FOR CONCRETE. OTHER CONFIGURATIONS MAY BE USED UPON APPROVAL OF THE STRUCTURES ENGINEER.

STATE OF VERMONT
AGENCY OF TRANSPORTATION

Town Of BERKSHIRE	Bridge No. 30
Highway No. VT 118	Log Sta. / Surv. Sta.
VT 118 OVER MISSISSQUOI RIVER	
EXPANSION JOINT PLAN	
Designed By J Howe	Drawn By J Davis
Checked By R Hebert — Date 4/2/09	Bridge Design Supervisor — Date
PROJECT BERKSHIRE	PROJECT NO. BHF 0283(9)S
I.G.C. Info.	ZC304EJP.DGN
Bridge Sheet No.	Sheet 21 of 41