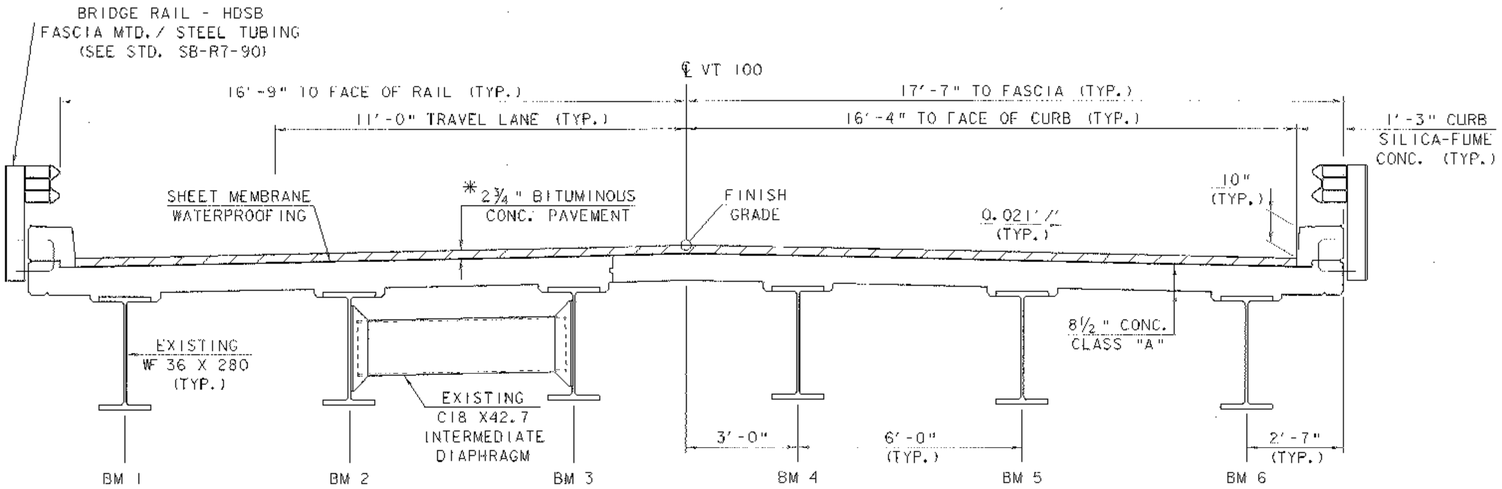

* 1½" TYPE III OVER
1¼" TYPE IV

BRIDGE TYPICAL SECTION

SCALE: ½" = 1'-0"

SEEDING FORMULA
RURAL AREAS

% WT.	LBS./A.	NAME	PUR %	GERM %
37.5	22.5	CREEPING RED FESCUE	98	85
37.5	22.5	TALL FESCUE	95	90
5.0	3.0	RED TOP	95	90
15.0	9.0	BIRDSFOOT TREFOIL	98	85
5.0	3.0	ANNUAL RYEGRASS	95	85
100.0	60.0			

GENERAL NOTES

SEED MIXTURE: SHALL NOT HAVE A WEED CONTENT EXCEEDING 0.40% BY WEIGHT AND SHALL BE FREE OF ALL NOXIOUS SEED.

SEED: TO BE APPLIED PER SEEDING FORMULAS OR AS DIRECTED BY THE ENGINEER.

FERTILIZER: FORMULA 10-20-10, TO BE USED WITH SEED, APPLIED AT THE RATE OF 500 LBS./ACRE. (HYDRO SEEDERS MAY USE 19-19-19 FORMULA).

AGRICULTURAL LIMESTONE: TO BE APPLIED AT THE RATE OF 2 TONS/ACRE, OR AS DIRECTED BY THE ENGINEER.

HAY MULCH: TO BE PLACED ON EARTH SLOPES AT THE RATE OF 2 TONS/ACRE, OR AS DIRECTED BY THE ENGINEER.

TOPSOIL: TO BE USED WITH SEED AS INDICATED ON THE PLANS, OR AS DIRECTED BY THE ENGINEER.

NOTES

1. **SCOPE OF WORK:** REMOVE AND REPLACE THE EXISTING CONCRETE BRIDGE DECK, CONSTRUCT NEW CURTAIN WALLS AND APPROACH SLABS, REMOVE AND RESET EXISTING GUARD RAIL AND PLACE NEW APPROACH PAVEMENT. PERFORM ADDITIONAL APPROACH AND SITE WORK AS SHOWN IN THE PLANS AND AS DIRECTED BY THE RESIDENT ENGINEER.

2. ALL MATERIALS AND CONSTRUCTION SHALL CONFORM TO VERMONT AGENCY OF TRANSPORTATION STANDARD SPECIFICATIONS FOR CONSTRUCTION, DATED 1990, AND ITS LATEST REVISIONS AND THE AASHTO STANDARD SPECIFICATIONS FOR HIGHWAY BRIDGES, DATED 1996, AND ITS LATEST REVISIONS.

* STAGE CONSTRUCTION - SEE SHEETS 9-10.

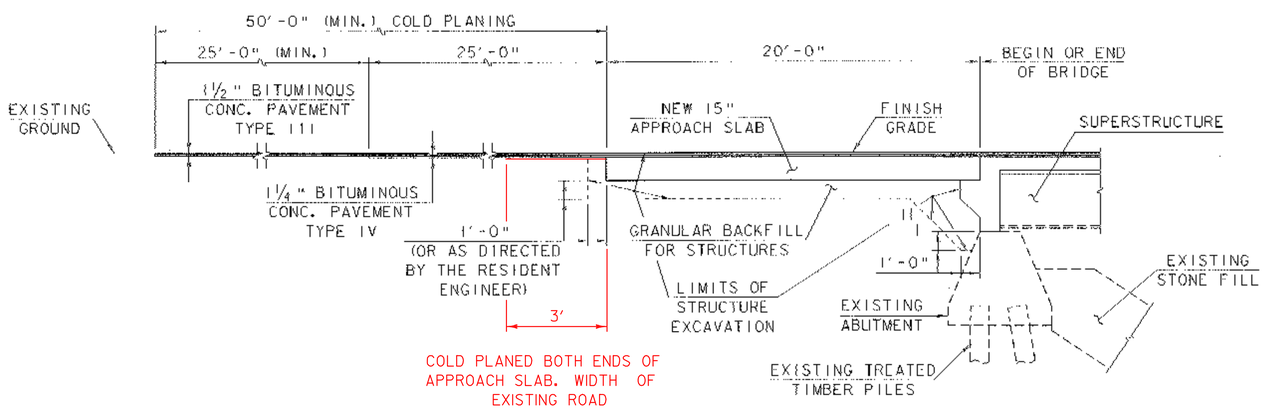

COLD PLANING AND EARTHWORK DETAILS

SCALE: ¼" = 1'-0"

MATERIAL ITEM	TOLERANCE
PAVEMENT	±¼" TOTAL THICKNESS

DESIGN CRITERIA:
1. DESIGN LIVE LOAD AASHTO HS25-44
2. DESIGN SPAN 82.60'
3. ALLOWABLE LOAD FOR SPREAD FOOTINGS ON SOIL N/A ON LEDGE N/A
4. ALLOWABLE LOAD FOR PILING N/A TYPE N/A ESTIMATED LENGTH N/A
5. ASSUMED STRUCTURAL STEEL AASHTO GRADE: 33 PAINTED (EXISTING)
6. REINFORCING STEEL GRADE 60
7. CONCRETE CLASS A f'_c = 4000 PSI
   CONCRETE CLASS B f'_c = 3500 PSI
   SILICA-FUME CONCRETE f'_c = 5000 PSI
8. ASSUMED UNIT WEIGHT OF SOIL: 140 PCF
9. ASSUMED STRENGTH OF EXISTING CONCRETE: f'_c = 3000 PSI

TRAFFIC MAINTENANCE:
1. IS TRAFFIC TO BE MAINTAINED? YES IF YES, ON EXISTING STRUCTURE * OR ON TEMPORARY BRIDGE N/A
2. TEMPORARY BRIDGE REQUIREMENTS: ONE OR TWO WAY N/A TRAFFIC CONTROL SIGNALS REQUIRED YES

LOAD FACTOR LOAD RATING (TONS)

LOADING LEVELS (LOAD FACTOR)	TRUCK H	HS	3S2	6 AXLE	3A. STR.	4A. STR.	5A. SEMI
INVENTORY A=2.17; B=1.00	42	58					
POSTED A=1.55; B=1.40	59	81	96		74	76	88
OPERATING A=1.30; B=1.67		97	114	136	89	91	

STRENGTH RF= $\frac{\phi M_n - 1.3\ M_{DL}}{A \times M_{LL+I}}$ SERVICEABILITY RF= $B\left[\frac{.95\ F_y S_{LL+I} - M_{DL}\frac{S_{LL+I}}{S_{bc}} - M_{SDL}\frac{S_{LL+I}}{S_{bc}}}{1.67\ M_{LL+I}}\right]$

YEAR 2000 ADT (ASSUMED) = 1150 VPD
DESIGN SPEED: 50 MPH

STATE OF VERMONT
AGENCY OF TRANSPORTATION

Town Of WARREN	Bridge No. 167
Highway No. VT 100	Log Sta. / Surv. Sta.
VT 100 OVER THE MAD RIVER	
PRELIMINARY INFORMATION SHEET	
Designed By M. LOZIER	Drawn By G. ROY
Checked By M. LOZIER 4/00	Bridge Design Supervisor R. R. WHITCOMB Date 4/00
PROJECT WARREN	PROJECT NO. BHF 013-4 (27)S
I.G.C. Info. 98b324\Structures\sb324pl.dgn	sb324pl.i
Bridge Sheet No.	Sheet 2 of 23

PLOTTED 07-JUN-2000

REMOVING AND RESETTING GUARD RAIL

14+03.9 RT. - 15+36.1 RT.
14+16.5 LT. - 15+48.6 LT.
16+36.1 RT. - 17+54.3 RT.
16+48.6 LT. - 17+33.9 LT.

BRIDGE RAIL - HDSB
FASCIA MTD./STEEL TUBING

15+36.1 RT. - 16+36.1 RT.
15+48.6 LT. - 16+48.6 LT.

DURABLE 4" WHITE LINE

14+70.0 - 17+25.0 LT. & RT.

DURABLE 4" YELLOW LINE

14+70.0 - 17+25.0 ℄ VT. 100

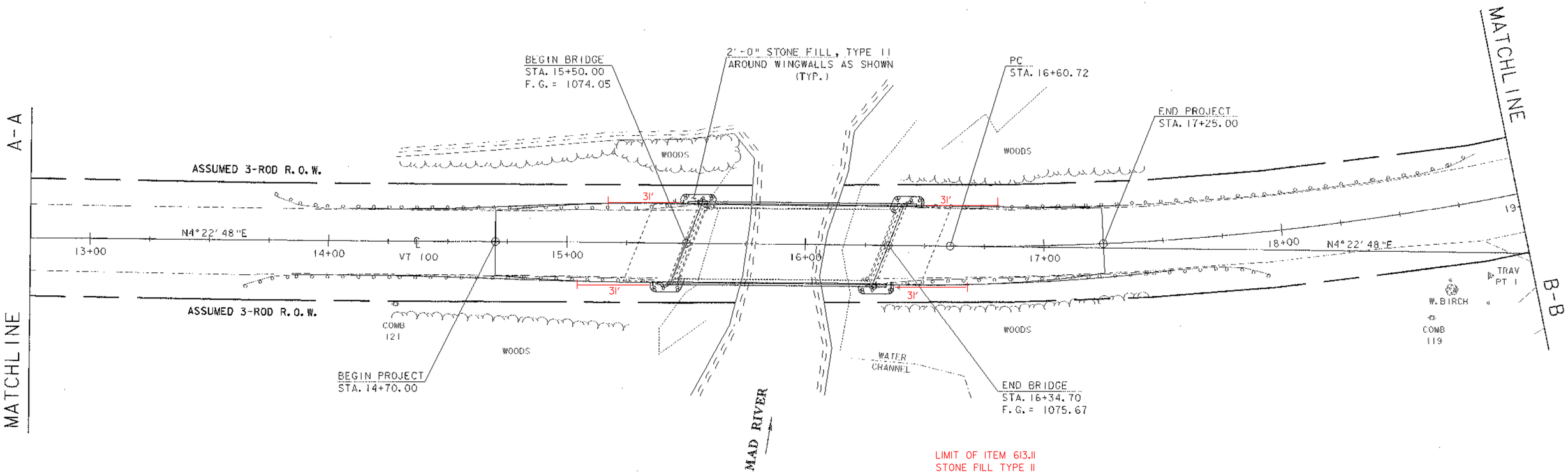

LIMIT OF ITEM 613.11
STONE FILL TYPE II

	L	W	D
WW#1 -	31 X	4 X	3
WW#2 -	31 X	4 X	3
WW#3 -	31 X	4 X	3
WW#4 -	31 X	4 X	3

+45.52, 24.62 LT.
D SHEET 4 FOR

EXISTING BRIDGE DATA

CONCRETE DECK W/ 6 - WF 36 X 280 ROLLED BEAMS (NON-COMPOSITE)
CONCRETE ABUTMENTS ON TIMBER PILES W/ CONCRETE WINGWALLS
DECK WIDTH = 35.4'
OVERALL SPAN = 84.75'
CLEAR SPAN = 80.5' CLEAR HT. = 14.5'

20 0 20 40
SCALE: 1" = 20'-0"

LAYOUT SHEET TWO

PROJECT NAME: WARREN
PROJECT NUMBER: BHF 013-4 (27)S

FILE NAME: 98b324\Structures\sb324102.1
PROJECT MANAGER: R. R. WHITCOMB
DESIGNED BY: G. ROY
PLOT DATE: 07-JUN-2000
DRAWN BY: G. ROY
CHECKED BY: M. LOZIER
SHEET 6 OF 23

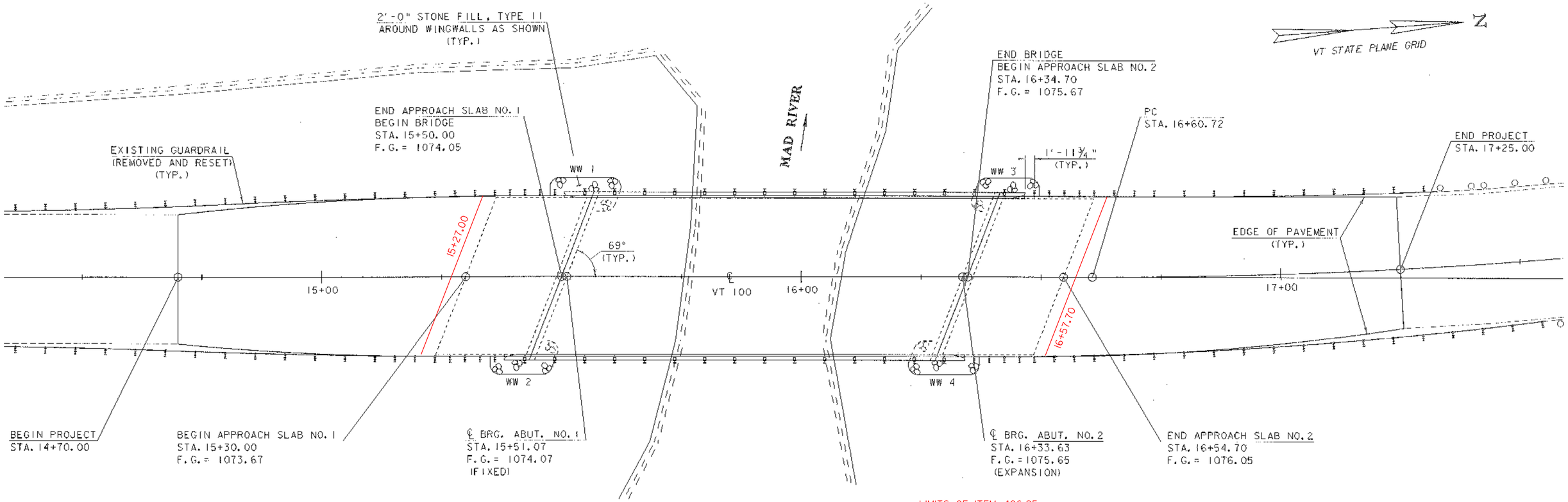

LIMITS OF ITEM 406.25
BITUMINOUS CONCRETE PAVEMENT (PG 58-34)
STA 15+27.00 ~ STA 16+57.70 TYPE III

PLAN

10 0 10 20
SCALE: 1" = 10'-0"

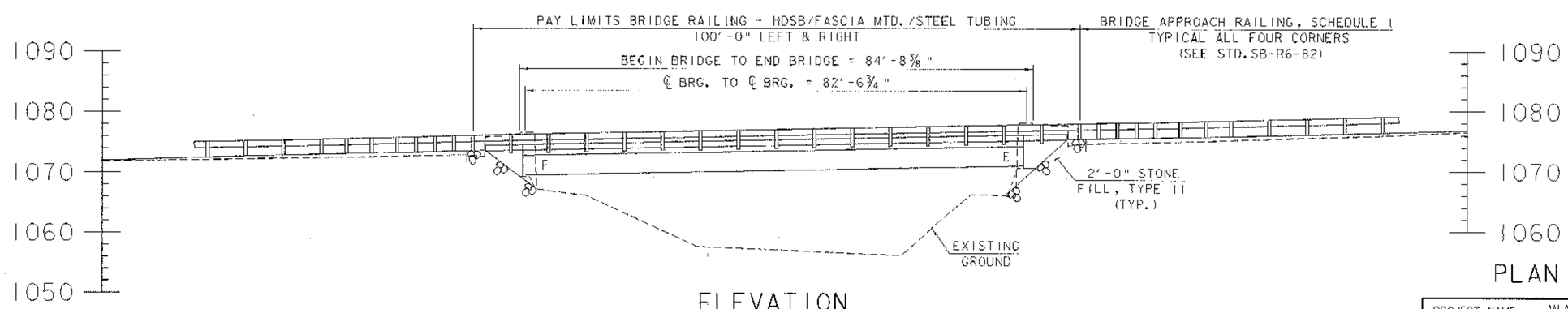

ELEVATION

10 0 10 20
SCALE: 1" = 10'-0"

PLAN AND ELEVATION

PROJECT NAME: WARREN	
PROJECT NUMBER: BHF 013-4 (27)S	
FILE NAME: 98b324\Structures\sb324pe.i	PLOT DATE: 07-JUN-2000
PROJECT MANAGER: R. R. WHITCOMB	DRAWN BY: G. ROY
DESIGNED BY: G. ROY	CHECKED BY: M. LOZIER
	SHEET 11 OF 23