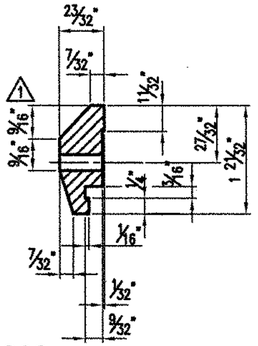

208 ~ REQ'D CLAMP BAR CB-03-A #19447 (BARRIER RAIL)

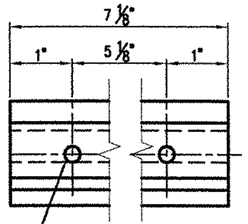

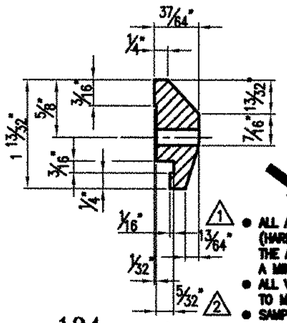

104 ~ REQ'D CLAMP BAR CB-01-H #28596 (HANDRAIL)

ANODIZED

- ALL ALUM. COMPONENTS SHALL BE ANODIZED TO A BLACK (HARD SATIN FINISH) COLOR, FED. STD. COLOR No. 27038. THE ANODIC COATING SHALL BE ARCHITECTURAL CLASS I WITH A MIN. THICKNESS OF 0.7 mils AND A MIN. WEIGHT OF 35 mg/sq in
- ALL VISIBLE STN. STL. HARDWARE SHALL BE FIELD PAINTED BLACK TO MATCH THE ANODIZED RAIL. TOUCH UP PAINT SHALL BE PROVIDED.
- SAMPLES SHALL BE SUBMITTED FOR THE ENGINEER'S APPROVAL.

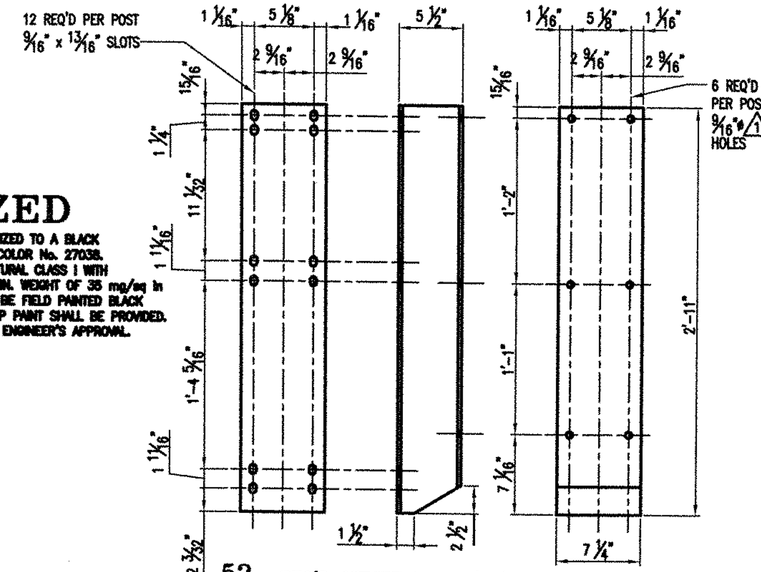

52 ~ REQ'D OFFSET BLOCK 'OB' H-SECTION DETAIL

GENERAL NOTES

ALL MATERIAL AND WORKMANSHIP SHALL BE IN ACCORDANCE WITH VERMONT AGENCY OF TRANSPORTATION STANDARD SPECIFICATIONS FOR CONSTRUCTION DATED 2001 AND ITS LATEST REVISIONS.

DESCRIPTION	ASTM	ALLOY/GR.	REMARKS
RAILS, POSTS, BASES, SPLICES, CLAMP BARS, PINS,	B221	6061–T6 OR 6351–T5	MIN. YIELD STRENGTH Fy = 240 MPa (35,000 psi.)
RIVETS	B316	6061–T6	BUTTON HD., CONE PT. COLD DRIVEN
OFFSET BLOCKS (H–SECT.)	B308	6061–T6	
STAINLESS STEEL BOLTS	A193	GRADE B8	
STAINLESS STEEL HEX NUTS	A276	TYPE 304	
STAINLESS WASHERS	A276	TYPE 304	
ANCHOR RODS	A449		GALV. A153
STEEL HEX NUTS	A563	GRADE DH	GALV. A153
STEEL WASHERS	F436		GALV. A153
ANCHOR PLATES	A569		COMMERCIAL QUALITY (PLAIN)
ALUMINUM WASHERS	B209	6061–T6	
PREFORMED PADS			SECTION 731.01 OR 731.02
BACK–UP PLATES	A36		GALV. A123
ELECTRODES FOR WELDING	AWS A5.10 ER5356		

POSTS TO BE NORMAL TO GRADE AND RAILS SHALL BE PARALLEL TO GRADE. RAILS TO BE ATTACHED TO A MINIMUM OF THREE POSTS WHEN POSSIBLE.

ALL RAILS AND WELDS TO BE FREE FROM ALL BURRS AND ROUGH EDGES. ENDS OF TUBE SECTIONS SHALL BE SAWED OR MILLED. GRIND ALL CUT EDGES SMOOTH.

ALL THREADS TO BE UNC CLASS 2A/2B.

ALL EXTRUSION TOLERANCES NOT SHOWN SHALL BE IN ACCORDANCE WITH ASTM B221.

IF CUT THREADS ARE USED, BOLT DIAMETER SHALL NOT BE LESS THAN NOMINAL DIAMETER. IF ROLLED THREADS ARE USED, BOLT DIAMETER SHALL NOT BE LESS THAN THE ROOT DIAMETER OF THREADS

THE SPLICE BAR SHALL BE ATTACHED TO THE RAIL ELEMENT AS FOLLOWS: THE RAIL SPLICE AT THE BRIDGE EXPANSION JOINT SHALL BE FASTENED ON BOTH SIDES OF THE RAIL SPLICE USING THE FULLY THREADED WASHER FACED BOLTS, TIGHTENED SECURELY TO THE END OF THREADS, AND LEAVING A 1/8" GAP. THIS ALLOWS EXPANSION ON BOTH SIDES OF THE JOINT.

ALL NUTS SHALL COMPLY WITH AMERICAN HEXAGON ANSI SPECIFICATIONS B18.2

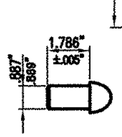

RIVET DETAIL 'rv1' #19420

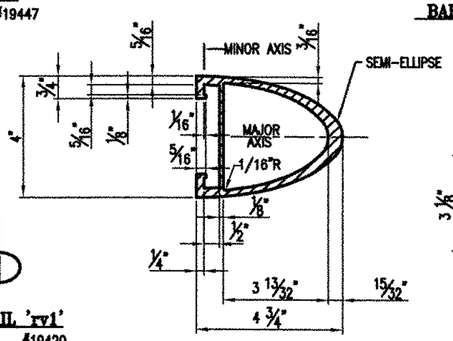

TYPICAL SECTION (BARRIER RAIL) #19466

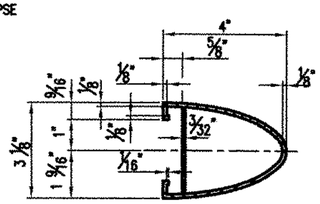

TYPICAL SECTION (HANDRAIL) #19464

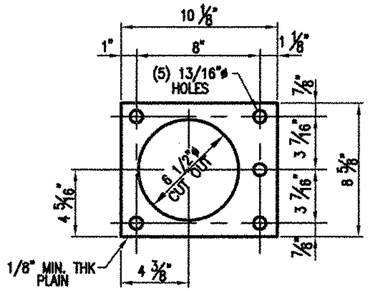

52 ~ REQ'D ANCHOR PLATE AP1 #31286

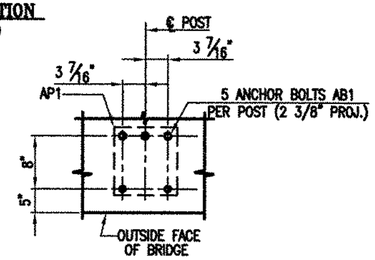

TYPICAL ANCHOR BOLT SETTING

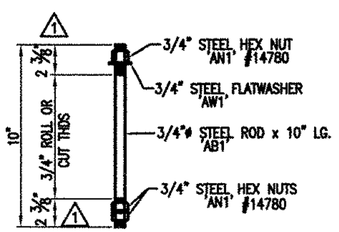

260 ~ REQ'D ANCHOR BOLTS AB1

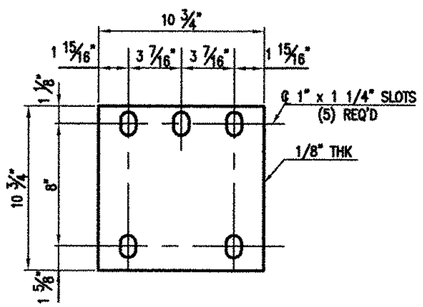

52 ~ REQ'D FABRIC PADS 'EP1'

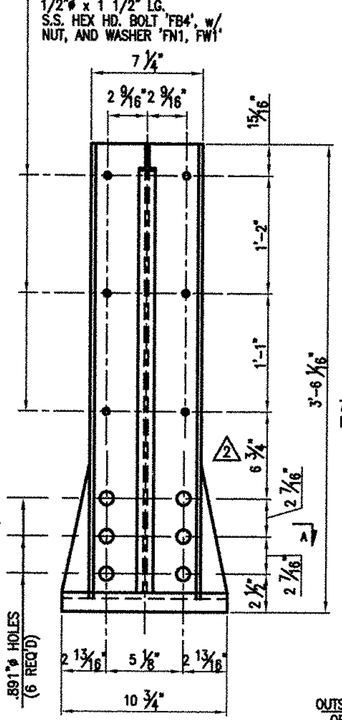

52 ~ REQ'D FABRICATED RAIL POSTS 'P1' (CURBSIDE)(REFLECTOR UNITS TO BE SUPPLIED & PLACED BY OTHERS)

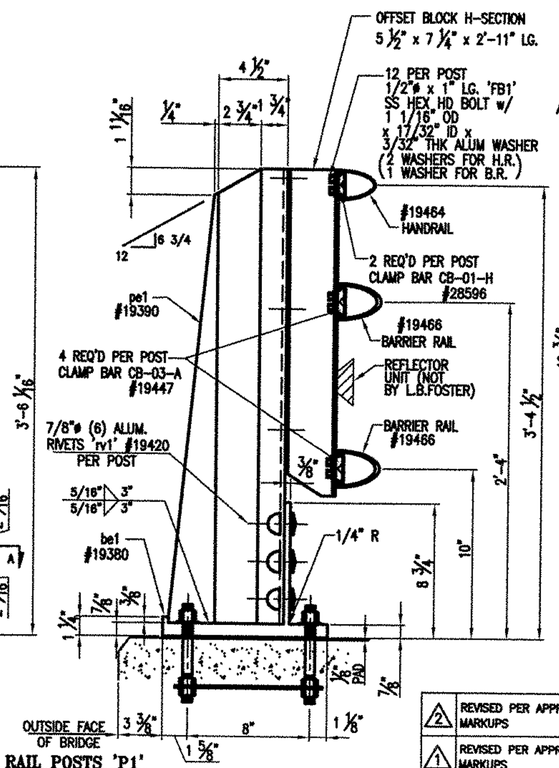

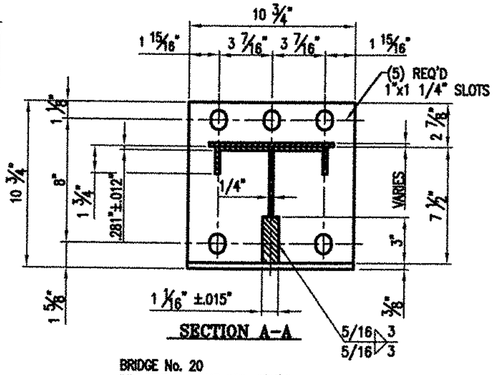

SECTION A–A

BRIDGE No. 20
PROJECT No. BHF 030–2(19)S
ITEM No: 525.22

APPROVED: _____ REQ'D APPROVAL _____ DRAWING _____

L.B. FOSTER COMPANY
1016 GREENTREE ROAD
PITTSBURGH, PENNSYLVANIA 15220

FOR: BECK & BELLUCCI, INCORPORATED
VERMONT AGENCY OF TRANSPORTATION
TOWN OF CAMBRIDGE, COUNTY LAMOILLE
BRIDGE RAILING FOR VT15 (MINOR ARTERIAL) OVER LAMOILLE RIVER
3L ALUM BRIDGE RAILING ~ GENERAL NOTES & TYP. DETAILS

REV.	DESCRIPTION	BY	DATE
2	REVISED PER APPROVER MARKUPS	CMS	03 27 07
1	REVISED PER APPROVER MARKUPS	CMS	03 22 07

MADE CMS DATE 01/30/07 JOB No. AR0364 CUST. No.
CHECK BLJ DATE 02/26/07 DRAWING LB5 REV. No. 2

10a BR