JOB NO.	DRG. NO.
313	J3

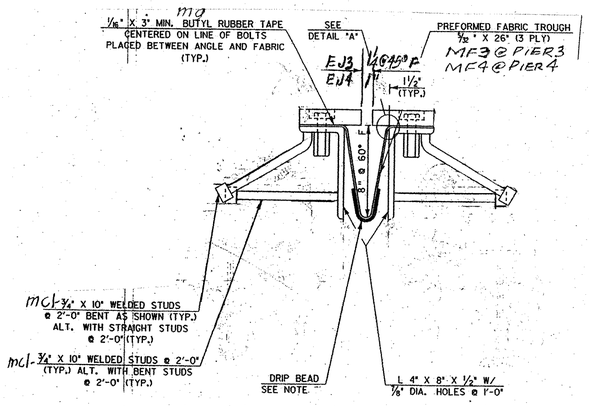

TYPICAL SECTION BETWEEN BEAMS

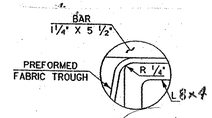

DETAIL "A"

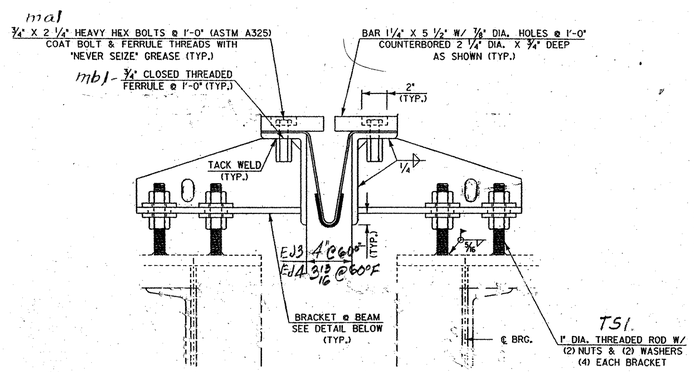

TYPICAL SECTION AT BEAMS

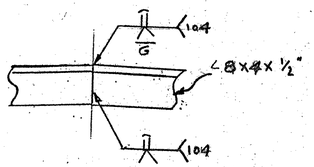

WELDING DETAIL

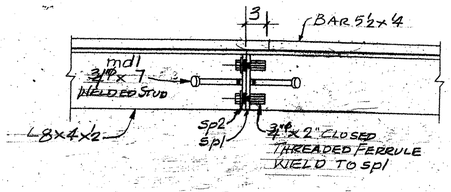

BOLTED FIELD SPLICE

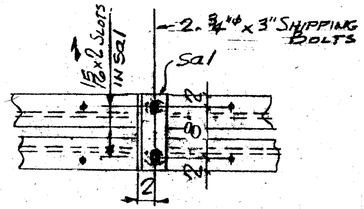

SHIPPING DEVICE
SPACED 5'-0" O.C. MAX.

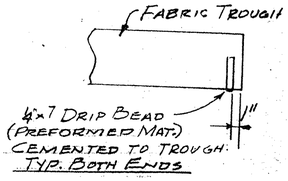

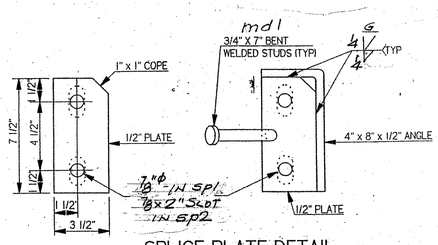

SPLICE PLATE DETAIL

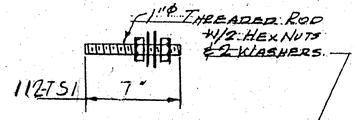

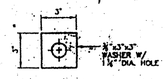

WASHER FOR BRACKET
W1

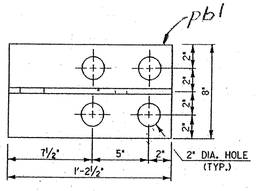

BRACKET PLAN

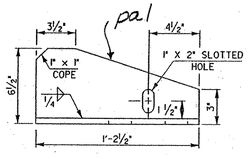

BRACKET ELEVATION

RECEIVED
CK'D BY DRP OK'D BY
MAR 09 2007
RESUBMIT ____ APPROVED ✓
BY ____ DATE 3/30/07

REV.	REMARKS	DATE	DWN	CHK	APP	Q.A.	NO.	DIA.	LGT	TYPE	WASHER
	OUT FOR APPROVAL	3-7-07									
	OUT FOR APPROVAL										
	ISSUED TO SHOP										
	FIELD & OFFICE										

PROJECT NO. BHF-030-2 (19) STATE PROJECT NO. BRIDGE-20

MATERIAL: AASHTO M270-36 ELECTRODES: PER PROC HOLES: AS NOTED SHOP BOLTS: 3/4"ϕ A.S.

SURFACE PREP. & PAINT:

GALVANIZE AFTER FAB ASTM-A123

DESCRIPTION: MISC SECTIONS & DETAILS

JOB: VERMONT 15 OVER LAMOILLE RIVER CAMBRIDGE, VT.

CUSTOMER: BECK & BELLUCCI

	DRAWN BY	DATE
	JPE	2-07
	CHKD BY	
	APPROV BY	
	Q.A.	

CASCO BAY STEEL STRUCTURES, INC.
75 SPRING HILL ROAD SACO, MAINE 04072
PHONE (207) 282-7360 FAX. (207) 282-1179

JOB NO.	DRG. NO.
313	J3
	REV. △

077 EJ