FURNISHED & APPLIED IN FIELD BY OTHERS.

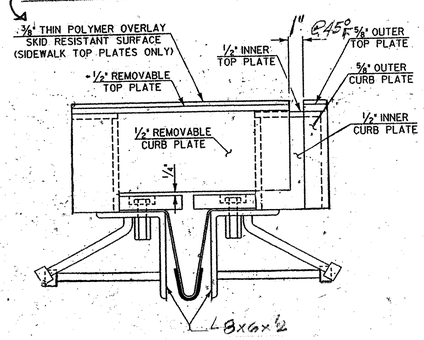

B'-B'

BC'-BC' - OPP HAND

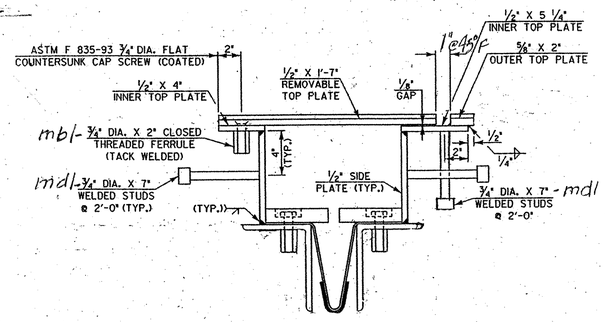

C'-C'

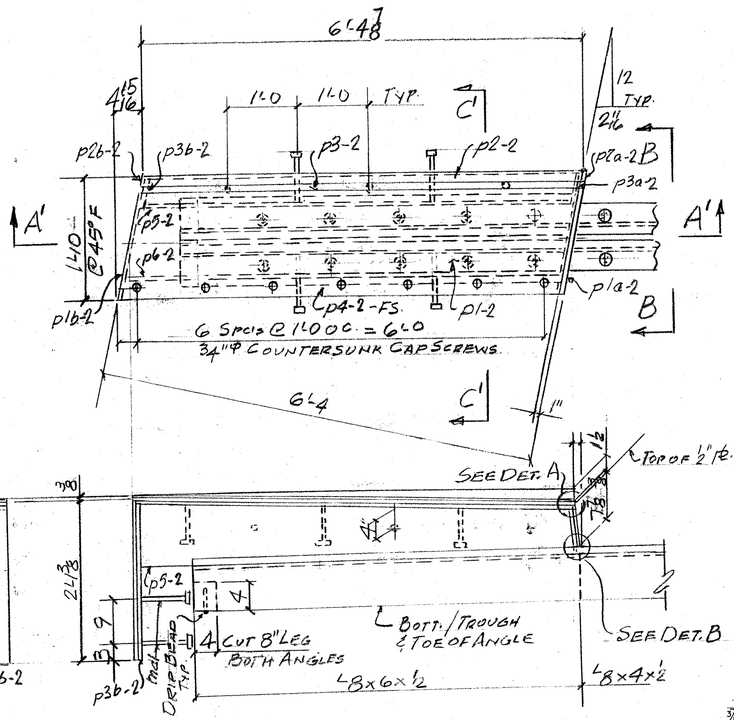

A-A

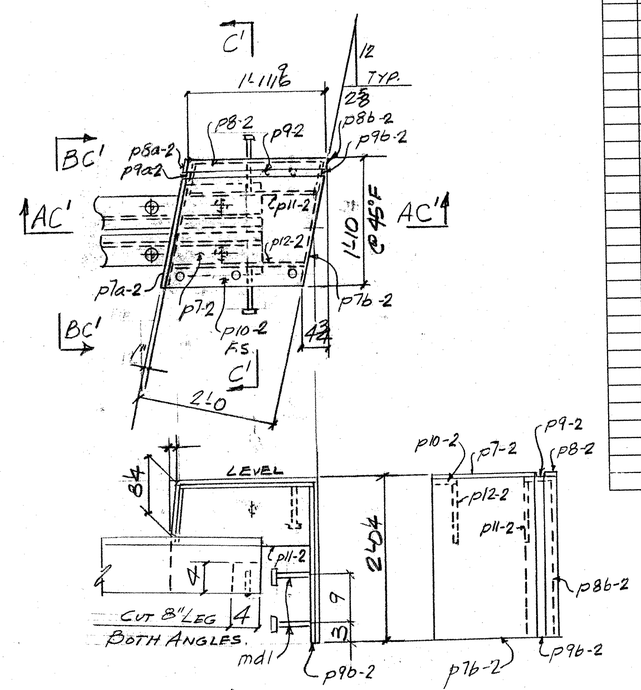

AC'-AC'

BY OTHERS

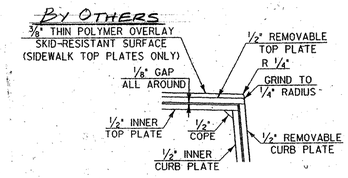

DETAIL "A"

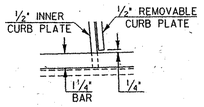

DETAIL "B"

RECEIVED
CK'D BY DRP OK'D BY
MAR 09 2007
RESUBMIT ____ APPROVED ✓
BY CUC DATE 3/30/07

ABM INFO		SHOP BILL						JOB NO. 313	DRG. NO. J2A
PAGE	LINE	NO.	DESCRIPTION	FT	IN	ASSEM. MARK	SHIPPING MARK	REMARKS	WEIGHT
		1	PL 1/2 x 19	6	9 1/2	p1-2			
		1	PL 1/2 x 8 3/4	1	7 1/2	p1a-2			
		1	PL 1/2 x 19 1/2	2	0 3/4	p1b-2			
		1	BAR 2 x 5/8	6	5 1/16	p2-2			
		1	DO		8 1/2	p2a-2			
		1	DO	2	0 3/4	p2b-2			
		1	PL 1/2 x 5 1/4	6	3 3/8	p3-2			
		1	DO		8	p3a-2			
		1	DO	2	0 1/4	p3b-2			
		1	PL 1/2 x 4	6	4 3/4	p4-2			
		1	PL 1/2 x 10 3/4	6	2 3/8	p5-2			
		1	PL 1/2 x 10 3/8	6	3 3/8	p6-2			
		1	PL 1/2 x 19	2	3 3/4	p7-2			
		1	PL 1/2 x 9	1	7 1/2	p7a-2			
		1	PL 1/2 x 19 1/2	1	11 3/4	p7b-2			
		1	BAR 2 x 5/8	2	0	p8-2			
		1	DO		8 1/2	p8a-2			
		1	DO	1	11 3/8	p8b-2			
		1	PL 1/2 x 5 1/4	1	10 1/2	p9-2			
		1	DO		8 3/8	p9a-2			
		1	DO	1	11 3/8	p9b-2			
		1	PL 1/2 x 4	1	11 3/8	p10-2			
		1	PL 1/2 x 8 3/4	1	10 1/2	p11-2			
		1	PL 1/2 x 8 3/8	1	11 1/2	p12-2			
		15	3/4" Φ ANC STUDS		7	md1			
		10	3/4" Φ THREADED FERRULE		2	mb1			
		10	3/4" Φ FLAT HEAD CAP SCREWS		2 1/2	mh1		ASTM F-835-93	

PAY ITEM 516.10

OUT FOR APPROVAL	3-7-07										
OUT FOR APPROVAL											
ISSUED TO SHOP											
FIELD & OFFICE											
REV.	REMARKS	DATE	DWN	CHK	APP	Q.A.	NO.	DIA.	LGT	TYPE	WASHER

PROJECT NO. BHF-030-2(19)S STATE PROJECT NO. BRIDGE-20

MATERIAL: AASHTO M270-36 ELECTRODES: PER PROC. HOLES: AS NOTED SHOP BOLTS: 3/4" Φ F.H. CAP SCREWS

SURFACE PREP. & PAINT:

GALVANIZE AFTER FAB. ASTM-A123

DESCRIPTION: SIDEWALK & CURB - PIER 4

JOB: VERMONT 15 OVER LAMOILLE RIVER CAMBRIDGE, VT.

CUSTOMER: BECK & BELLUCCI

	DRAWN BY	DATE
	JPF	2-07
	CHKD BY	
	APPROV BY	
	Q.A.	
	JOB NO.	DRG. NO.
	313	J2A
		REV. △

CASCO BAY STEEL STRUCTURES, INC.
75 SPRING HILL ROAD SACO, MAINE 04072
PHONE (207) 282-7360 FAX. (207) 282-1179

0916 EJ