FURNISHED & APPLIED IN FIELD BY OTHERS.

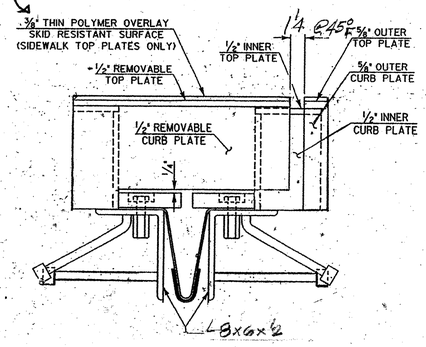

B-B

BC-BC-OPP. HAND

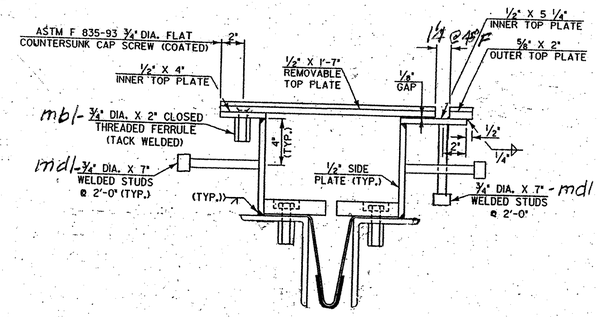

C-C

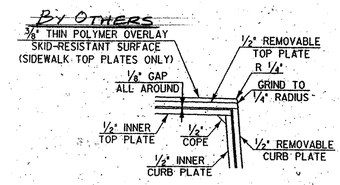

DETAIL "A"

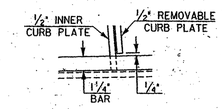

DETAIL "B"

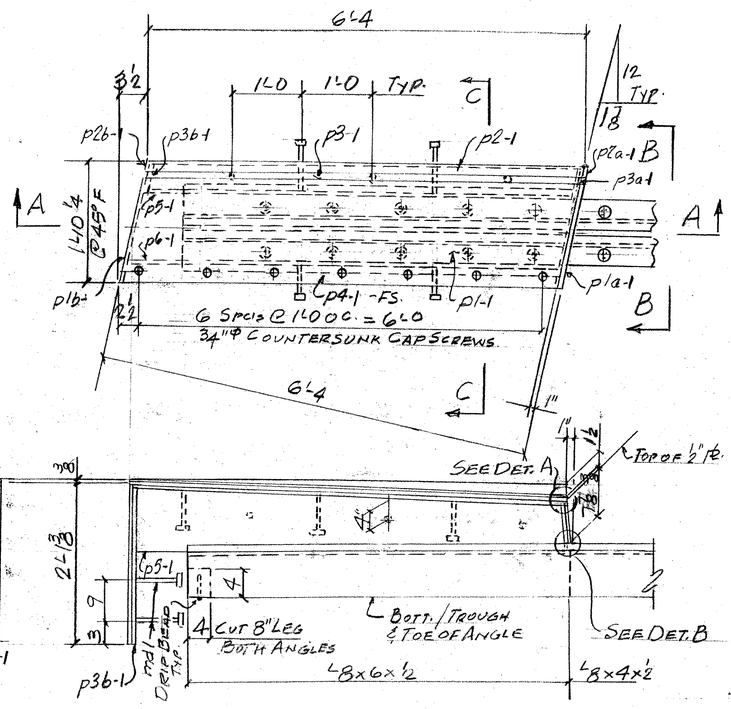

A A

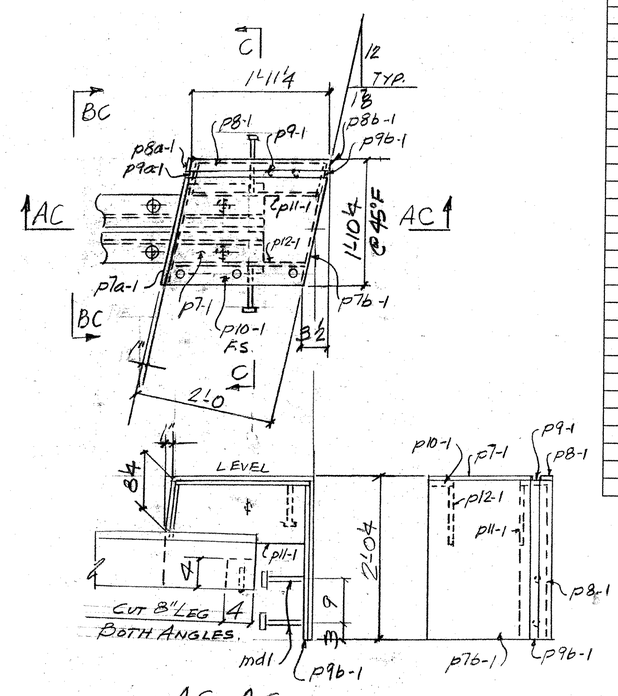

AC-AC

ABM INFO		SHOP BILL							JOB NO. 313	DRG. NO. J1A
PAGE	LINE	NO.	DESCRIPTION	FT	IN	ASSEM. MARK	SHIPPING MARK	REMARKS	WEIGHT	
		1	PL 1/2 x 19	6	7	p1-1				
		1	PL 1/2 x 3 3/8	1	7 1/4	p1a-1				
		1	PL 1/2 x 19 1/4	2	0 3/8	p1b-1				
		1	BAR 2 x 5/8	6	4 1/2	p2-1				
		1	DO		8 1/2	p2a-1				
		1	DO	2	0 1/4	p2b-1				
		1	PL 1/2 x 5 1/4	6	3 1/2	p3-1				
		1	DO		8	p3a-1				
		1	DO	2	6 1/4	p3b-1				
		1	PL 1/2 x 4	6	3 3/8	p4-1				
		1	PL 1/2 x 10 3/4	6	2 3/8	p5-1				
		1	PL 1/2 x 10 3/8	6	3 3/8	p6-1				
		1	PL 1/2 x 19	2	2 1/4	p7-1				
		1	PL 1/2 x 9	1	7 1/4	p7a-1				
		1	PL 1/2 x 19 1/4	1	11 3/4	p7b-1				
		1	BAR 2 x 5/8	1	11 1/2	p8-1				
		1	DO		8 3/8	p8a-1				
		1	DO	1	11 3/8	p8b-1				
		1	PL 1/2 x 5 1/4	1	10 1/4	p9-1				
		1	DO		8 3/8	p9a-1				
		1	DO	1	11 3/8	p9b-1				
		1	PL 1/2 x 4	1	10 3/4	p10-1				
		1	PL 1/2 x 8 3/4	1	9 3/8	p11-1				
		1	x 8 3/8	1	11 3/8	p12-1				
		15	3/4" Φ ANC. STUDS		7	md1				
		10	3/4" Φ THREADED FERRULE		2	mb1				
		10	3/4" Φ FLATHEAD CAP SCREWS		2 1/2	mh1		ASTM F-835-93		
			PAY ITEM 516.10							

REV.	REMARKS	DATE	DWN	CHK	APP	Q.A.	NO.	DIA.	LGT	TYPE	WASHER
	OUT FOR APPROVAL	2-7-07									
	OUT FOR APPROVAL										
	ISSUED TO SHOP										
	FIELD & OFFICE										

PROJECT NO. BHF-030-2(19)S STATE PROJECT NO. BRIDGE-20

MATERIAL: AASHTO M270-36 | ELECTRODES: PER PROC. | HOLES: AS NOTED | SHOP BOLTS: 3/4" Φ F.H. CAPSCREWS

SURFACE PREP. & PAINT:

GALVANIZE AFTER FAB - ASTM - A123

DESCRIPTION: SIDEWALK & CURB - PIER 3

JOB: VERMONT 15 OVER LAMOILLE RIVER CAMBRIDGE, VT.

CUSTOMER: BECK & BELLUCCI

DRAWN BY	DATE
JPF	2-07
CHKD BY	
APPROV BY	
Q.A.	

CASCO BAY STEEL STRUCTURES, INC.
75 SPRING HILL ROAD SACO, MAINE 04072
PHONE (207) 282-7360 FAX. (207) 282-1179

JOB NO.	DRG. NO.
313	J1A
	REV. △

1" = 1'-0

RECEIVED
CK'D BY DRP CK'D BY
MAR 09 2007
RESUBMIT APPROVED ✓
BY DATE 3/30/07

04 EJ