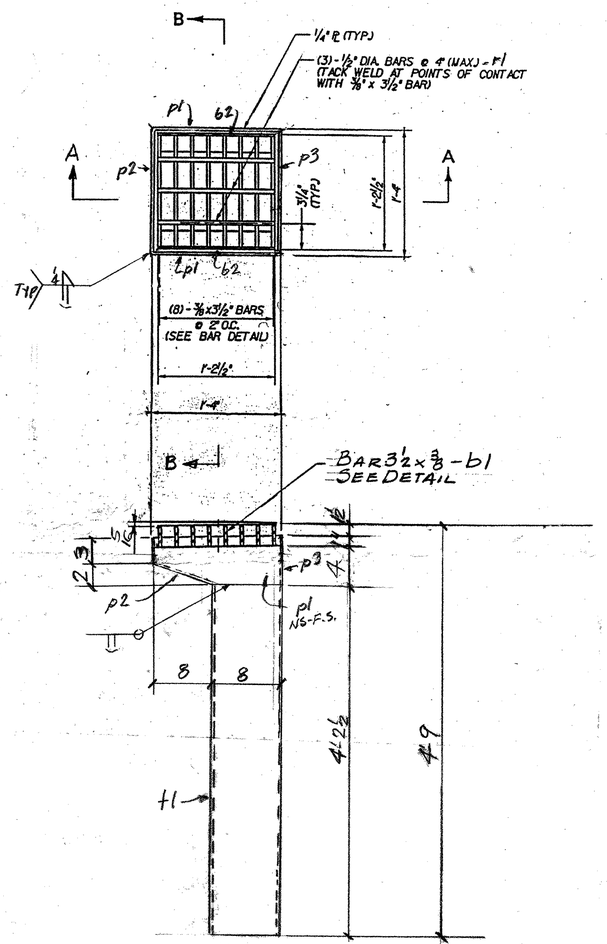

A-A

SC1 - 5 REQ'D.

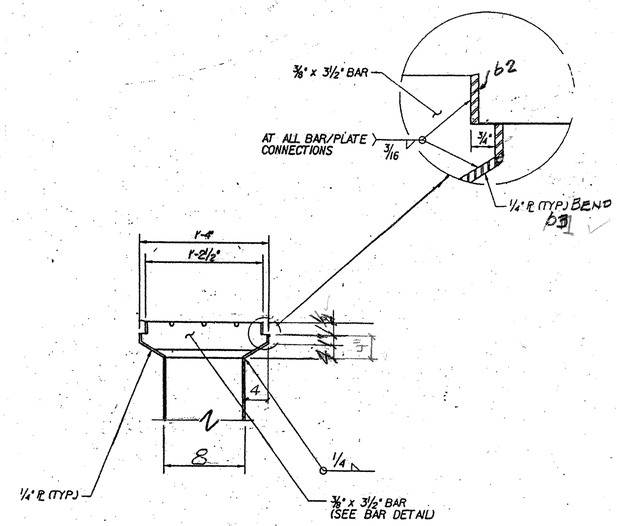

SECTION B-B

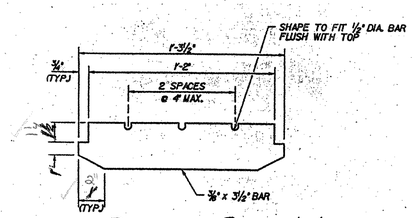

DETAIL - BAR b1

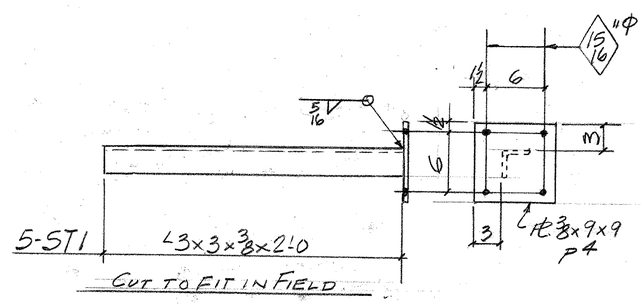

ABM INFO		SHOP BILL					JOB NO. 313	DRG. NO. S2
PAGE	LINE	NO.	DESCRIPTION	FT	IN	ASSEM. MARK	SHIPPING MARK	REMARKS	WEIGHT
		5	SCUPPERS	4	9		SC1		—
		5	TS 8x8x4	4	2 1/2	t1		ASTM A500-A501	
		40	BAR 3 1/2 x 3/8	1	3 1/2	b1			
		10	BAR 1 1/2 x 4	1	2 1/2	b2			
		15	1/2" Φ BAR	1	2 1/2	r1			
		10	PL 4 x 6 3/4	1	4	p1		BEND	
		5	PL 4 x 11 1/4	1	3 1/2	p2		BEND	
		5	PL 4 x 5	1	3 1/2	p3			
		5	L3 x 3 x 3/8	2	0		ST1		
		5	PL 3/8 x 9		9	p4			
		20	3/4" Φ BOLTS - A325 GALV.		2 3/4		FIELD	W/NEW	
			PAY ITEM 506.60						

REV.	REMARKS	DATE	DWN	CHK	APP	Q.A.	NO.	DIA.	LGT	TYPE	WASHER
	OUT FOR APPROVAL	1-13-07									
	OUT FOR APPROVAL										
	ISSUED TO SHOP										
	FIELD & OFFICE										

PROJECT NO. BHF-030-2(19)S STATE PROJECT NO. BRIDGE-20

MATERIAL: AASHTO M270-GR36 ELECTRODES: PER PROC. HOLES: AS NOTED. SHOP BOLTS: —

SURFACE PREP. & PAINT:

GALVANIZE AFTER FAB (ASTM-A123)

DESCRIPTION: SCUPPERS

JOB: VERMONT 15 OVER LAMOILLE RIVER CAMBRIDGE, VT.

CUSTOMER: BECK & BELLUCCI

DRAWN BY	DATE
JPF	1-07
CHKD BY	
EJ	
APPROV BY	
Q.A.	
JOB NO. 313	DRG. NO. S2
	REV. △

RECEIVED
CK'D BY DRD OK'D BY
FEB 21 2007
RESUBMIT APPROVED AS NOTED
BY DATE

CASCO BAY STEEL STRUCTURES, INC.
75 SPRING HILL ROAD SACO, MAINE 04072
PHONE (207) 282-7360 FAX. (207) 282-1179

1" = 1'-0