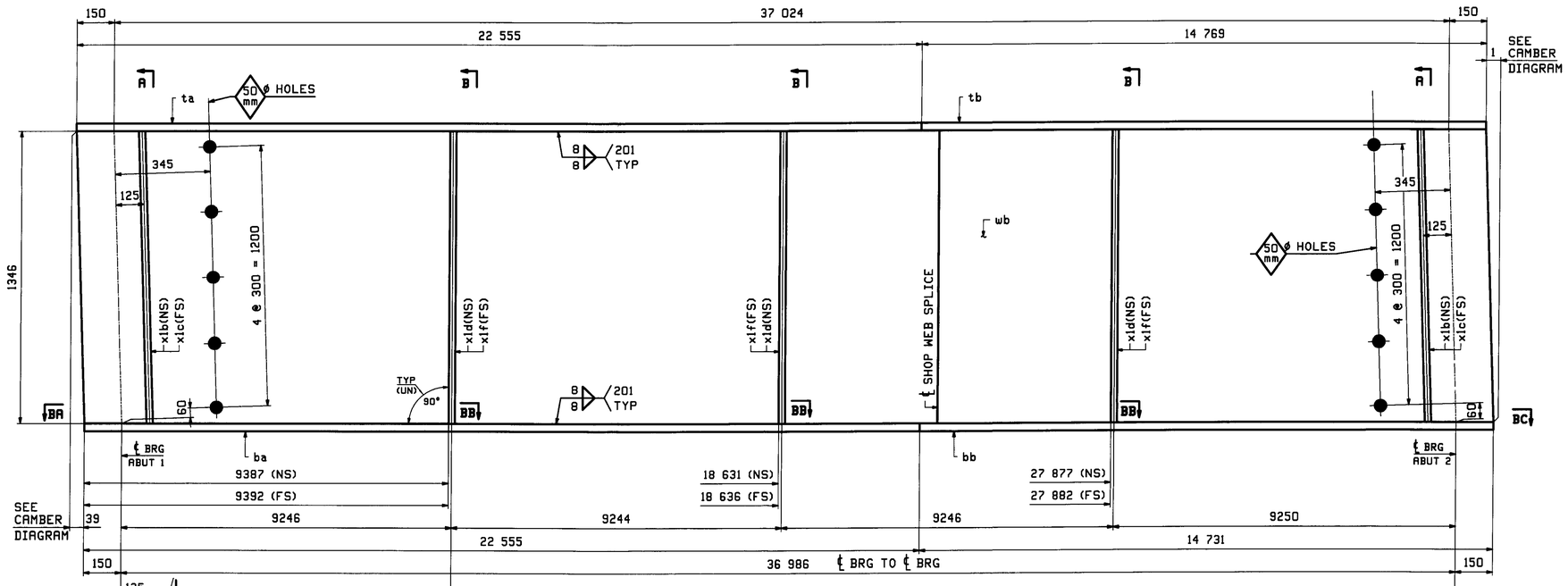

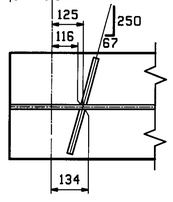

SECTION BA

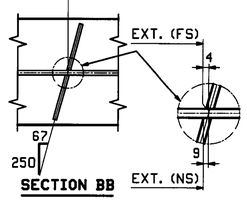

SECTION BB

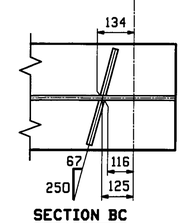

SECTION BC

ONE - GIRDER - 2G2

FOR GIRDER STANDARDS SEE DRAWING X1.
FOR CAMBER DIAGRAM SEE DRAWING C1.
FOR GENERAL NOTES & WELD PROCEDURES SEE DRAWING GN1.
H2-3 DENOTES MATERIAL SUBJECT TO CHARPY V-NOTCH TESTING.

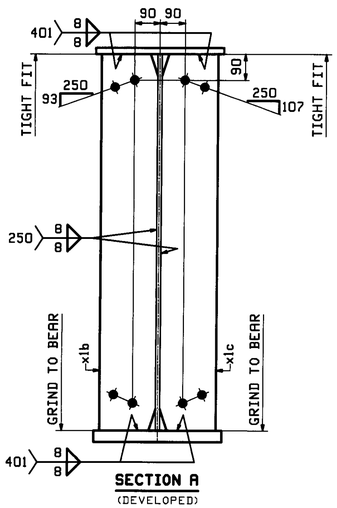

SECTION A
(DEVELOPED)

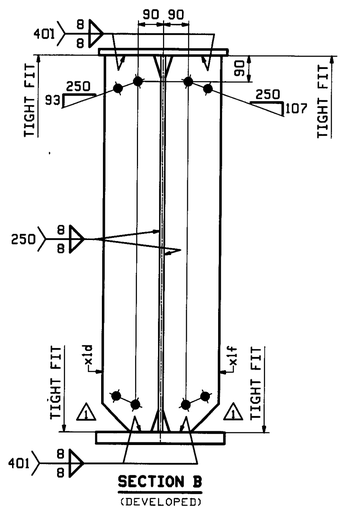

SECTION B
(DEVELOPED)

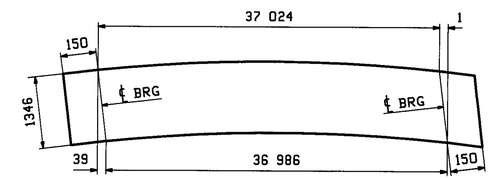

ORIENTATION DIAGRAM
FOR CAMBER SEE DWG C1

RECEIVED
CK'D BY JFL OK'D BY
MAY 2 0 2009
APPROVED
BY KMH DATE 6/6/09

ABM INFO		SHIP	BILL OF MATERIAL					JOB NO. 400	DRAWING NO. 2	REV. 1
PAGE	LINE	MARK	QTY	MARK	MATERIAL	LENGTH m	LENGTH mm	REMARKS	WT	PROCUREMENT NOTES
		2G2	1		GIRDER				19087 kg 33281 lbs	
1	J		1	wa	PL 16x1346	22	900	(M270M-345WT2)	(H2-3)	
1	L		1	wb	PL 16x1346	14	444	(M270M-345WT2)	(H2-3)	
1	E		1	ta	PL 22x458	22	555	(M270M-345WT2)	(H2-3)	
1	G		1	tb	PL 22x458	14	769	(M270M-345WT2)	(H2-3)	
1	A		1	ba	PL 41x458	22	555	(M270M-345WT2)	(H2-3)	
1	C		1	bb	PL 41x458	14	731	(M270M-345WT2)	(H2-3)	
2	B		2	x1b	PL 19x200	1	346	(M270M-345WT2)	(H2-3)	MIE
2	B		2	x1c	PL 19x200	1	346	(M270M-345WT2)	(H2-3)	MIE
2	C		3	x1d	PL 13x200	1	346			
2	C		3	x1f	PL 13x200	1	346			

REV.	DATE	REMARKS	DWN	CHK	APVL	SHOP
1	5/19 2009	APPROVAL COMMENTS	ZAD	ELC	MAY 27 2009	
0					APR 15 2009	

MATERIAL	SURFACE PREP & PAINT	HOLES	SHOP BOLTS
M270M-345W(UN)	SEE GN1	15/16"ø (UN)	NONE

DESCRIPTION: GIRDER - 2G2

CASCO BAY STEEL STRUCTURES, INC.
75 SPRING HILL ROAD SACO, MAINE 04072
PHONE (207) 282-7360 FAX. (207) 282-1179
TENSOR 2860

STRUCTURE:	U.S ROUTE 2 OVER WINOOSKI RIVER PRINCIPAL ARTERIAL BRIDGE NO 74 COUNTY OF WASHINGTON	DRAWN JTB	DATE: 04/03
		CHKD. ELC	DATE 04/06
LOCATION:	TOWN OF EAST MONTPELIER, VERMONT	JOB NO.	DWG NO.
PROJ NO.	BRF 028-3 (36)	400	2
CUSTOMER:	WINTERSET, INC		REV. 1