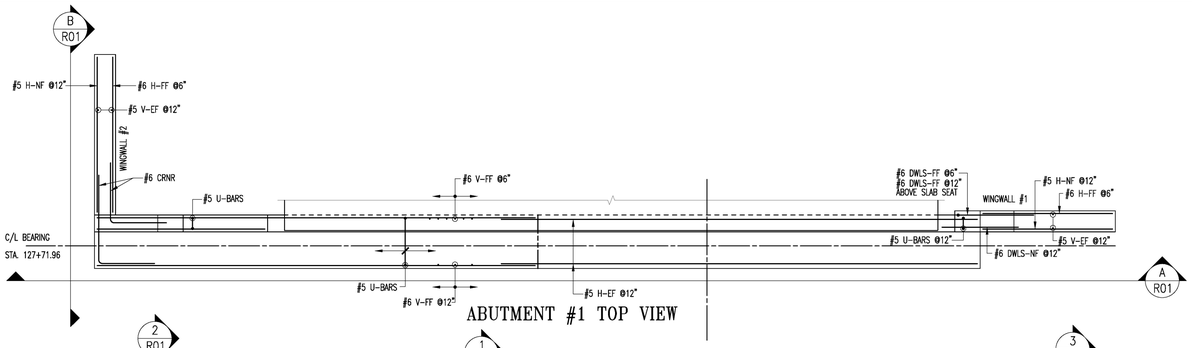

ABUTMENT #1 TOP VIEW

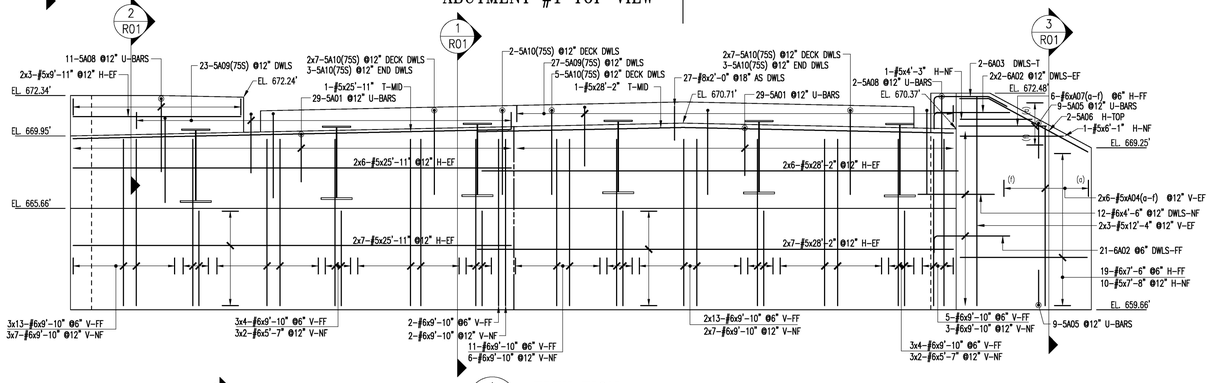

A ELEVATION

ABUTMENT #1

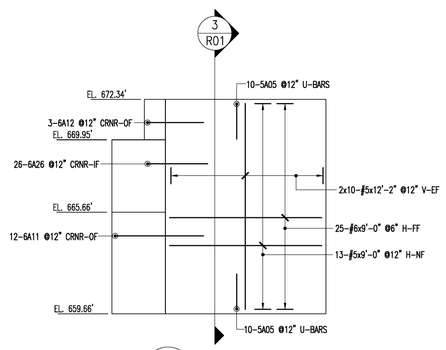

B ELEVATION

WINGWALL #2

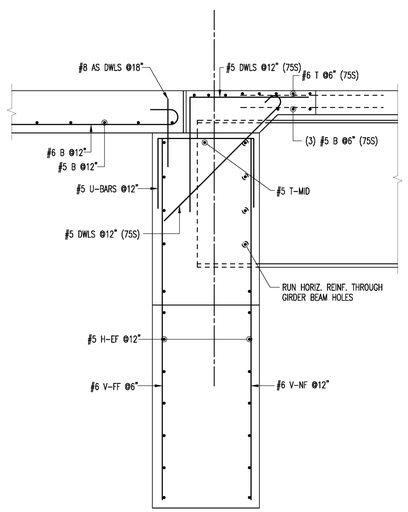

1 SECTION

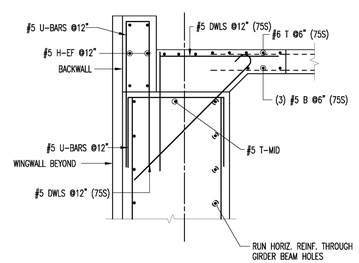

2 SECTION

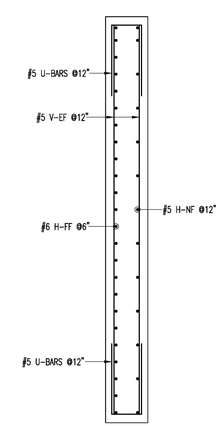

3 SECTION

Drawing Sheet : R01																		BAR LIST
Bar Mark	Qty	Size	Total Length	Type	'A'	'B'	'C'	'D'	'E'	'F'	'G'	'H'	'J'	'K'	'O'	'X'
5A08	50	#5	7'-0"	17		3'-6"	3'-6"									
5A10	41	#5	5'-7"	1	7"	5'-0"							5"			
A04a	2	#5	9'-2"			9'-2"										
Varies To																
A04t	2	#5	11'-10"			11'-10"										
5A01	58	#5	8'-6"	17		2'-10"	2'-10"	2'-10"								
5A05	38	#5	4'-11"	17		2'-1"	9"	2'-1"								
5A06	2	#5	6'-4 X"	3		6'-0"	1'-8 X"						10 X"		1'-5 X"	8'-1 X"
5A08	13	#5	9'-4"	17		4'-4"	8"	4'-4"								
A07a	1	#6	2'-5"			2'-5"										
Varies To																
A07t	1	#6	7'-1"			7'-1"										
6A02	25	#6	5'-6"	2	1'-0"	4'-6"										
6A03	2	#6	5'-6"	12		1'-0"	3'-3"	1'-3"					7 X"		1'-4"	4'-3 X"
6A11	12	#6	8'-7"	17		3'-4"	5'-3"									
6A12	3	#6	6'-8"	17		3'-4"	3'-4"									
6A26	26	#6	6'-11"	17		3'-4"	3'-7"									

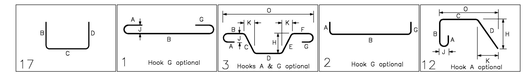

TEST BARS
2-#5x5'-0"
2-#6x5'-0"
2-#5x5'-0"(75S)

ALL MATERIAL ON THIS DRAWING SHALL BE ASTM A615 GRADE 60 U.N.O.

PLACING DRAWING APPROVAL AUTHORITY: VERIFICATION OF DIMENSIONS, DETAILS, ETC ARE REQUESTED WHERE INDICATED. IF EACH VERIFICATION IS NOT NOTED OTHERWISE, IT WILL BE ASSUMED TO BE CORRECT AS SHOWN.

ALL BARS NOTED AS (75S) SHALL BE 2304 GRADE 75 STAINLESS STEEL REBAR

Vermont Agency of Transportation

RECEIVED

Rebar_Submittal_R1_ApprovedAsNoted.pdf

CK'D BY STANTEC **OK'D BY** FDB

November 30, 2017

RESUBMIT NO **Approved AsNoted**

BY C. CARLSON **DATE** 12/5/17

NO EXCEPTION TAKEN	X	Stantec
REVISE AS NOTED RESUBMISSION NOT REQUIRED.		
REVISE AND RESUBMIT		
NOT REVIEWED		

Date: 12/5/17

By: [signature]

This review by Stantec Consulting Services Inc. is for the sole purpose of ascertaining conformance with the general design concept. This review shall not mean that Stantec Consulting Services Inc approves the detail design inherent in the shop drawings, responsibility for which shall remain with the Contractor. Submitting same, and such review shall not relieve the Contractor of his responsibility for errors or omissions in the shop drawing or of his responsibility for meeting all requirements of the Contract Documents. The contractor is responsible for dimensions to be confirmed and correlated at the job site, for information that pertains solely to the fabrication processes or to techniques of construction and installation and for coordination of the work of all subtrades.

No.	Description	Date	By
1	FINAL APPROVAL PRINT	11/29/17	CPS
0	APPROVAL PRINT	11/06/17	CPS

Revisions and Issue Record

The full intent and purpose of this drawing is the placing of reinforcing steel bars ONLY. It is NOT to be used as a means of communication between the Architect, Engineer, Contractor or any other Sub-trades.

THIS DRAWING IS NOT TO BE SCALED.

HarrisRebar Barker Steel — National Strength. Local Service.

DETAILED AT: CANAAN NEW HAMPSHIRE

Project: EAST MONTPELIER BRF 037-1 EAST MONTPELIER VT

Drawing: BRIDGE ABUTMENT 1 REINFORCEMENT

Customer: CCS CONSTRUCTORS

Engineer: STANTEC

Refer to Release:

Date	Drawn	Chkd.	JOB No.	Dwg. No.
11/03/17	CPS		33506530	R01

W:\casmple\Projects\33506530\Placing Drawings\DWGS\R01.dwg